Printed Pages– 7

Roll No. .....

D020711(020)

B. Tech. (Seventh Semester) Examination, Nov.-Dec. 2022

(New Scheme)

(Civil Engg. Branch)

STRUCTURAL ENGINEERING DESIGN-III

Time Allowed : Four hours

Maximum Marks : 100

Minimum Pass Marks : 35

Note : Attempt all questions. Part (a) is compulsory. Attempt any one from part (b) and (c) from each unit. All questions carry equal marks. IS:800-2007 and Steel Tables are permitted in Examination. Assume and mention suitable data if necessary.

Unit-I

1. (a) Explain in detail Bjorhovde's classification of connections. 4

(b) Draw a Bolted Bracket Connection type II using T section. Design a bolted bracket connection to support and End Reaction of 250 kN because of service loads supported by beam. The eccentricity of the end reaction is shown in figure. The steel used is of grade Fe410. Use bolts of grade 4·6. The thickness of bracket plate may be taken as 10 mm. The column section is ISHB 150 @ 300·19 N/m. 16

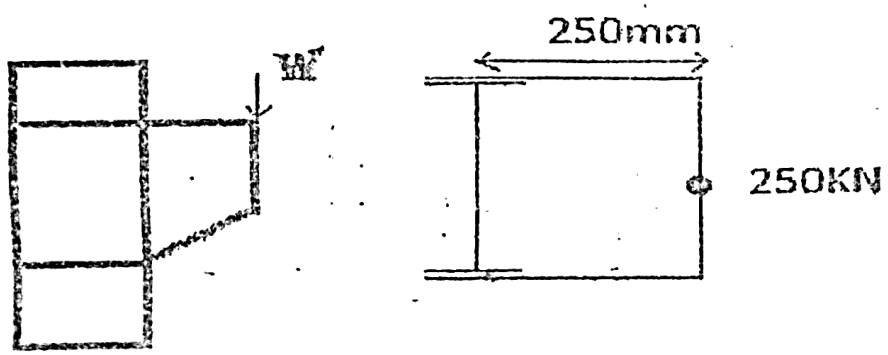

Or

(c) Design a stiffened seat connection for an ISMB 350 @ 514 N/m transmitting and End Reaction of 315 kN due to factored loads to column section ISHB 300 @ 576·8 N/m. The Steel is of grade Fe410 and bolts of grade 4·6. Draw full detailing of the diagram wherever necessary. 16

Unit-II

2. (a) Explain tension field action in plate girder panels. 4

(b) Design a welded plate girder of 24 m span and laterally restrained throughout. It has to support factored uniform load of 100 kN/m throughout the span exclusive of self weight. Design the girder without intermediate transverse stiffener. Design the cross section and use weld size 10 mm. 16

Or

(c) Using post critical method design intermediate transverse Stiffener for an existing plate girder having following data : Maximum B.M. (from factored loads) : 11450 kNm, Maximum Shear Force (from Factored loads) : 1900 kN. Consider span 24 m and spacing to depth ratio 1·4. Use Fe410 grade of steel. Size of Flanges 560 × 50 in mm. Size of web 2000 × 10 in mm. 16

Unit-III

3. (a) Explain slab base and Gusset base with suitable diagram. 4

(b) A Column ISHB 350 @ 661·2 N/m carries an axial compressive factored load of 1800 kN. Design a suitable welded gusset base. The base rest on M20 grade of concrete. Draw full detailing of gusset base. 16

Or

(c) Design a gantry girder to be used in an industrial building carrying an electrically operated overhead travelling crane, for the following data :

Crane capacity	200 kN
Self weight of crane girder exclusive crab assembly	220 kN
Crab Assembly	40 kN
Minimum hook approach	1·5 m
Wheel base	3·5 m
C-C distance between gantry rails	16 m
c-c distance between columns	8 m
Self weight of Rail section	0·25 kNm
Diameter of crane wheels	150 mm
Steel is of grade	Fe410

16

Unit-IV

4. (a) Explain : 4

(i) First Order Moments

(ii) Second Order Moments

(iii) Moment Amplification Factor

(b) Check the adequacy of a beam column ISHB 450 @ 855·4 N/m for the factored loads as shown in figure. The column is a part of non-sway frame with bottom end hinged. The effective length of the member is 3·5 m about both the axes. Steel is of grade Fe410. 16

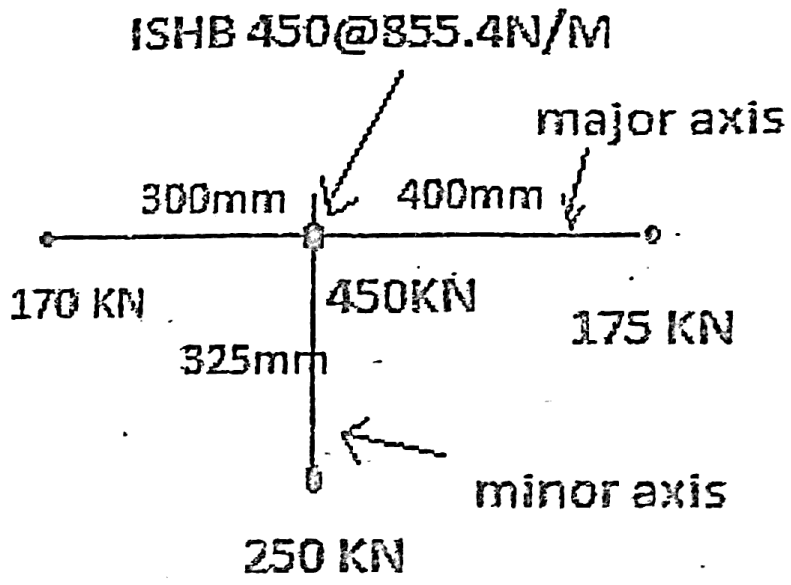

Or

(c) An 10 m long column of an workshop building supports bracket 1·5 m × 1 m at 2 m below the column end supporting a truss as shown in figure. The maximum reaction from the truss is 300 kN. The bracket supports a girder transmitting an end reaction of 165 kN at an eccentricity of 1 m from the centroidal axis of the column. The ends of the column are restrained in position but not in direction. Design the column. The reactions and the loads have been computed from factored loads. 16

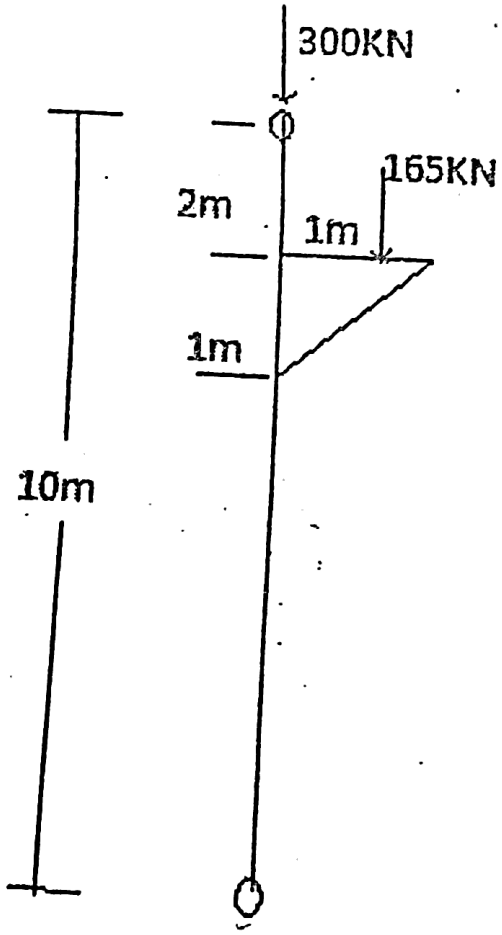

Unit-V

5. (a) Derive the equation for Economic Spacing of Roof Truss. 4

(b) Draw a fink type roof truss with detail. Design the principal rafter of a fink type roof truss for the following data. Design also its connection using 20 mm diameter bolts.

Design compressive load	165 kN
Design Tensile load	50 kN
Length of rafter panel	2·235 m

Grade of Steel Fe410 and grade of bolts 4·6. 16

Or

(c) What are Purlins in a roof truss? Design a strut in a roof truss for the following data :

Length of the Strut	2·235 m
Factored Compressive load	50 kN
Factored Tensile Force	18 kN

Use 20 mm diameter bolts of grade 4·6 and steel Fe410. Prefer ISA section as strut. 16