www.csvtuonline.com

Printed Pages – 8

328313 (28)

BE (3rd Semester)

Examination, Nov.-Dec., 2014

Branch : AEI, CSE, EEE, EI, Et & T, IT, Mechatronics

BASIC ELECTRONICS

Time Allowed : Three Hours

Maximum Marks : 80

Minimum Pass Marks : 28

Note : (i) Part (a) of each question is compulsory and carries TWO marks. And attempt any two parts from part (b), (c) and (d) from each question which carry SEVEN marks each.

(ii) All questions are compulsory. Assume any data if required or if found missing or misprint and mention it with proper justification.

www.csvtuonline.com

www.csvtuonline.com

www.csvtuonline.com

www.csvtuonline.com

Unit-I

Q. 1. (a) Define mobility and conductivity and gives it dimension.

(b) Derive the following expression for a step graded junction.

$$V_0 = V_T \ln \frac{N_A N_D}{n_i^2}$$

(c) Draw the circuit diagram of a forward biased and reverse biased p-n junction diode. Draw the characteristic curve and explain its nature.

(d) Explain in details how depletions region is formed in a PN junction. What is its

www.csvtuonline.com

www.csvtuonline.com

importance for an unbiased p-n junction ? Sketch the variation of space charge, barrier energy mobile and immobile carries. Explain the junction in detail.

Unit-II

Q. 2. (a) Define ripple factor ? Mention the ripple factor for HWR & FWR.

(b) (i) The avalanche diode regulates at 50 V over a range of diode currents from 5 to 40 mA. The supply voltage v = 200 V, calculate R to allow voltage regulation from a load current $I_L = 0$ to I_{max}; the maximum possible value of I_L, what is I_{max} ?

www.csvtuonline.com

www.csvtuonline.com

www.csvtuonline.com

(ii) If 'R is set as in part (i) and load current is set at I_L = 25mA. What are the limits between which 'V' may vary without loss of regulation in the circuit ?

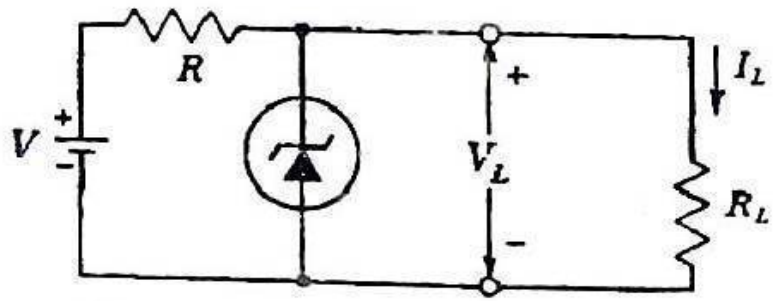

(c) Draw the circuit diagram of a full wave rectifier along with a π type LC filter. Explain its operation and drive the expression for the ripple factor.

(d) Draw the V-I characetristics of Zener diode and with the help of circuit diagram, explain the working of Zener diode based voltage regulator.

www.csvtuonline.com

www.csvtuonline.com

www.csvtuonline.com

Unit-III

Q. 3. (a) Draw the symbol of NPN and PNP transistors. What is the significance of the arrow in this symbol ?

(b) For a PNP transistor biased in active region indicate various electron and hole current components crossing each junction and entering (or leaving) base terminals explain in details and find the expression for 'α'.

(c) Determine the region of operation with justification in following circuits :

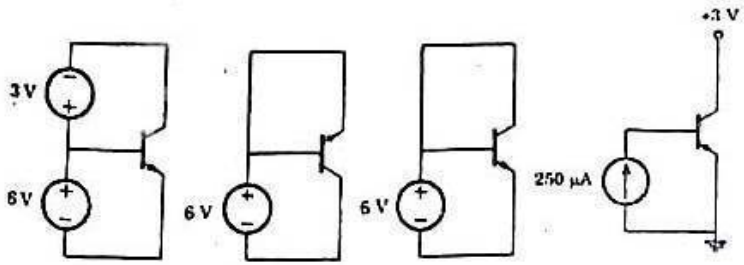

www.csvtuonline.com

www.csvtuonline.com

(d) (i) For the following circuit diagram if β = 100, determine whether or not silicon transition is in saturation region and find the value of I_B and I_C.

(ii) Repeat part (1) with R_E = 2K added.

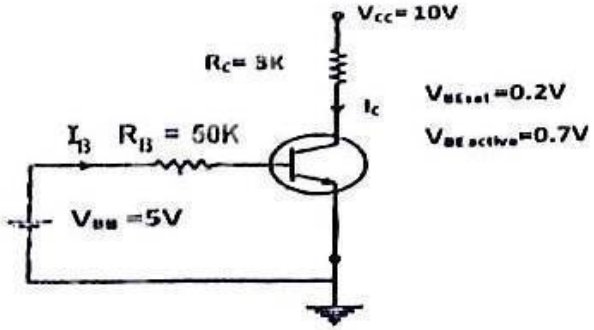

Unit-IV

Q. 4. (a) What is the utility of dc load line ?

(b) Construct the self-bias circuit. Why this circuit called so ? Find the V-I equation for it. And critically comment on percentage variation of Ic hence find S & S'.

www.csvtuonline.com

www.csvtuonline.com

(c) Draw the Darlington amplifier circuit with self bias circuit and find current through resister R_1 and R_2, current through B_1 and B_2 which are base terminal of transistor. current through E_1 and E_2 which are emitters of transition. Also find the volt V_{01} at collector of transfer Q_2 and V_{02} at emitter of transistor Q_2 for the given data :

$R_1 = 82K$, $R_2 = 10K$, $R_{C2} = 1K$, $R_{E2} = 100\Omega$

$V_{BE1} = V_{BE2} = 0.7$ volt

$\beta_1 = 50$

$\beta_2 = 100$

$I_{CBO1} = I_{CBO2} = 0$

And transistor Q_1 and Q_2 operates in active region.

(d) What is thermal runaway ? Explain the diode compensation circuit for compensation of V_{BE}.

www.csvtuonline.com

www.csvtuonline.com

www.csvtuonline.com

Unit-V

Q. 5. (a) Give one advantage and one disadvantage of FET over BJT.

(b) Constructional detail and working principle of EMOSFET and DEMOSFET need to be explained with all necessary diagrams and symbol of each device should be mention thereof.

(c) Sketch transfer characteristics of JFET and show that :

$$g_m = g_{mo}\left[1 - \frac{V_{GS}}{V_P}\right]$$

$$= g_{mo}\sqrt{\frac{I_D}{I_{DSS}}}$$

(d) Explain FET as VVR with neat circuit diagram and mention its application.

www.csvtuonline.com