www.csvtuonline.com

Printed Pages – 7

324353 (25)

BE (3rd Semester)

Examination, Nov.-Dec., 2013

Branch : Electrical Engineering

BASIC ELECTRONICS (NEW)

Time Allowed : Three Hours

Maximum Marks : 80

Minimum Pass Marks : 28

Note : Part (a) of each question carry 2 marks. Part (b), (c), (d) carry 7 marks. Attempt any two from b, c & d. (a) is compulsory.

Unit-I

Q. 1. (a) Draw volt-amphere characteristics of Pn junction diode indicating important terms. 2

www.csvtuonline.com

www.csvtuonline.com

www.csvtuonline.com

(b) (i) Define Transition & Diffusion capacitance. 3

(ii) Derive an expression for transient capacitance (C_T). 4

(c) A silicon diode is carrying a constant current of 1 mA. When the temperature of the diode is 20°C, V_D is found to be 700 mV, if the temperature rises to 40°C, what is the new value of V_D. 7

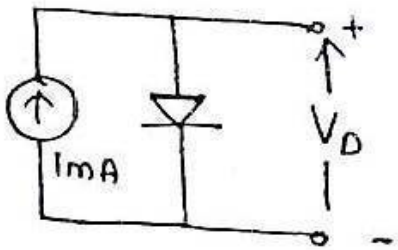

www.csvtuonline.com

www.csvtuonline.com

(d) Derive the standard expression for diode current equation. 7

Unit-II

Q. 2. (a) Define ripple factor? What is its value in case of full wave rectifier 2

(b) Derive an expression for the following : 7

(i) Rms value of load current

(ii) Ripple factor

(iii) Transformer utilization factor

for half wave rectifier.

(c) Explain the working principle of shunt capacitor filter used in output of rectifier; with appropriate charging and discharging curves of capacitor. 7

www.csvtuonline.com

www.csvtuonline.com

www.csvtuonline.com

(d) What value of series resistance (Rs) is required when 10 W, 10 V 1000 mA zener diode are connected in series to obtain 20 V regulated output from a 35 V dc source. 7

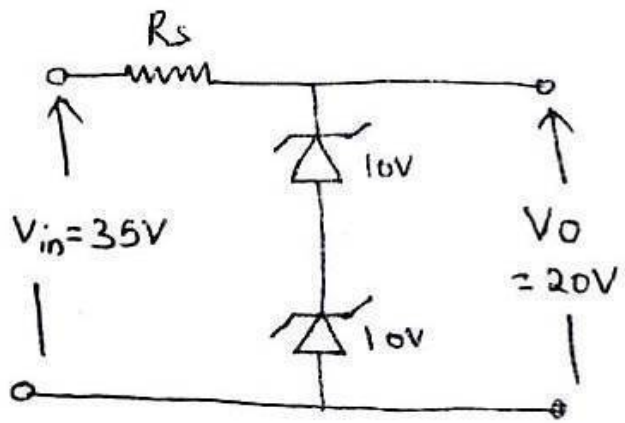

Unit-III

Q. 3. (a) Define early effect ? 2

(b) Explain transistor as an amplifier in common-emitter arrangement. 7

www.csvtuonline.com

www.csvtuonline.com

(c) Define 'α' & 'β' of a transistor. Derive the relation between α & β. 4+3

(d) A transistor is connected in common emitter configuration in which collector supply voltage is 10 V and the voltage drop across resistance R_C connected in the collector circuit is 1 V. The value of R_C = 1000 Ω, if α = 0.94

Determine : 3+4

(i) Collector-emitter voltage

(ii) Base current

Unit-IV

Q. 4. (a) Derive a relation between amplification factor (m) transconductance (g_{ds}), drain resistance (r_d). 2

www.csvtuonline.com

www.csvtuonline.com

www.csvtuonline.com

(b) In an n-channel FET, if I_D = 2.5 mA, V_{DS} = 8V is set. If V_{DD} = 30 V, R_1 = 1 × 10^6 Ω, R_2 = 500 × 10^3 Ω, find the value of R_s. If given that I_{DSS} = 10 mA, V_P = –5 V. 7

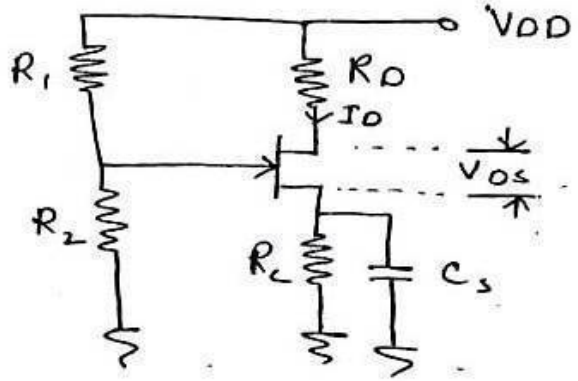

(c) Explain the working principle of a FET. 7

(d) Explain the operation and characteristics of Depletion MOSFET, Enhancement MOSFET. 7

www.csvtuonline.com

www.csvtuonline.com

Unit-V

Q. 5. (a) Define clipper and clamper circuit. 2

(b) Explain the working principle of biased parallel clipper circuit. 7

(c) In a phase shift oscillator, each resistor in RC network is 10 kΩ while each capacitor has a value of 0.01 μF. Find the operating frequency of the circuit. What is the phase shift produced by each R-C section. 7

(d) Explain operation of LC Hartley oscillator. 7

www.csvtuonline.com

www.csvtuonline.com