www.csvtuonline.com

Printed Pages : 7

Roll No. .....

324555(24)

BE (5th Semester)
Examination, Nov.-Dec., 2015

(New Scheme)

Control System Engineering

Time Allowed : 3 hours — *Maximum Marks* : 80
Minimum Pass Marks : 28

Note : (*i*) Part (*a*) of each question is compulsory. Attempt any **two** parts from (*b*), (*c*) and (*d*).

(*ii*) The figures in the right-hand margin indicate marks.

1. (*a*) What are the major advantages of open-loop control systems? 2

(*b*) Consider the liquid-level system shown in the figure. In the systems $\overline{Q}_1$ and $\overline{Q}_2$ are steady-state inflow rates and $\overline{H}_1$ and $\overline{H}_2$ are steady-state heads.

www.csvtuonline.com

www.csvtuonline.com

www.csvtuonline.com

The quantities q_{i_1}, q_{i_2}, h_1, h_2, q_1 and q_0 are considered small. Obtain a state-space representation for the system when h_1 and h_2 are the outputs and q_{i_1} and q_{i_2} are the inputs : 7

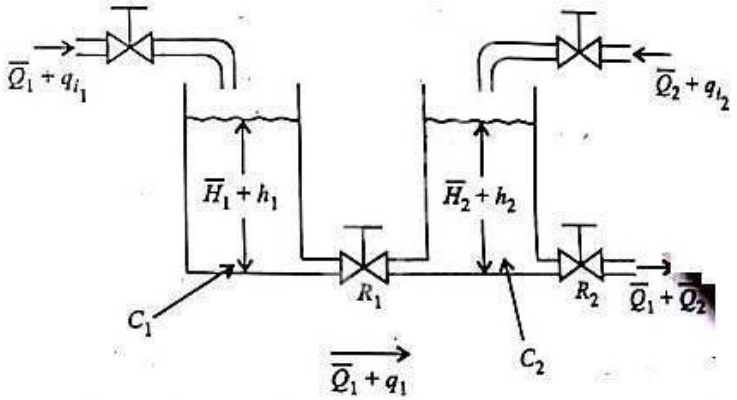

(*c*) A rotational mechanical system is shown in the figure. Determine system equations and hence find electrically analogous system from torque-current analog : 7

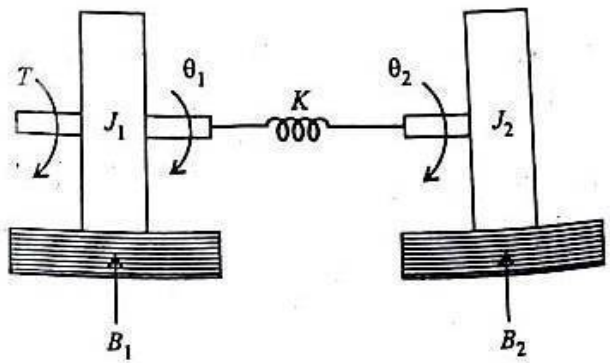

www.csvtuonline.com

www.csvtuonline.com

(*d*) Draw the thermal system and obtain its transfer function. 7

2. (*a*) Write the torque balance equations for an ideal inertia and ideal dash pot. 2

(*b*) Explain the construction and working of a synchro. 7

(*c*) Obtain $\frac{C(s)}{R(s)}$ for the block diagram shown in the figure using reduction techniques : 7

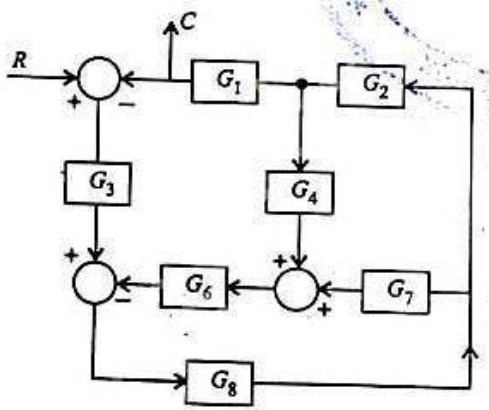

(*d*) In the signal flow graph shown in the figure, determine gain C/R : 7

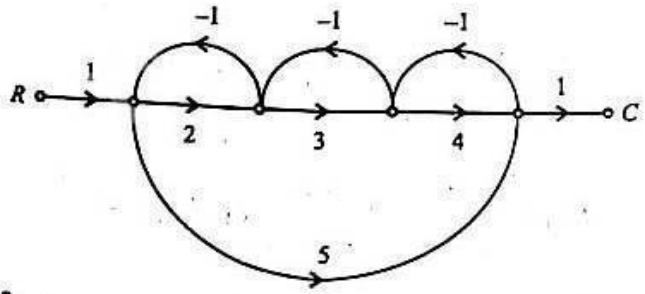

(Turn Over)

www.csvtuonline.com

www.csvtuonline.com

www.csvtuonline.com

3. (*a*) For type-2 system, what is the value of steady-state error due to ramp input? 2

(*b*) For $G(s)\,H(s) = \frac{K}{[s(s+1)\,(s+3)]}$, find the point of the root locus with the $j\omega$-axis. 7

(*c*) Calculate M, D and K from the given Fig. (*a*) and Fig. (*b*). The system was initially relaxed : 7

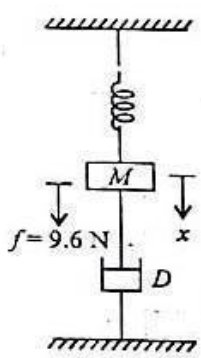

Fig. (*a*)

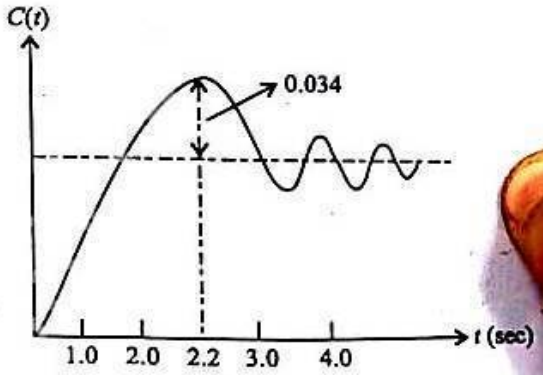

Fig. (*b*)

(*d*) Consider the system whose closed-loop transfer function is

$$\frac{C(s)}{R(s)} = \frac{1}{s^2 + 2\xi s + 1} \quad (0 < \xi < 1)$$

Compute $\int_0^\infty C^2(t)\,dt$ for a unit impulse input. 7

(Continued)

www.csvtuonline.com

www.csvtuonline.com

4. (*a*) The low frequency and high frequency asymptotes of Bode magnitude plot are respectively –60 dB/decade and –40 dB/decade. What is the type of the system? 2

(*b*) For a type-2 system with transfer function

$$G(s)\,H(s) = \frac{1}{s^2(1+Ts)}$$

obtain its polar plot. 7

(*c*) The Nyquist plot of a unity feedback system having open-loop transfer function

$$G(s) = \frac{K(s+3)\,(s+5)}{(s-2)\,(s-4)}$$

for $K = 1$ as shown in the figure. For the system to be stable, what is the range of values of K? 7

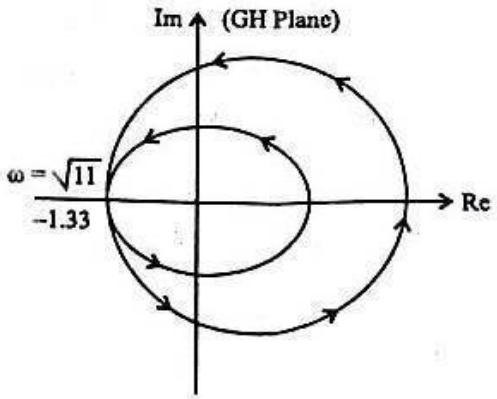

(Turn Over)

www.csvtuonline.com

www.csvtuonline.com

www.csvtuonline.com

(*d*) Find the transfer function of a system having Bode plot shown in the figure : 7

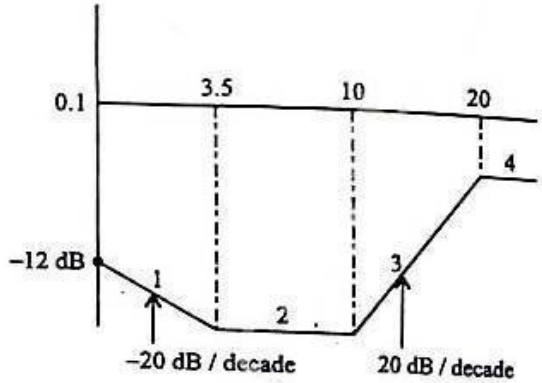

5. (*a*) What are the advantages of phase lead network?

(*b*) Explain design procedure for cascade lag-lead compensator by using root locus.

(*c*) Explain procedure for phase lead compensating networks by using Bode plot.

(*d*) Consider the system whose feed forward transfer function is given by

$$G(s) = \frac{K}{s(s+0.29)}$$

(Continu

www.csvtuonline.com

www.csvtuonline.com

[7]

Design a lag compensator so that the dominant poles of the closed-loop system are located at $s = -1 \pm j$ and steady-state error to a unit ramp input is less than 0.2. 7

www.csvtuonline.com

www.csvtuonline.com