www.csvtuonline.com

I No.....

324554 (24)

Diploma in B.E. (Fifth Semester)
Examination, 2015
(Branch Elect.)
(New Course)
INTEGRATED CIRCUITS

: *Three Hours*] [*Maximum Marks : 80*
[*Minimum Pass Marks : 28*

: Part (a) of each unit is compulsory, Attempt any *two* parts among (b), (c) and (d) of each Unit.

UNIT-I

(a) Define "slew rate" and "PSRR" ? 2

(b) Draw an equivalent Circuit daigram for OP-AMP? Write the difference between ideal and practical value of OP-AMP. 7

(c) For an OP-AMP the value of R_F and R_1 are 100 kΩ and 1 kΩ respectively. It is an inverting Amp. with input offset voltage drift of 14 μv/°C and input offset current drift of 0·5 nA/°C. The Amp. Null at 25°C. Calculate the Error voltage E_V and the output voltage at 45°C if the input is 7 mV d.c. ? 7

www.csvtuonline.com

www.csvtuonline.com

www.csvtuonline.com

www.csvtuonline.com

(d) The Circuit shown in figure dual input, balance output differential Amp. configuration assume silicon transister with $h_{ie} = 2{\cdot}8$ KΩ $V_{AE} = 0{\cdot}7$ for silicon.

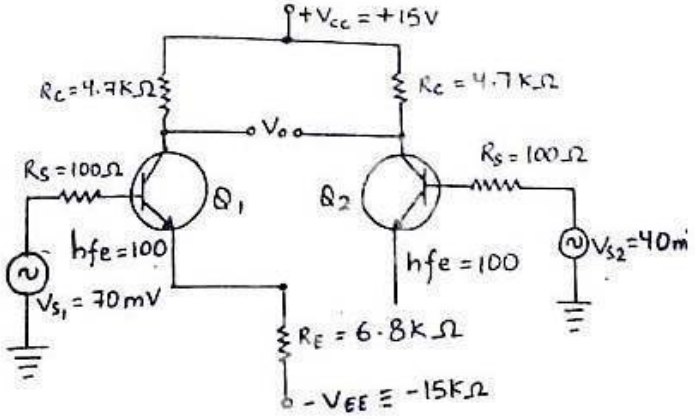

To calculate :

(i) I_{CQ} and V_{CEQ}.

(ii) Differential gain [A_d].

(iii) Common mode green [A_c].

(iv) CMRR.

(v) Output voltage if V_{S_1} = 70 mV peak to peak at 1kHz and V_{S_2} = 40 mV peak to peak at 1kHz. 7

www.csvtuonline.com

www.csvtuonline.com

UNIT-II

2. (a) What is window detector ? 2

(b) Explain the basic principle of instrumentation Amp. with some useful application and advantages. 7

(c) To explain it : [any *two*] 7

(i). Integrator Circuit and its application

(ii) Norton's AMP.

(iii) Voltage follower

(d) Find the expression of V_0/V_i shown in figure below as :

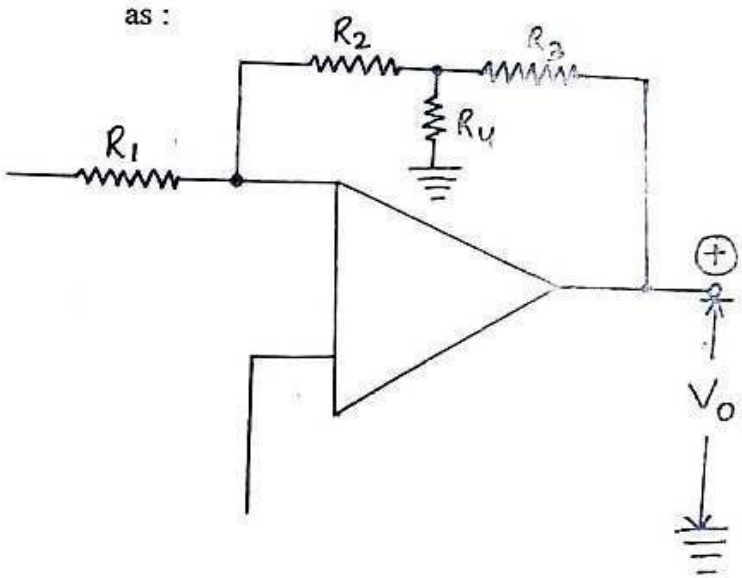

www.csvtuonline.com

www.csvtuonline.com

www.csvtuonline.com

UNIT-III

(a) Define "Sampling period" and "holding period" ? 2

(b) Explain the triangular wave generator Cirtuit using OP-AMP. Also find the equation of output freq. of oscillation. 7

(c) Explain the working of monostable multivibrator with suitable diagram. Also derive the equation for gate width. 7

(d) Determine the analog output of a 4 bit, R-2R Ladder with D/A converter for all possible input assuming $R_f = 2^3 \cdot R$ and $V_r = -8V$. 7

UNIT-IV

(a) Define Quasi stable state. 2

(b) In a stable multivibrator of figure below : $R_A = 4{\cdot}7\ K\Omega$, $R_B = 1\ K\Omega$, $C = 1\mu F$ and $C_1 = 0{\cdot}01\mu F$.

www.csvtuonline.com

www.csvtuonline.com

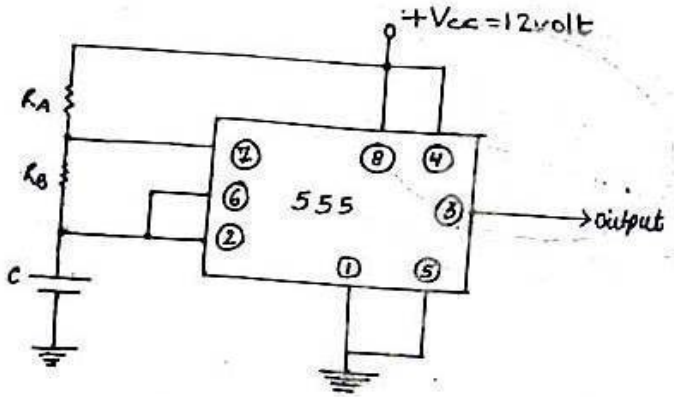

To determine ;

7

(i) Positive pulse width (T_c)

(ii) Negative pulse width (T_d)

(iii) Freq. of oscillation

(iv) Duty cycle.

(c) Give the block diagram of IC-566 VCO and explain it operation. 7

(d) Draw the block daigram of PLL and explain its operating principle and one application of PLL system. 7

www.csvtuonline.com

www.csvtuonline.com

www.csvtuonline.com

UNIT-V

5. (a) List the various part of regulated power supply. 2

(b) Write short notes on "Series voltage regulator" and "Shunt volt regulator" ? 7

(c) Determine the minimum and maximum output voltage of voltage regulator show. Figure and assume I_Q to be constant at 10 mA. ? 7

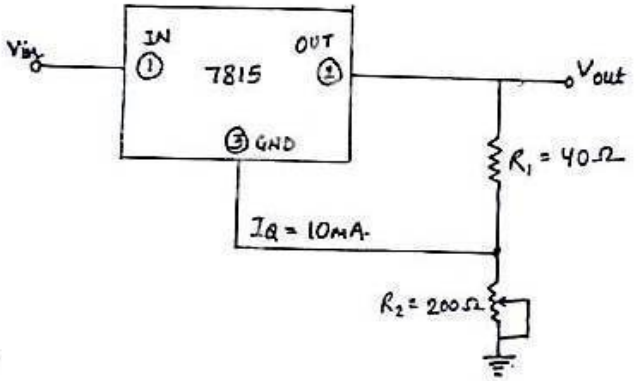

(d) Explain along with net block daigram of general purpose in regulator IC-723. 7

www.csvtuonline.com

www.csvtuonline.com