www.csvtuonline.com

Printed Pages – 7 Roll No. : 3112413042

324554(24)

B. E. (Fifth Semester) Examination, Nov.-Dec. 2016

(New Scheme)

(Elect. Branch)

Specialization : Electrical Engg.

INTEGRATED CIRCUITS

Time Allowed : Three hours

Maximum Marks : 80

Minimum Pass Marks : 28

Note : *Answer all questions. Part (a) is necessary of all questions and attempt any two options (b), (c) and (d).*

Unit-I

1. (a) Draw the equivalent ckt diagram of Op-Amp. 2

(b) Define the following terms : (any four) 7

www.csvtuonline.com

www.csvtuonline.com

www.csvtuonline.com

www.csvtuonline.com

(i) PSSR

(ii) CMRR

(iii) Slew Rate

(iv) Input offset current

(v) Input bias current

(c) The figure (1) show dual Input, balance output differential Amp. Configuration.

Assuming silicon transistor with $h_{ie} = 2{\cdot}8\ k\Omega$

Calculate :

(i) Q point

(ii) A_d

(iii) A_c

(iv) CMRR

(v) Output if $Vs_1 = 70$ mV peak to peak at 1 kHz

$Vs_2 = 40$ mV peak to peak at 1 kHz

[$V_{BE} = 0{\cdot}7\ V\ (si)$] and $h_{fe} = 100$ 7

www.csvtuonline.com

www.csvtuonline.com

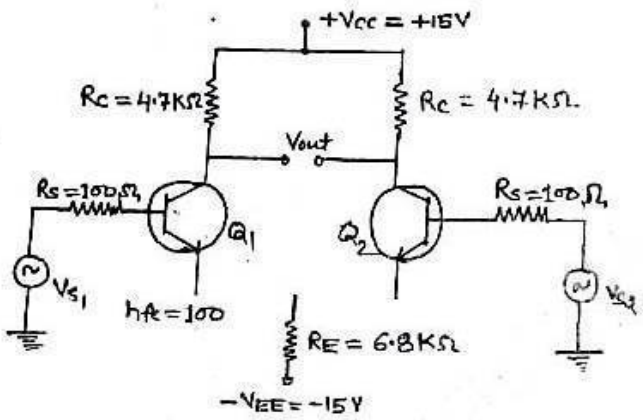

(d) The following figure show a differential Amp. using ideal op-Amp.

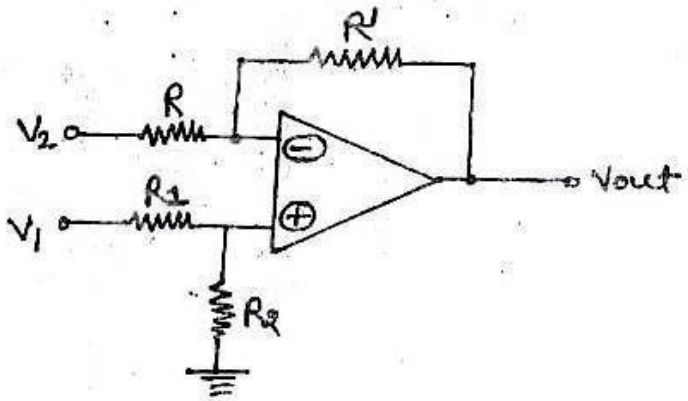

(i) find the output voltage (V_0)

(ii) show that the output corresponding to common Mode Voltage

www.csvtuonline.com

www.csvtuonline.com

www.csvtuonline.com

$$V_{cm} = \left[\frac{V_1 + V_2}{2}\right] \text{ is zero if } \frac{R'}{R} = \frac{R_2}{R_1}$$

find the output in his case.

(iii) find the CMRR of Op-Amp if $\frac{R'}{R} \neq \frac{R_2}{R_1}$. 7

Unit-II

2. (a) Define window detector. 2

(b) Given a Non Inverting summing Amp. ckt and the output voltage. Equation and find out the relationship between R_f and R. 7

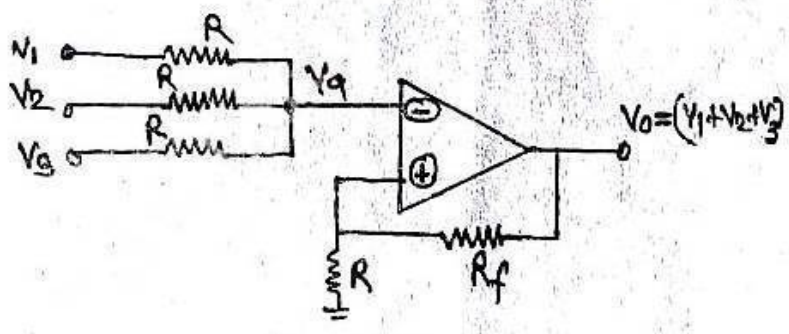

(c) Explain the basic principle of Instrumentation Amp. with some useful application and advantage. 7

(d) Explain the Norton's Amp. in detail. 7

www.csvtuonline.com

www.csvtuonline.com

Unit-III

3. (a) Define "Sampling period" and "Holding period". 2

(b) Determine the analog output of 4-bit R- 2R Ladde D/A Convertor for all possible Input assumin $R_f = 2^3 R$, $V_r = -8$ volt. 7

(c) Describe the construction Mechanism and principle of operation of a dual slope Intigrator type ADC. 7

(d) Draw and explain the schmitt trigger ckt with output waveform and hysteresis curve. 7

Unit-IV

4. (a) Define duty cycle. 2

(b) Draw the Internal block-diagram of IC-555 Timer and explain its operation. 7

(c) Define Quasi stable state and also draw the ckt diagram of an astable Multivibrator to generate the frequency of 1 kHz and duty cycle of 75%. $[\, c = 0{\cdot}1\,\mu F \,]$ 7

www.csvtuonline.com

www.csvtuonline.com

www.csvtuonline.com

(d) Give the block diagram for IC-566 V_{co} and explain its operation. 7

Unit-V

5. (a) Write the characteristics of three-terminal voltage regulator. 2

(b) List the performance parameter of voltage regulator. 7

(c) The zener diode used in simple shunt voltage Regulator ckt has a reverse break down voltage of 10 volt if series current Limiting Resistor $R_S = 100\,\Omega$

(i) Find the d. c. unregulated input voltage when zener current = 15 mA and load current = 50 mA.

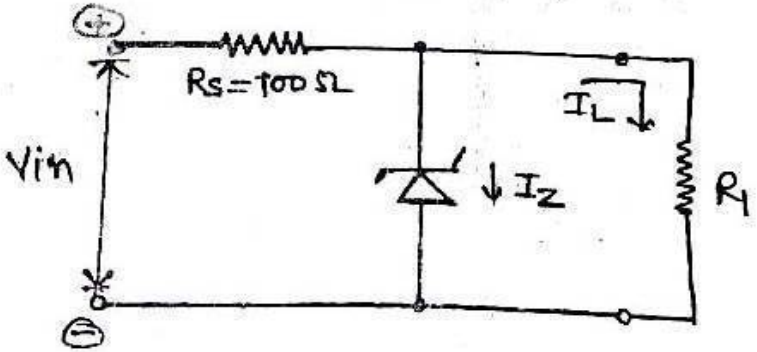

www.csvtuonline.com

www.csvtuonline.com

www.csvtuonline.com

(ii) Find the zener diode current for d. c. Input voltage of 30 volt and load current = 50 mA. 7

(d) Draw and explain schematic diagram for IC-723 Voltage Regulator. 7

www.csvtuonline.com

www.csvtuonline.com