Assign the same numbers shown in the above figure in symbols of PLC logic. 2

(*b*) Make a ladder diagram for the following sequence :

CSVTUonline.com

(*i*) When SW_1 (switch) is closed, CR_1 goes ON

(*ii*) After CR_1 goes ON, SW_2 can turn CR_2 ON

(*iii*) When CR_2 goes ON, PL_1 (Pilot light) goes OFF

(*iv*) If CR_1 is ON and CR_2 is OFF, SW_3 can turn ON CR_3.

Explain each step involved and make use of appropriate symbols. 7

(*c*) What are general characteristics of registers in a PLC ? Explain functions of holding registers and input registers. 7

(*d*) Explain the operation of a single-input timer used in PLC. Represent the timer in block format and coil format. 7

CSVTUonline.com

325652(25)

BE (6th Semester)

Examination, April-May, 2016

(New Scheme)

Modern Instrumentation Techniques

CSVTUonline.com

Time Allowed : 3 hours *Maximum Marks* : 80

Minimum Pass Marks : 28

Note : (*i*) Answer **all** questions. Part (*a*) is compulsory. Answer any **two** parts from (*b*), (*c*) and (*d*).

(*ii*) The figures in the right-hand margin indicate marks.

CSVTUonline.com

1. (*a*) The resistance of a circuit is found by measuring current flowing and power fed into the circuit. Find the limiting error in measurement of resistance when the limiting errors in power and current measurement are respectively ±1.5% and ± 1.0%. 2

(*b*) What are the major sources of errors in current transformers ? Describe the design and constructional features used to reduce the errors in current transformers. 7

(*c*) Explain the Absolute Null Method for testing a potential transformer. 7

(*d*) Why secondary of a current transformer should never be open circuited with primary energized ? CSVTUonline.com

A 100/5 A, 50 Hz current transformer has a secondary burden comprising a non-inductive impedance of 1.6 ohms. The primary winding has one turn. Calculate the flux in the core and ratio error at full load. Neglect leakage reactance and assume the iron loss in the core to be 1.5 watts at full load. The magnetizing mff is 100 A. 3+4=7

2. (*a*) Differentiate between (any two) transducers and inverse transducers. 2

(*b*) Explain the construction of wire wound strain gauges and derive the expression for gauge factor. 7

(*c*) Discuss various inductive transducers explaining their principle of operation. Support your answers with neat sketches. 7

(*d*) Draw the equivalent circuit of piezo-electric transducer and derive a condition to show that output voltage is independent of frequency at high frequencies when the transducer is loaded by a capacitance C_L and resistance R_L. 7

CSVTUonline.com

3. (*a*) A five-bit converter is used for a d.c voltage range 0–10 V. Find exact range of converter and error. 2

(*b*) Describe in detail the successive approximation method of analog to digital conversion. 7

(*c*) Explain with the help of a neat diagram, the working of a Multichannel Data Acquisition System. 7

CSVTUonline.com

(*d*) Write a short note on Optical Encoders. 7

4. (*a*) Give two differences between a PLC and a data processing computer. 2

(*b*) Discuss with a neat diagram, the components of an overall PLC system. 7

(*c*) What is ladder diagram ? Explain any four ladder construction limitations (improper representations in ladder diagram). 7

(*d*) Discuss different types of input and output devices that can be connected to I / O modules of a PLC. Give two examples in each case. 7

5. (*a*) For the logic gate assembly shown in Figure, draw PLC logic diagram

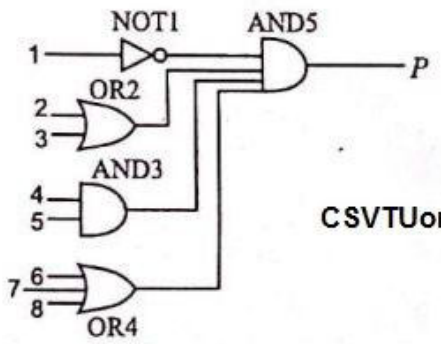

CSVTUonline.com