www.csvtuonline.com

Printed Pages – 8

# 324811 (24)

BE (8th Semester)

Examination, April-May, 2012

Branch : Electrical

## MODERN CONTROL SYSTEM

*Time Allowed : Three Hours*

*Maximum Marks : 80*

*Minimum Pass Marks : 28*

**Note :** Attempt three questions from each unit. Part (a) is compulsory.

### Unit-I

Q. 1. (a) Define autonomous system. 2



www.csvtuonline.com

www.csvtuonline.com

www.csvtuonline.com



(b) Determine describing function for the following non lineary. 7

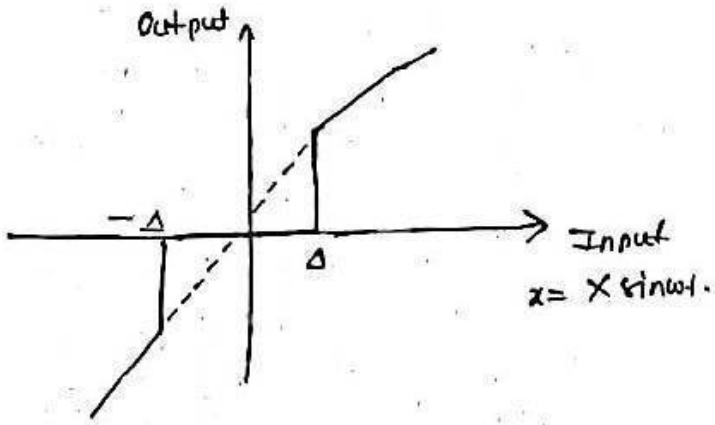


(c) A linear autonomous system is described by the state equation $\dot{x} = Ax$ 7

$$A = \begin{bmatrix} -4k & 4k \\ 2k & -6k \end{bmatrix}$$

Find the restriction on the parameter k to guarantee stability of the system.



www.csvtuonline.com

www.csvtuonline.com



(d) Consider the system shown in Fig. Use the describing function technique to investigate the possibility of limit cycle in this system. If a stable limit cycle is predicted determine its amplitude and frequency. 7

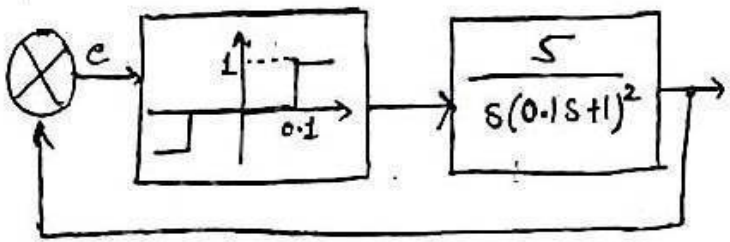


Unit-II

Q. 2. (a) Define controllability and observability. 2



www.csvtuonline.com

www.csvtuonline.com

www.csvtuonline.com



(b)

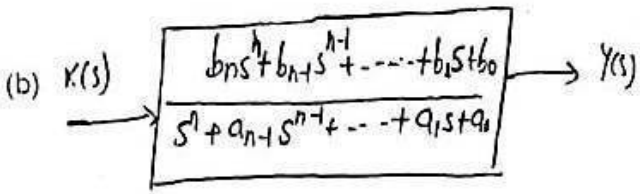


Obtain controllable canonical form for the above system and also draw the block diagram. 7

(c) Consider the system shown in Fig. and investigate whether it is observable or not. 7

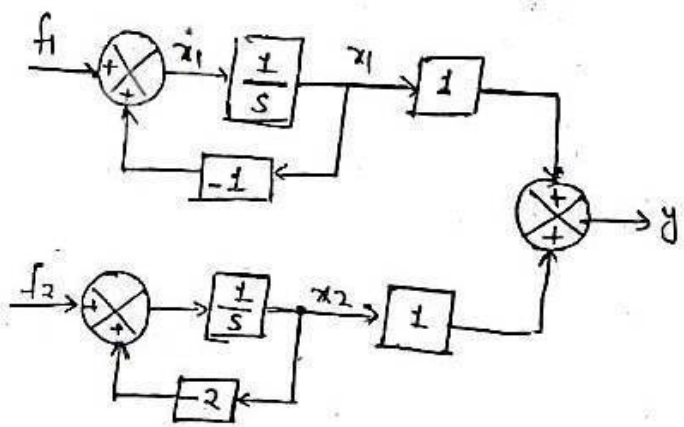




www.csvtuonline.com

www.csvtuonline.com



(d) Find $f(A) = A^{10}$ for : 7

$$A = \begin{bmatrix} 0 & 1 \\ -2 & -3 \end{bmatrix}$$

## Unit-III

Q. 3. (a) What is state observer ? 2

(b) Explain control system design via pole placement. 7

(c) Consider a system defined by : 7

$$\dot{x} = Ax + Bu$$

$$y = Cx$$

where $A = \begin{bmatrix} 0 & 1 \\ -2 & -3 \end{bmatrix}$, $B = \begin{bmatrix} 0 \\ 2 \end{bmatrix}$, $C = [1 \;\; 0]$

It is desired to have eigen values at $-3$ and $-5$ by using a state feedback control $u = -kx$. Determine the necessary feedback gain matrix k and control signal u.



www.csvtuonline.com

www.csvtuonline.com

www.csvtuonline.com



(d) Consider the double integrator system : 7

$$\ddot{y} = u$$

Design a state observer such that the eigen values of the observer gain matrix are $\mu_1 = -2 + j3.464$, $\mu_2 = -2 - j3.464$.

## Unit-IV

Q. 4. (a) Explain signal reconstruction. 2

(b) Explain the relationship between $\tau$ and s-domain. 7

(c) What is pulse transfer function ? Obtain the pulse transfer function for the given discrete data control system with samples in the forward path. 3+4



www.csvtuonline.com

www.csvtuonline.com



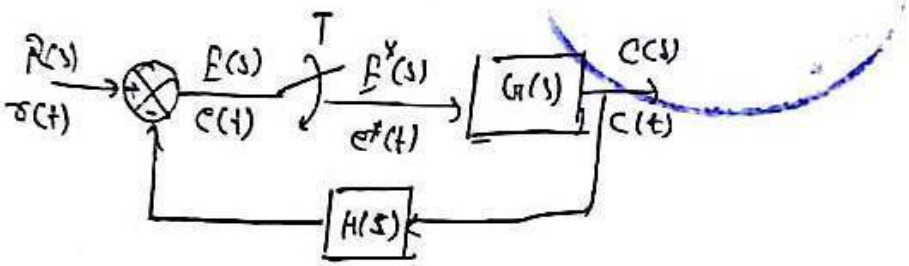


(d) Determine the stability of a discrete data system having characteristic equation 7

$$z^3 + 3.3z^2 + 4z + 0.8 = 0$$

By Jury's stability test.

**Unit-V**

Q. 5. (a) Explain optimal control in brief. 2

(b) Derive the discrete Euler-Lagrange equation. 7



www.csvtuonline.com

www.csvtuonline.com

www.csvtuonline.com



F

(c) Find the optimal control $u^\circ(k)$, $k = 0, 1, 2 \ldots 10$ such that the performance index 7

$$J = \frac{1}{2}\sum_{k=0}^{10}\left[x^2(k) + 2u^2(k)\right]$$

is minimized, subject to the equality constrant $x(k+1) = x(k) + 2u(k)$

The initial state is $x(0) = 1$ and the final state is $x(1) = 0$.

(d) Derive the matrix Riccati equation. 7



www.csvtuonline.com