PB_1 is released. Also, activation of CR_1 relay has to turn off a green light and turn on a red light. A push button PB_2 depressed should cause CR_1 relay to be de-energized. 7

CSVTUonline.com

(d) Discuss various selection criteria that must be considered for selection of a suitable PLC for a specific process control system. 7

5. (a) What do you mean by field bus ? 2

(b) Explain in brief the working of a distributed control system. Support your answer with a neat diagram. 7

(c) What are the different types of displays available on video screen of the DCS for plant information ? Explain each of them in brief. 7

(d) How is DCS integrated with PLCs and other computers ? 7

CSVTUonline.com

328876(28)

B. E. (Eighth Semester)
EXAMINATION, April-May, 2015
(Old Scheme)
(Branch : EEE, ET & T)
INDUSTRIAL AUTOMATION
(Elective—III)

Time : Three Hours] [*Maximum Marks : 80*

CSVTUonline.com [*Minimum Pass Marks : 28*

Note : (i) Answer all the *five* questions.

(ii) Part (a) is compulsory and carries 2 marks, answer any *two* from remaining (b), (c) and (d) Parts, each carrying 7 marks.

1. (a) Give the two analog standards that are commonly used as a means of representing range of variables in control systems for electrical and pneumatic systems. 2

(b) What is process control ? Give an example and explain the elements of process control block diagram. 7

CSVTUonline.com

(c) What do you mean by analog control and digital control as applied to process control systems ? Explain in brief any *three* methods of digital control. 7

CSVTUonline.com

(d) Explain in brief the measures of control system performance in the event of set point change and transients in the case of damped response and cyclic response. What are the two common types of cyclic tuning criteria used in process control ? 7

2. (a) A controller outputs a 4 to 20 mA signal to control motor speed from 140 to 600 r. p. m. with a linear dependence. Calculate current corresponding to 310 r. p. m. 2

(b) Explain the following process characteristics : 7

(i) Process equation

(ii) Process load

CSVTUonline.com

(iii) Process lag

(iv) Self-regulation

(c) Explain in brief two position mode and floating control mode as applied to process control systems. 7

(d) What do you mean by direct and reverse action of a controller ? Explain in brief the proportional control, integral and derivative control modes. 7

3. (a) Enlist the general features of an analog controller. 2

(b) For the op-amp. circuit given below Fig. deduce the mathematical equations and identify the controller mode 7

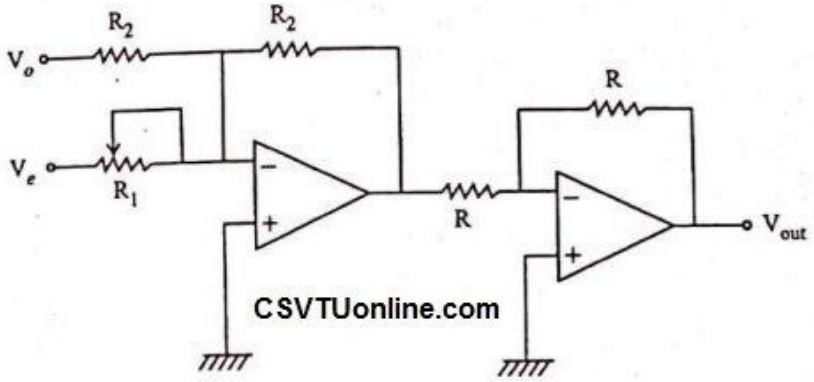

CSVTUonline.com

where the notations used have their usual meanings.

(c) Explain in brief PI controller mode and its implementation using op-amps. 7

(d) Explain in brief general features of pneumatic controllers. 7

4. (a) Give advantages of programmable logic controllers. 2

CSVTUonline.com

(b) Draw the architecture of PLC and explain each component in brief. 7

(c) What is ladder diagram ? Draw and explain the ladder diagram to implement the following : Push button PB_1 pressed, CR_1 (control relay) coil is energized, closed CR_1 contacts and latches CR_1 so that CR_1 coil continues to be energized even if