CSVTUonline.com

328551(28)

B. E. (Fifth Semester) Examination, April-May 2016

(New Scheme)

(Et & T Engg. Branch)

LINEAR INTEGRATED CIRCUITS & APPLICATIONS

Time Allowed : Three hours

CSVTUonline.com

Maximum Marks : 80

Minimum Pass Marks : 28

Note *: Attempt all questions. Part (a) is compulsory from each question. Attempt any two parts from part (b), (c) and (d). Draw neat labelled diagrams wherever necessary.*

CSVTUonline.com

1. (a) State two advantages of using active current sources as opposed to passive current sources to provide emitter biasing in a differential amplifier design. 2

CSVTUonline.com

(b) Draw and explain dual input balanced output differential amplifier circuit. Also derive expression for voltage gain, input and output resistance and CMRR for circuit using γ-parameters. 7

CSVTUonline.com

(c) For the circuit shown with $R_i = \infty$ show that : 7

$$Y_{OF} = \frac{1}{R_O}\left(1 - Av\frac{R}{R+R_1}\right) + \frac{1}{R+R_1}$$

CSVTUonline.com

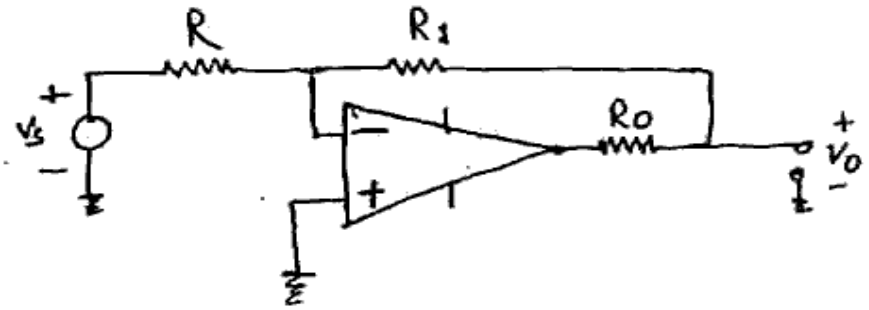

fig.

(d) For an op-amp the values of R_F and R_j are 100 kΩ and 1 kΩ respectively. It is an inverting amplifier with input offset voltage drift of 14 μV/°C and

input offset current drift of 0·5 nA/°C. The amplifier is nulled at 25°C. Evaluate the error voltage and the ouput at 45°C, if the input is 7 mVdc. 7

2. (a) Mention the disadvantages of ideal differentiator circuits? 2

CSVTUonline.com

(b) The circuit shown is a differential amplifier using an ideal op-amp.

(i) Find the output voltage V_0.

(ii) Show that the output corresponding to common mode voltage

$V_C = \frac{1}{2}(V_1 + V_2)$ is equal to zero if

CSVTUonline.com

$$\frac{R_1}{R} = \frac{R_3}{R_2}.$$

Find output voltage in this case.

(iii) Find the common mode rejection ratio of amplifier if

$$\frac{R_1}{R} \neq \frac{R_3}{R_2}.$$ 7

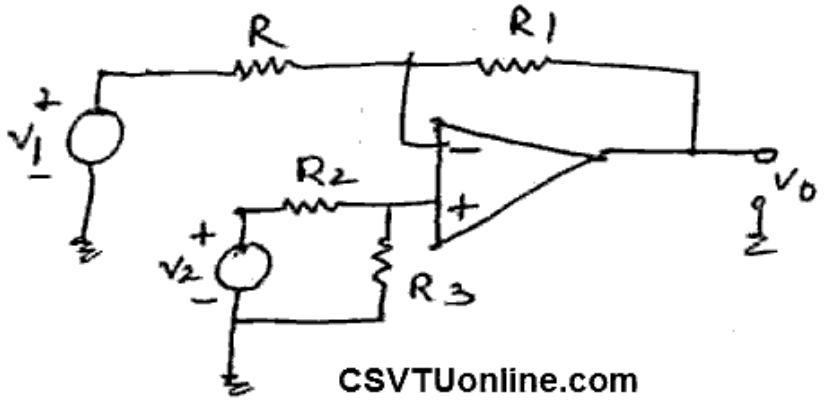

CSVTUonline.com

fig

(c) Why hysteresis is desirable in a Schmitt trigger? Sketch a regenerative comparator system and explain its operation? What parameters determine the loop gain and hysteresis? Sketch transfer characteristics and indicate hysteresis? 7

CSVTUonline.com

(d) (i) Design a differentiator to differentiate an input signal that varies from 200 Hz to 1 kHz.

(ii) Draw output waveform for sine wave input of 1 V peak and of 600 Hz. 7

3. (a) What do you mean by Dual slope ADC? 2

(b) Explain the following with reference of DAC : 7

(i) Resolution

(ii) Accuracy

(iii) Conversion time

(iv) Settling time

(v) Monotonicity

(c) Draw neat diagram for 4 bit R-2R ladder and weighted resistor type D/A converter. Compare them? 7

CSVTUonline.com

(d) Explain the successive approximation A/D converter technique with the help of block diagram. 7

4. (a) Define Line Regulation and Load Regulation? 2

(b) Discuss how a three terminal voltage regulator IC be employed to realize an adjustable voltage output. For the voltage regulator shown below, determine the minimum and maximum output voltages. A constant 1·25 V is maintained by the regulator between the output terminal and the adjustment terminal. The constant current at adjustment terminal is 50 μA. 7

CSVTUonline.com

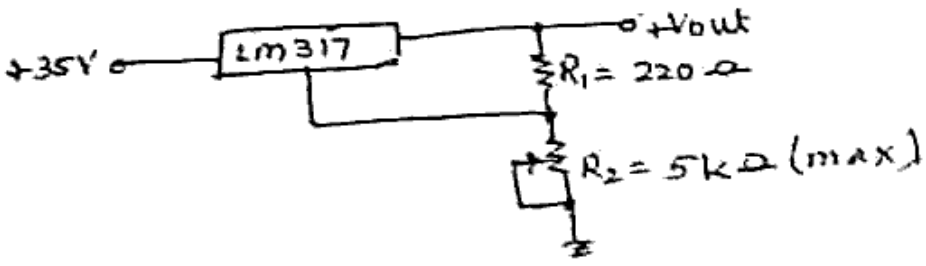

CSVTUonline.com

fig.

(c) Explain short circuit protection and fold back current limiting with characteristics for a regulator. 7

(d) Differentiate between series and shunt regulator with reference to block diagram and circuit diagram and explain the operation of each. 7

5. (a) What do you mean by lock-in range and capture range? 2

CSVTUonline.com

(b) Draw and explain the block diagram of Phase Locked Loop. 7

(c) With the help of block diagram explain the operation AM detector using PLL. 7

(d) Explain the following application of the multiplier: 7

(i) Squaring circuit

(ii) Square rooting circuit

(iii) Voltage divider

CSVTUonline.com