CSVTUonline.com

328651(28)

BE (6th Semester)

Examination, April - May, 2016

(New Scheme)

Digital Signal Processing

CSVTUonline.com

Time Allowed : 3 hours *Maximum Marks* : 80

Minimum Pass Marks : 28

Note : (*i*) Part (*a*) of each question is compulsory. Attempt any **two** parts from (*b*), (*c*) and (*d*).

(*ii*) The figures in the right-hand margin indicate marks.

CSVTUonline.com

---

1. (*a*) Write any two properties of DTFT along with the proofs. 2

(*b*) A discrete-time system has an impulse response $h(n)$ given by

$$h(n) = \frac{1}{2}\delta(n) + \delta(n-1) + \frac{1}{2}\delta(n-2)$$

Find the system frequency response $H(e^{j\omega})$. Plot the magnitude and phase response for $-\pi \le \omega \le \pi$. 7

CSVTUonline.com

(*c*) By means of circular convolution, determine the response of the FIR filter with the impulse response $h(n) = \{1, 2, 3\}$ and input sequence $x(n) = \{1, 2, 2, 1\}$. 7

(*d*) Given that $x(n) = 2^n$ and $N = 8$. Find $X(k)$ using DIT FFT Algorithm. 7

CSVTUonline.com

2. (*a*) Define Recursive and Non-recursive structures. 2

(*b*) Obtain direct form and parallel form realization for the following system : 7

$$y(n) = -0.1y(n-1) + 0.2y(n-2) + 3x(n) + 3.6x(n-1) + 0.6x(n-2)$$

(*c*) Obtain direct form realization with minimum number of multipliers 7

$$H(z) = 1 + \left(\frac{1}{3}\right)z^{-1} + \left(\frac{1}{4}\right)z^{-2} + \left(\frac{1}{4}\right)z^{-3} + \left(\frac{1}{3}\right)z^{-4} + z^{-5}$$

CSVTUonline.com

(*d*) Determine the lattice structure realization of an FIR system with transfer function 7

$$H(z) = 1 + \left(\frac{13}{24}\right)z^{-1} + \left(\frac{5}{8}\right)z^{-2} + \left(\frac{1}{3}\right)z^{-3}$$

3. (*a*) What is Gibbs phenomenon? 2

(*b*) Design an ideal band-pass filter with the frequency response

$$H_d(e^{j\omega}) = \begin{cases} 1 \text{ for } \frac{\pi}{4} \le |\omega| \le \frac{3\pi}{4} \\ 0 \text{ for } \frac{3\pi}{4} < |\omega| \le \pi \text{ and } |\omega| < \frac{\pi}{4} \end{cases}$$

Find the values of filter coefficients $h(n)$ using a rectangular window with $N = 11$ and find $|H(\omega)|$. 7

CSVTUonline.com

(*c*) The desired response of a low-pass filter is

$$H_d(e^{j\omega}) = \begin{cases} e^{-j3\omega} \text{ for } |\omega| \le \frac{3\pi}{4} \\ 0 \text{ for } \frac{3\pi}{4} < |\omega| \le \pi \end{cases}$$

Determine $|H(\omega)|$ for $N = 7$ using Hamming Window. 7

(*d*) A low pass filter has the desired frequency response as

$$H_d(e^{j\omega}) = \begin{cases} e^{-j3\omega} \, for \, |\omega| \le \frac{\pi}{2} \\ 0 \text{ for } \frac{\pi}{2} < |\omega| \le \pi \end{cases}$$

CSVTUonline.com

Determine the filter coefficients $h(n)$ for $N = 7$ using type-I frequency sampling method. 7

4. (*a*) Explain the warping effect in bilinear transformation conversion technique. 2

(*b*) Convert the analog filter into a digital IIR filter with system function

$$H(s) = \frac{(s+0.1)}{((s+0.1)^2+9)}$$

CSVTUonline.com

Use the bilinear transformation technique. The digital filter should have a resonant frequency of $\omega_r = \frac{\pi}{4}$. 7

(*c*) Design a third order normalized Butterworth digital filter using impulse invariant technique. Assume sampling period T=1 sec. 7

(*d*) Design a digital Chebyshev filter to meet the constraints

CSVTUonline.com

$$0.707 \le H(e^{j\omega}) \le 1 \quad \text{for } 0 \le \omega \le 0.2\pi$$

$$|H(e^{j\omega})| \le 0.1 \quad \text{for } 0.5\pi \le \omega \le \pi$$

Use bilinear transformation technique and assume sampling period $T = 1$ sec. 7

5. (*a*) Explain the polyphase decomposition process. 2

(*b*) Explain the decimation process. Give an example of the decimation process. 7

(*c*) Consider the multirate system shown in the figure, find $y(n)$ as a function of $x(n)$. 7

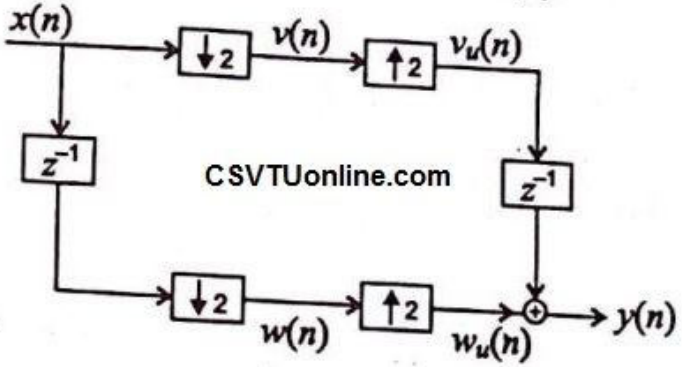

CSVTUonline.com

(*d*) Develop a 2-band decomposition for the transfer function

$$H(z) = \frac{(1+z^{-1}+2z^{-2})}{(1+0.8z^{-1}+0.6z^{-2})}$$

7

CSVTUonline.com