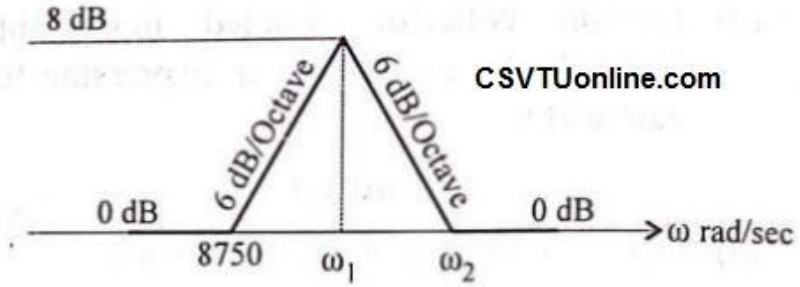

CSVTUonline.com

(*d*) Design a lattice circuit of passive all pass filter and find out its transfer function with magnitude response. 7

Unit-V

5. (*a*) Explain RC-CR Transformation. 2

(*b*) Draw the Sallen and Key circuit and its transfer function. Also explain its design case 2. 7

CSVTUonline.com

(*c*) It is required to design an LPF, only one op-amp is available and 0.1 μF capacitors are available. Design a filter to meet following specifications : 7

(*i*) The response is to be Butterworth

(*ii*) Find maximum value of order

(*iii*) The half power frequency is to be 2000 rad/sec

(*iv*) In addition to filtering action, we wish a low frequency gain of 14 dB.

(*d*) Define Bode sensitivity. Find the sensitivity of Sallen and Key circuit. 7

.....

Roll No. .....

328652(28)

BE (6th Semester)

Examination, April - May, 2016

(New Scheme)

Electronic Circuit Design

Time Allowed : 3 hours *Maximum Marks :* 80

CSVTUonline.com

Minimum Pass Marks : 28

Note : (*i*) Part (*a*) of each unit is compulsory and attempt any two from parts (*b*), (*c*) and (*d*).

(*ii*) The figures in the right-hand margin indicate marks.

Unit-I

1. (*a*) State clamping circuit theorem. 2

(*b*) Draw the circuit diagram of a simple current sweep generator using transistor. Describe its operation with necessary waveform. Also derive an expression for slope error. 7

(*c*) Draw the output waveform for given circuit. Assume ideal diode. Input is 10 V sinusoidal signal. 7

CSVTUonline.com

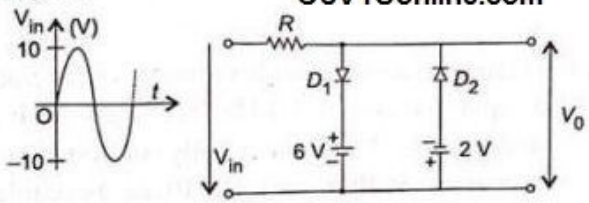

CSVTUonline.com

(*d*) Name the circuit and draw the output waveform for ideal diode circuit. Consider V_{in} be the maximum peak of input applied square wave 7

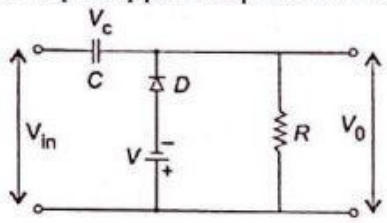

Unit-II

2. (*a*) Explain use of commutating capacitors. 2

(*b*) For the fixed bias binary shown, $h_{FE\,(min)} = 40$, $V_{CC} = 18$ V, $V_{BB} = 6$ V, $V = 6$ V, $R_C = 1.5$ kΩ, $R_1 = 5$ kΩ $R_2 = 2$ kΩ.
Neglect the drop across the forward biased junctions. Verify that one transistor is in cut off and the other is in saturation. Also calculate stable state voltages and currents. 7

CSVTUonline.com

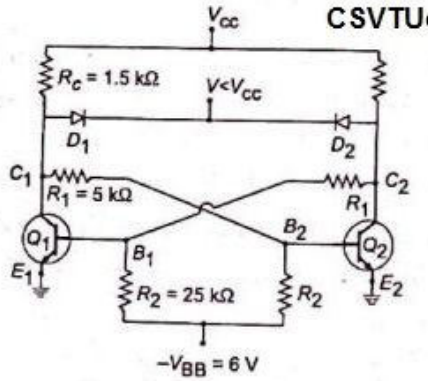

(*c*) Design an astable multivibrator to generate a square wave of 1 kHz frequency with a duty cycle of 25% and only silicon n-p-n transistors with $h_{FE\,(min)} = 40$ are available. 7

(*d*) Explain collector coupled monostable multivibrator and derive an expression for gate width. 7

CSVTUonline.com

Unit-III

3. (*a*) Define stable and quasi-stable state. 2

(*b*) Draw the circuit diagram of an astable multivibrator to generate the output signal with frequency of 1 kHz and the duty cycle of 75%. Assume $C = 0.01$ μF. 7

(*c*) Draw the internal block diagram of 555 timer in monostable mode and explain its operation with proper waveform. 7

(*d*) Explain FSK generator as an application of 555 times in astable mode. 7

Unit-IV

CSVTUonline.com

4. (*a*) Explain tunning algorithm. 2

(*b*) Draw the circuit diagram of Biquad circuit and derive the expression for frequency response. Also specify the transfer function for LPF and BPF. 7

(*c*) The asymptotic Bode plot for desired magnitude response is given below, find the filter circuit, give the schematic and element values. Scale so that the element values all in practical range. 7