328655(28)

B. E. (Sixth Semester) Examination, Nov.-Dec. 2019

(New Scheme)

(ET & T Engg. Branch)

INFORMATION THEORY & CODING

Time Allowed : Three hours

Maximum Marks : 80

Minimum Pass Marks : 28

Note : *Attempt all questions. Part (a) of each question is compulsory and carries 2 marks. Attempt any* ***two*** *parts from b, c and d of each question and carries 7 marks.*

Unit-I

1. (a) Define Entropy? A source transmits two independent message with probabilites of P and

Scanned by CamScanner

(1 – P) respectively. Prove that the entropy is maximum when both the messages are equally likely.

(b) Determine the Lempet-Ziv code for the following bit stream :

11101001100010110100

Recover the original sequence from the encoded stream

(c) Define mutual information and prove that following :

(i) $I(x; y) = I(y; x)$

(ii) $I(x; y) = H(x) - H(x/y)$

(iii) $I(x; y) = H(y) = H(y/x)$

(d)

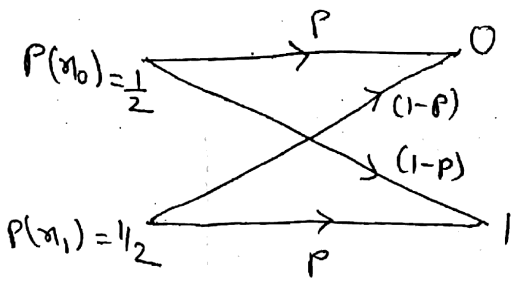

In the given figure of binary symmetric channel, find the rate of information transmission across this channel for P = 0.8. The symbols are generated at the rate of 1000 per second $P(x_0) = P(x_1) = \frac{1}{2}$,

Also determine channel i/p information rate?

Unit-II

2. (a) Define Linear Codes? What are the different properties of linear codes?

(b) An analog signal having 4 kHz Bandwidth is sampled at 1.25 times the Nyquist rate and each sample is quantized into one of 256 equally levels. Assuming the sample to be satistically independent:

(i) What is information rate of this source

(ii) Can the o/p of this source transmitted without error over an AWhN channel with a Bandwidth of 10 kHz and S/N ratio of 20 db.

(iii) Find S/N ratio required for error free transmission of part (ii).

(iv) Find the Bandwidth required for an AWhN

Scanned by CamScanner

channel for an error free transmission of o/p at this source if (S/N) is 20 db.

(c) Construct the extension field of hF (16) and hf (8) by using the base field hf(2).

(d) Design the encoder for (7, 3) cyclic code generated by h (P) = $P^3 + P + 1$ and verify its operation for any message vector.

Unit-III

3. (a) What is primitive element. Explain it by using any example.

(b) Find the generator polynomial at a tripple error correcting BCH codes with block length n = 15 over hf (2^4).

(c) Construct the table for elements of hf (16) using basefield GF(2) using the primitive polynomial $x^4 + x + 1$.

(d) Explain the significance of Reed-Saleman code. Also explain how it can be used for information technology?

Unit-IV

4. (a) Define Hamming Distance?

(b) Discuss trellis code with example.

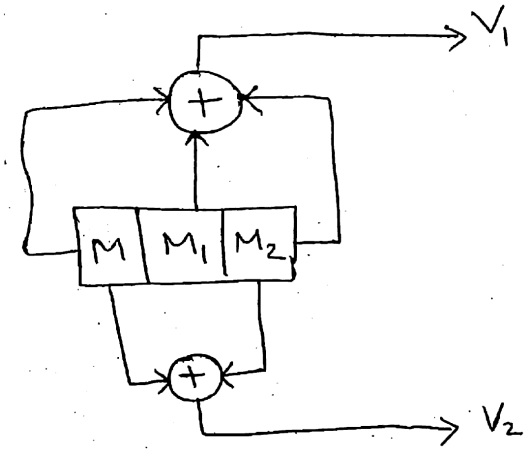

Obtain the convolution code for the bit sequence 11011011 by constructing code tree?

(c) Using the Trellis diagram decode the bit stream 11010100.

(d) The figure below depict a rate (1/2) and constraint length N = 2 convolutional code encoder. Sketch

Scanned by CamScanner

the code tree for the same

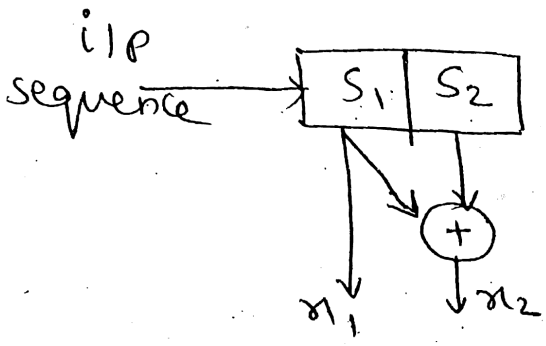

Unit-V

5. (a) Define tree Euclidean distance of the TCM scheme?

(b) Explain in details of Ungerbaeck's TCM. Design Rules, also explain TCM decoder.

(c) Consider the TCM encoder shown in figure :

(i) Draw the state diagram for this encoder.

(ii) Draw the Trellis diagram for this encoder.

(iii) Encode the bit stream 10111000

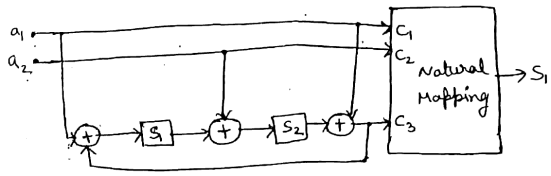

(d) Explain TCM design rule?

Scanned by CamScanner