www.csvtuonline.com

Printed Pages – 7

328812 (28)

BE (8th Semester)

Examination, Nov.-Dec., 2013

Branch : ET & T

VLSI DESIGN

Time Allowed : Three Hours

Maximum Marks : 80

Minimum Pass Marks : 28

Note : (a) Part a and b of each question is compulsory.

(b) Attempt any one part from c and d.

Q. 1. (a) Which type of binary file is used to program the FPGA ? 2

www.csvtuonline.com

(b) Draw and explain the design abstraction for VLSI Design. 4

(c) Assume that a gate array contains the type of logic cell depicted in the figure. The inputs in_1, ... in_7 can be connected to either 1 or 0 or to any logic signal. Show how the logic cell can be used to realize the function $f = X_1X_2 + X_3$. 10

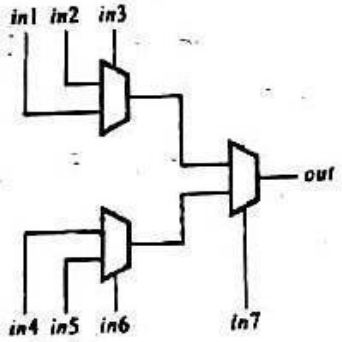

www.csvtuonline.com

www.csvtuonline.com

(d) Draw and explain the block diagram of CPLD ? How the output is termed as registered output ? 10

Q. 2. (a) In CMOS stick diagram which line separates n-type and p-type transistor. 2

(b) Draw and explain the contacts rule for CMOS. 4

(c) Draw the stick diagram for CMOS 2 input NAND gate. 10

www.csvtuonline.com

www.csvtuonline.com

www.csvtuonline.com

(d) Calculate the ON resistance of a circuit shown from VDD to GND if n-channel sheet resistance $R_{sn} = 10^4\Omega$ per square and p-channel sheet resistance $R_{sp} = 2.5 \times 10^4\Omega$ per square. 10

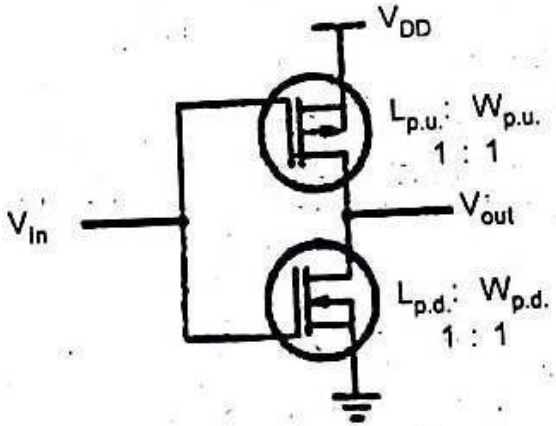

Q. 3. (a) What is meant by ratioed logic ?

www.csvtuonline.com

www.csvtuonline.com

www.csvtuonline.com

(b) Draw the stick diagram for 4 input CMOS data selector. 4

(c) Draw the stick diagram of D Flip-Flop. 10

(d) Construct a stick diagram for 1-T RAM cell. 10

Q. 4. (a) Write the acronym for VHDL ? 2

(b) Write a VHDL code to design a 16 : 1 MUX using 4 : 1 MUX only 4

(c) Design ALU (74381) using VHDL 10

www.csvtuonline.com

www.csvtuonline.com

www.csvtuonline.com

(d) Write a VHDL code which counts the number of persons entering inside the hall and displays the count on the 7 segment display unit. 10

Q. 5. (a) What do you mean by BIST ? 2

(b) A given FSM has an input, w, and an output, z. During four consecutive clock pulses of four values of the signal is applied. Derive a state table for the FSM that produces Z = 1 when it detects that either the sequence

www.csvtuonline.com

www.csvtuonline.com

www.csvtuonline.com

w = 0010 or w = 1110 has been applied, otherwise, z = 0. After the fourth clock pulse, the machine has to be again in the reset state, ready for the next sequence. 4

(c) Design a 3 bit Johnson counter in VHDL using moore FSM. 10

(d) Write a test bench for HALF ADDER. 10

www.csvtuonline.com

www.csvtuonline.com