Printed Pages – 5 Roll No. .....

CSVTUonline.com

333454(22)

B. E. (Fourth Semester) Examination, Nov.-Dec. 2015

(New Scheme)

(IT Engineering)

ANALOG ELECTRONICS CIRCUITS

Time Allowed : Three hours

CSVTUonline.com

Maximum Marks : 80

Minimum Pass Marks : 28

Note : *Attempt all questions. Part (a) from each question is compulsory. Attempt any two parts from part (b), (c) and (d) of each question.*

Unit-I

1. (a) What are the advantages of Darlington pair circuit? 2

CSVTUonline.com

(b) Draw low frequency equivalent circuit of common emitter (CE) transistor and derive expression for current gain (A_i), input impedance (R_i), voltage gain (A_v) and output resistance (R_0). 7

(c) For the amplifier shown in figure below calculate R_0,

CSVTUonline.com

R_i, A_V, A_{VS} and $A_I' = -\frac{I_2}{I_1}$. The transistor parameters are given as : 7

$h_{ie} = 1{\cdot}1$ K, $h_{re} = 2{\cdot}5 \times 10^{-4}$, $h_{fe} = 50$, $h_{oe} = 24\,\mu A/V$

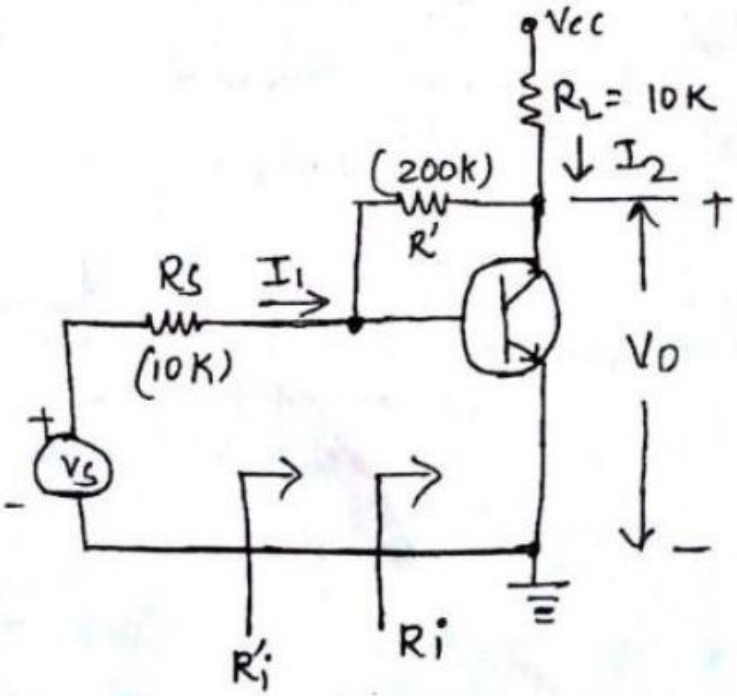

CSVTUonline.com

CSVTUonline.com

(d) Draw and derive the expression of an emitter follower. List its three most important characteristics. 7

Unit-II

2. (a) Draw the Hybrid-π model at low frequencies. 2

(b) Derive the expression for the CE short-circuit current gain A_i as a function of frequency. 7

(c) The following low frequency parameters are known for a given transistor at $I_C = 10$ mA, $V_{CE} = 10$ V, and at room temperature.

$h_{ie} = 500\ \Omega$, $h_{oe} = 4 \times 10^{-5}$ A/V

$h_{fe} = 100$, $h_{re} = 10^{-4}$

CSVTUonline.com

At the same operating point, $f_T = 50$ MHz and $C_{ob} = 3$ pf. Compute the various of all the hybrid-π parameters. 7

(d) Derive the expression for all the resistive components in the hybrid-π model. 7

Unit-III

3. (a) What is Noise? Mention any three types of noise associated with semiconductor devices. 2

(b) Compare direct coupling, RC coupling and transformer coupling. 7

CSVTUonline.com

(c) Justify with derivation "the bandwidth of cascaded amplifier is always less than that of the bandwidth of single stage amplifier. 7

(d) Explain different types of distortion exist in amplifier. 7

Unit-IV

4. (a) Draw equivalent circuit for a voltage amplifier. 2

(b) Draw a feedback amplifier in block diagram form. Identify each block and state its function. 7

(c) State and verify whether the input resistance R_{if} and output resistance R_{of} increased or decreased for voltage series feedback amplifier. 7

CSVTUonline.com

(d) Calculate G_M, β, D, G_{Mf}, A_{Vf}, R_{if}, R_{of} and R'_{of} for the amplifier of below figure. Assume : $h_{ie} = 1{\cdot}1$ K, $h_{fe} = 50$, $h_{re} = h_{oe} = 0$. 7

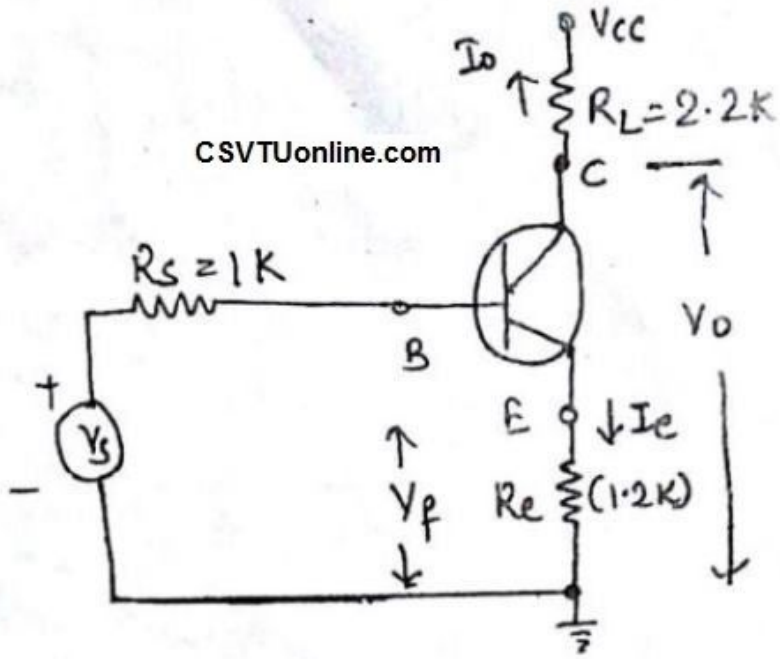

CSVTUonline.com

Unit-V

5. (a) Give one advantage and one disadvantage of positive feedback with its application. 2

(b) Explain Barkhausen criterion with all three conditions of oscillation. 7

CSVTUonline.com

(c) Explain function of crystal oscillator. 7

(d) Derive amplitude, stability and frequency stability equation for *RC*-phase shift oscillator. 7

CSVTUonline.com