www.csvtuonline.com

Roll No. .....

337352(37)

B. E. (Third Semester)
EXAMINATION, April-May, 2015
(New Scheme)
(Branch : Mech.)
MACHINE DRAWING

Time : Four Hours] [*Maximum Marks : 80*

[*Minimum Pass Marks : 28*

Note : (i) Part (a) of each question is compulsory.
(ii) Attempt the questions as per the choice.
(iii) Assume suitable data if required.
(iv) Choose suitable scales.
(v) Attempt questions of 16 marks in question nos. 1, 2 and 3 and 32 marks in question No. 4.

1. (a) Why is knurling provided ? 2

(b) Draw the conventional representation of : 7

(i) Straight knurling
(ii) Disc spring
(iii) Spiral spring
(iv) Splined shaft

www.csvtuonline.com

www.csvtuonline.com

www.csvtuonline.com

(c) Draw the representation of the following geometrical and dimensional tolerances : 7

(i) Parallelism
(ii) Perpendicularity
(iii) Angularity
(iv) Concentricity and co-axiality

(d) What is meant by the direction of lay ? How is it shown on drawing ? Sketch the symbols related to the direction of lay. 7

2. (a) What is meant by "Offset" ? 2

(b) The isometric view is shown in the Fig. 1. Draw the sectional view from the front, the view from the above and the view from the right. Use first angle projection. 14

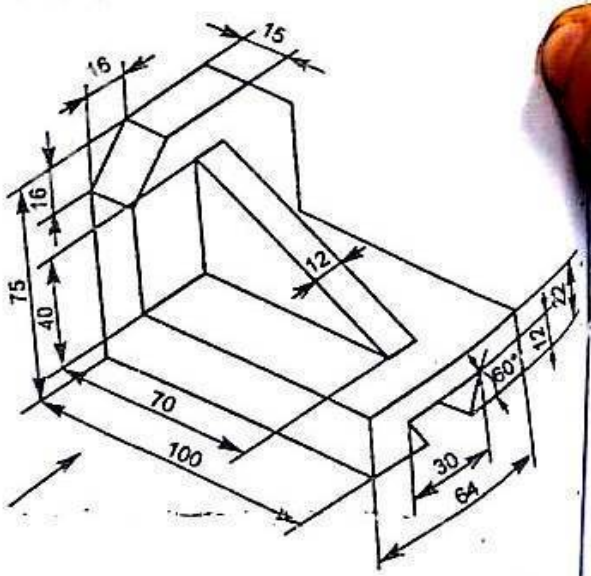

Fig. 1

www.csvtuonline.com

www.csvtuonline.com

Or

(c) The isometric view of the [illegible] shown in Fig. 2. Draw the sectional view from the front, the view from the above and the view from the right. Use first angle projection. 14

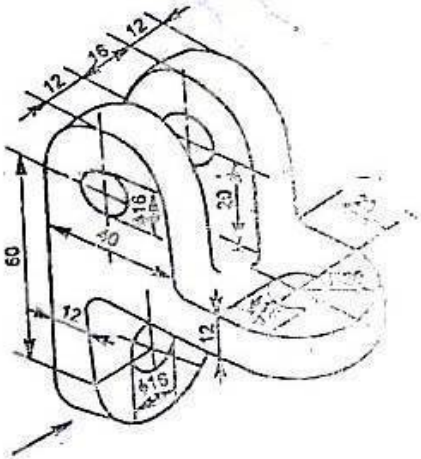

Fig. 2

3. (a) Mention the types of rivetted joints. 2

(b) Sketch neatly, a sectional front view and top view of a single-riveted butt joint for two 10 mm thick plates, using two-straps. Show all dimensions on your sketch. 7

(c) Draw three views of a square-headed bolt 20 mm diameter, 120 mm long and the length of the threaded part of the bolt is 40 mm. 7

(d) Sketch any *two* types of structural riveted joints, indicating proper dimensions. 7

www.csvtuonline.com

www.csvtuonline.com

www.csvtuonline.com

4. (a) Mention the application of knuckle joint. 2

(b) Assemble together the parts of Plummer block (fig. 3) and draw its sectional front view, top view and side view. 30

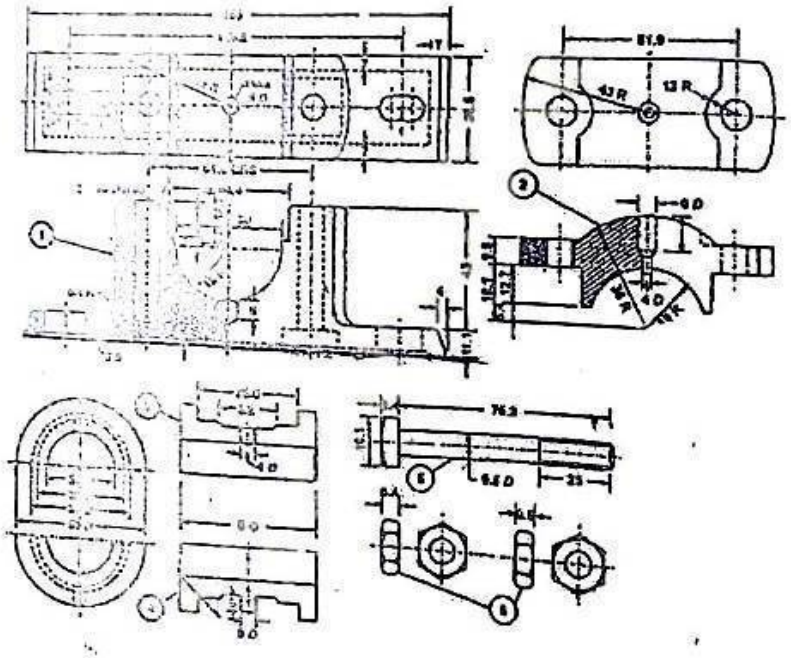

S. No.	Part Name	Material	No. off
1.	Body	C. I.	1
2.	Cap	C. I.	1
3.	Upper brass	G. M.	1
4.	Lower brass	G. M.	1
5.	SO HO bolt	M. S.	2
6.	Nut and locknut	M. S.	2 each

Fig. 3

www.csvtuonline.com

www.csvtuonline.com

Or

Details of a 'Blow-off' cock is given in Fig. 4. Draw the following assembled views in first angle projection method : 30

(i) Front view Right half in section

(ii) Top view

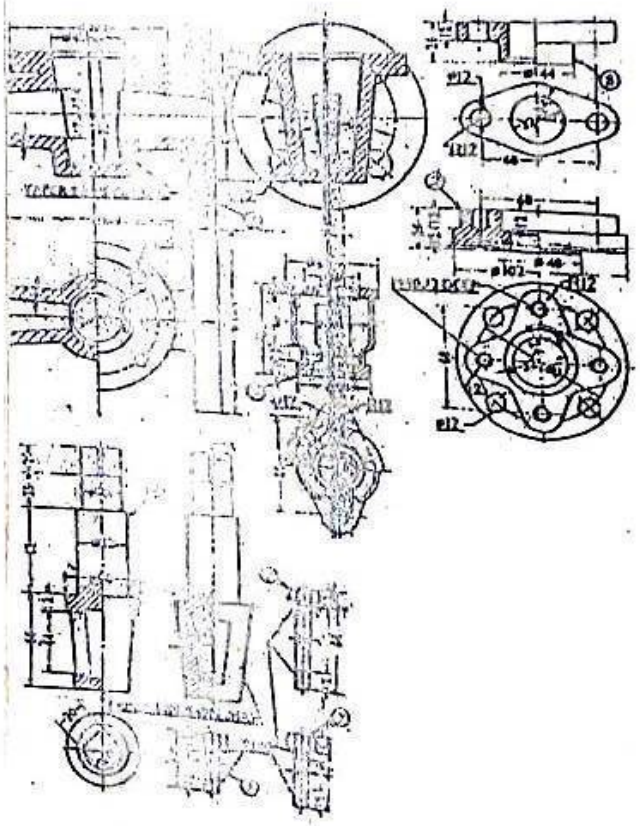

Blow Off Cock Details

Fig. 4

1920

www.csvtuonline.com

www.csvtuonline.com