csvtuonline.com

337414(37)

B. E. (Fourth Semester) Examination, April-May, 2009

(Mechanical Engg. Branch)

KINEMATICS of MACHINES

Time Allowed : Three hours

Maximum Marks : 80

Minimum Pass Marks : 28

Note *: All questions are compulsory.*
Internal choice are given with in the questions.

1. (a) Define Kinematic Chain. 2

(b) Explain four bar chain and its inversions. 4

(c) Figure shows a mechanism in which OA = 300 mm. AB = 600 mm, AC = 1200 mm and BD = 1200 mm. OD is horizontal for the given configuration. If OA

csvtuonline.com

rotates at 200 rpm in the clockwise direction, find

(i) the linear velocities of C & D, and

(ii) the angular velocities of links AC & BD. 10

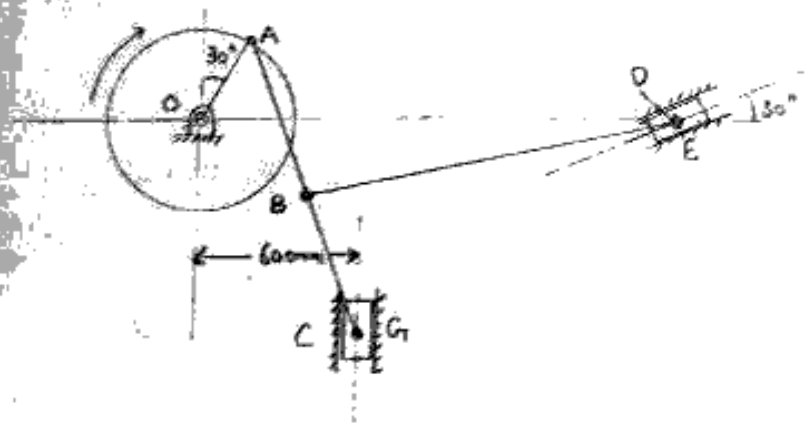

Fig.-1

Or

In the figure, the angular velocity of the crank OA is 600 rpm. Determine the linear velocity of the slider D and angular velocity of the link BD, when the crank is inclined at an angle of 75° to the vertical. The dimensions of various links are : OA = 28 mm; AB = 44 mm; BC = 49 mm; and BD = 46 mm. The centre distance between the centres of rotation O and C is 65 mm. The path of travel of the slider is 11 mm below the fixed point C. The slider moves along a horizontal path and OC is vertical. 10

csvtuonline.com

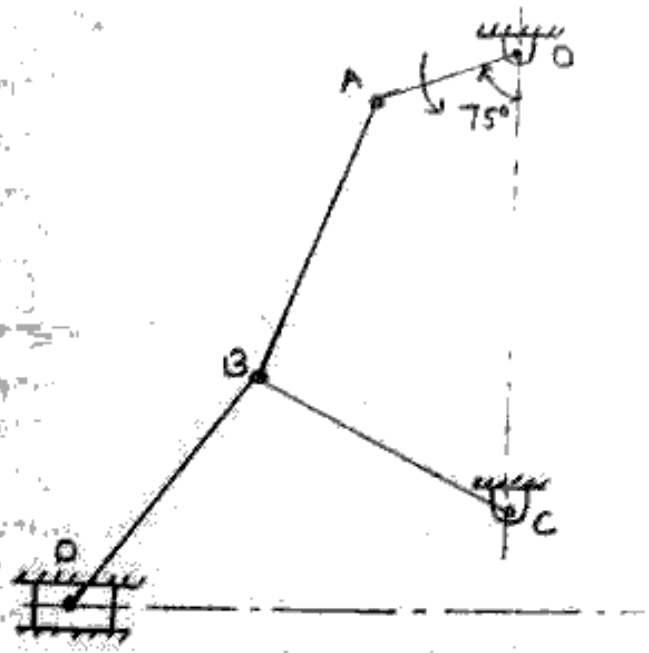

Fig.-2

2. (a) Define Pantograph. 2

(b) In the mechanism as shown in fig., the crank rotates at 20 rpm anticlockwise and gives motion to sliding blocks B and D. The dimensions of the various links are OA = 300 mm; AB = 1200 mm; BC = 450 mm and CD = 450 mm.

For the given configuration, determine :

(i) velocities of sliding at B and D.

(ii) angular velocity of CD.

(iii) linear acceleration of D, and

(iv) angular acceleration of CD 14

csvtuonline.com

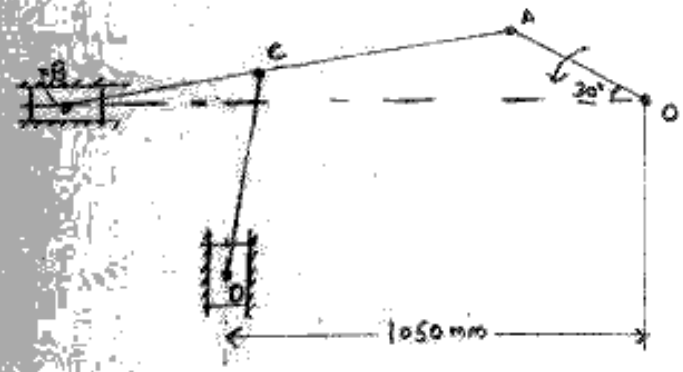

Fig.-3

Or

The driving crank AB of the quick return mechanism, as shown in fig. revolves at a uniform speed of 200 rpm. Find the velocity and acceleration of the toolbox R, in the position shown, when the crank makes an angle of 60° with the vertical line of centres PA. What is the acceleration of sliding of the block at B along the slotted lever PQ. 14

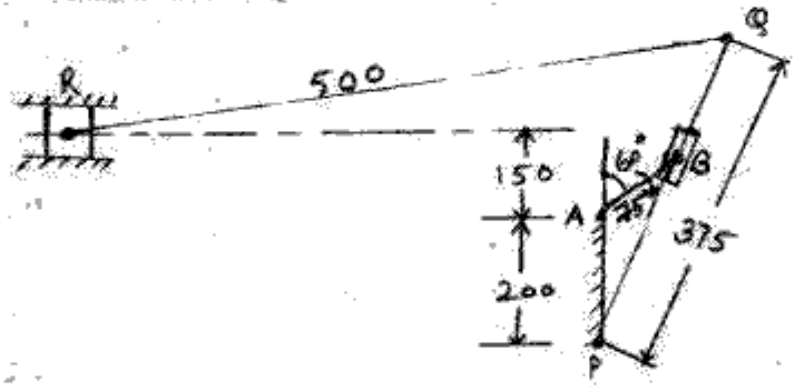

All dimensions in mm

Fig.-4

csvtuonline.com

3. (a) Define Pitch Curve. 2

(b) Discuss the displacement, velocity and acceleration diagrams when the follower moves with uniform acceleration and retardation. Draw neat sketches of each separately. 14

Or

A tangent cam with a base circle diametre of 50 mm operates a roller follower 20 mm in diametre. The line of stroke of roller follower passes through the axis of the cam. The angle between the tangential faces of the cam is 60°, speed of the cam shaft 200 rpm and the life of the follower 15 mm. Calculate :

(i) the main dimensions of the cam.

(ii) the acceleration of the follower at

(x) the beginning of lift

(y) where the roller touches the nose (just)

(y) the apex of the circular nose 14

4. (a) What is angle of obliquity? 2

(b) Discuss the various types of geartrains. 4

(c) Two gear wheels mesh externally and are to give a velocity ratio 3 to 1. The teeth are of involute form; module = 6 mm, addendum = one module pressure angle = 20°. The pinion rotates at 90 rpm.

Determine : 1. The number of teeth on the pinion to avoid interference on it and the corresponding number

csvtuonline.com

of teeth on the wheel, 2. The length of path and arc of contact, 3. The number of pairs of teeth in contact, and 4. The maximum velocity of sliding. 10

Or

In an epicyclic gear train, the internal wheels A and B compound wheels C & D rotate independently about axis O. The wheels E & F rotate on pins fixed to the arm G. E gears with A and C and F gears with B and D. All the wheels have the same module and the number of teeth are ; $T_C = 28$; $T_D = 26$; $T_E = T_F = 18$.

(i) sketch the arrangement

(ii) find the number of teeth on A & B

(iii) If the arm G makes 100 rpm clockwise and A is fixed; find the speed of B. 10

5. (a) What is absorption dynamometer? 2

(b) Determine the power lost in overcoming the friction in a thrust bearing, the external and internal diametres of contacting surfaces are 320 mm and 200 mm respectively. The total axial load is 80 kN and intensity of pressure is 350 kN/m². The shaft rotates at 400 rpm. Taking co-efficient of friction as 0·06. 4

(c) The simple band brake as shown in fig. is applied to a shaft carrying a flywheel of mass 400 kg. The radius of gyration of the flywheel is 450 mm and runs at 300 rpm. If the co-efficient of friction is 0·2 and brake drum diameter is 240 mm, find :

csvtuonline.com

(i) the torque applied due to hand load of 100 N.

(ii) the number of turns of the wheel before it is brought to rest and

(iii) the time required to bring it to rest, from the moment of the application of the brake. 10

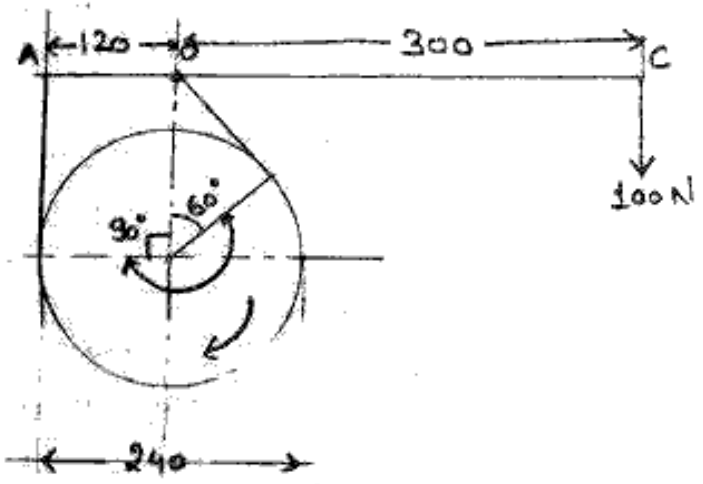

All dimensions in mm

Fig.-5

Or

A band and block brake, having 14 blocks each of which substends an angle of 15° at the centre, is applied to a drum of 1 mt effective diametre. The drum and flywheel mounted on the same shaft has a mass of 2,000 kg and a combined radius of gyration of 500 mm. The two ends of the band are attached to pins on opposite sides of the brake lever at distances of 30 mm

csvtuonline.com

and 120 mm from the fulcrum. If a force of 200 N is applied at a distance of 750 mm from the fulcrum, find :

(i) maximum braking torque

(ii) angular retardation of drum

(iii) time taken by the system to come to rest from the rated speed of 360 rpm. The coefficient of friction between blocks and drum may be taken as 0·25. 10

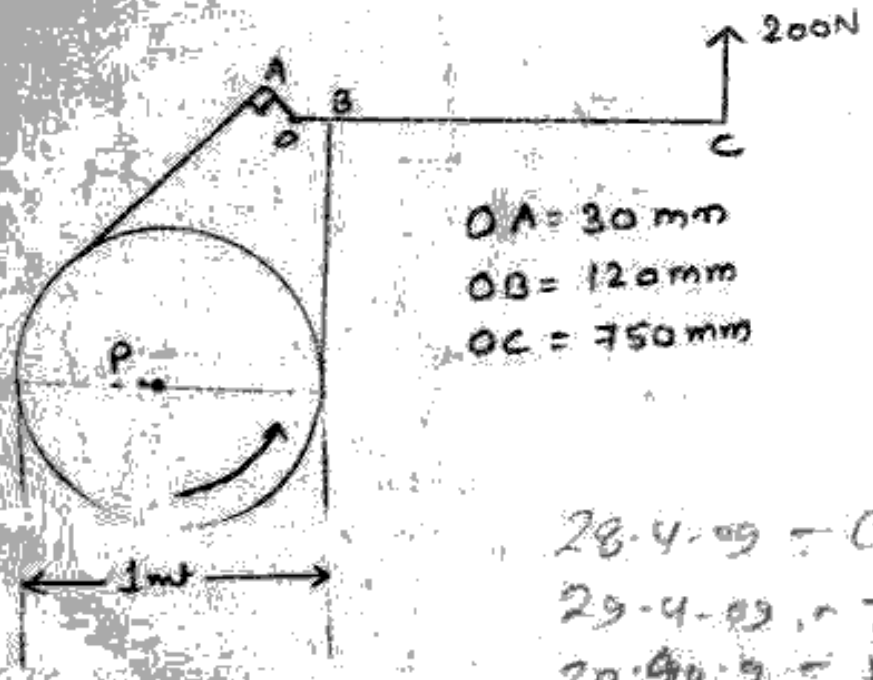

Fig.-6

28.4.09 - CG
29.4.09 - AT
30.4.09 - KD
1.5.09 - MM