Printed Pages – 6 Roll No. : .....

337414(37)

B. E. (Fourth Semester) Examination, 2020

(Old Scheme)

(Mechanical, Mechatronics Engg. Branch)

KINEMATICS of MACHINES

Time Allowed : Three hours

Maximum Marks : 80

Minimum Pass Marks : 28

Note : *Parts (a) of each question is compulsory. Attempt total of 16 marks from each question. Assume data if missing.*

1. (a) Differentiate lower pair and higher pair. 2

(b) With diagram explain the working of two different types of quick return mechanism. 7

(c) In a four link mechanisms the dimensions of the links is, $AB = 50$ mm, $BC = 66$ mm, $CD = 56$ mm, $AD = 100$ mm. At the instant when angle $DAB = 60°$. The link has an angular velocity of 10, 5 rad/s in counter clockwise direction.

Determine :

(i) Velocity at C

(ii) Velocity at E on link BC, $BE = 40$ mm

(iii) Angular velocity of link BC & CD 7

(d) The slider crank mechanism the crank is 480 mm long and rotates at 20 rod/s in CCW direction. The length of the connecting rod is 1600 mm. When the crank turms 60° from the inner dead centre.

Determine :

(i) Velocity of slider

(ii) The velocity of a pt E located at a distance of 450 mm on the connecting rod extended

(iii) The angular vel. of connecting rod

(iv) The position and vel. of a pt F on the connecting rod having the least absolute vel. 7

2. (a) What are centripetal and tangential components of acceleration? 2

(b) Explain the procedure to connect Klein's construction to determine the velocity and acceleration of a slider crank mechanism. 7

(c) In the mechanism shown in fig. the crank OA rotates at 60 rpm.

Determine :

(i) Linear acceleration of the slider at B

(ii) Angular acceleration of the links AC, COD and BD. 7

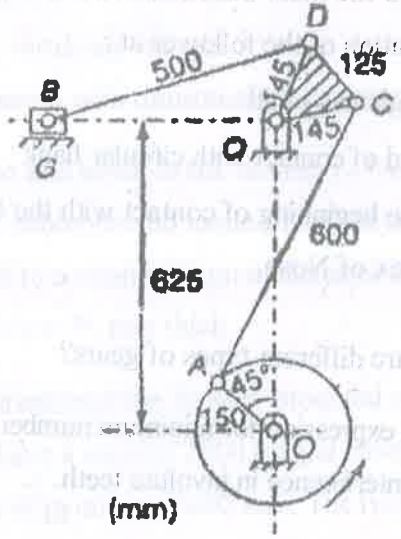

(d) Device coriolis component of acceleration. 7

3. (a) What are different types of cam? 2

(b) Draw displacement, velocity and acceleration diagrams. When the follower moves with SHM. Also derive condition for maximum acceleration. 14

Or

A symmetrical circular cam operates a flat faced follower with a lift of 30 mm. The minimum radius of the cam is 50 mm and the nose radius is 12 mm. The angle of left 80°. If the speed of the cam is 210 rpm find the main dimensions of the cam and the acceleration of the follower at :

(i) . Beginning of lift

(ii) End of contact with circular flank

(iii) The beginning of contact with the Nose and apex of Nose. 14

4. (a) What are different types of gears? 2

(b) Derive expression for minimum number of teeth to avoid interference in involute teeth. 7

(c) A rack is driven by a pinion having 24 involute tooth and a 140 mm pitch circle diameter addendum both pinion and rack is 6 mm. Determine the least pressure angle which can be used to avoid interference. Find min number of teeth to avoid inference. 7

(d) A pinion having 30 teeth drives a gear having 80 teeth. The profile of the gear is involute with 20° pressure angle, 12 mm module and 10 mm addendum. Find the length of path of contact, arc of contact and contact ratio. 7

5. (a) Define friction circle. 2

(b) State working of absorption dynamometers. Compare it with transmission dynamometers. 7

(c) A band and block brack having 12 blocks each of which subtends and angle of 16° at the centre, is applied to a rotating drum of diameter 600 mm. The blocks are 75 mm thick. 7

(d) The drum and the flyweel mounted on the same shaft have a mass of 1800 kg and have a combined radius of gyration of 600 mm. The two ends of the

band are attached to pins on the opposite. Sides of the brack fulcrum at distance of 40 mm and 150 mm from the fulcrum. If a force of 250 N is applied at a distance of 900 mm from the fulcrum.

Find :

(i) The max. braking torque

(ii) The angular retardation of the drum

(iii) The time taken by the system to be stationary from the rated speed of 300 rpm.

Take $\mu = 0 \cdot 3$. 7