www.csvtuonline.com

337513 (37)

BE (5th Semester)

Examination, Nov.-Dec., 2014

Branch : Mechanical, Mechatronics

DYNAMICS OF MACHINES

Time Allowed : Three Hours

Maximum Marks : 80

Minimum Pass Marks : 28

Note : (i) Assume data, if missing.

(ii) Internal choice is given.

Q. 1. (a) Define the following terms : 2

(i) Stability

(ii) Isochronism

www.csvtuonline.com

www.csvtuonline.com

www.csvtuonline.com

(b) Describe the functions of a simple watt governor ? 4

(c) A Proell governor has all four arms of length 250 mm. The upper arms are pivoted on the axis of rotation and the lower arms are attached to a sleeve at a distance of 30 mm from the axis of rotation. The mass of each ball is 4 kg and the mass of the sleeve is 40 kg. The extension of the lower arm to which the balls are attached is 100 mm long and are parallel to the axis at the minimum radius. The minimum and maximum radii of governor are 160 mm and 220 mm. Determine the speeds corresponding to minimum and maximum radii 10

www.csvtuonline.com

www.csvtuonline.com

OR

In a spring loaded governor of the Hartnell type, the mass of each ball is 4 kg, length of vertical arm of the bell crank lever is 100 mm and that of the horizontal arm is 50 mm. The distance of fulcrum of each bell crank lever is 80 mm from the axis of rotation of the governor. The extreme radii of rotation of the balls are 75 mm and 112.5 mm. The maximum equilibrium speed is 5 percent greater than the minimum equilibrium speed which is 360 rpm. Find, neglecting obiquity of arms, initial compression of the spring and equilibrium speed corresponding to the radius of rotation of 100 mm. 10

www.csvtuonline.com

www.csvtuonline.com

www.csvtuonline.com

Q. 2. (a) Define static and dynamic balancing.

(b) The following data refer to a four coup wheel locomotive with two inside cylinde

Pitch of cylinders : 600 mm

Reciprocating mass/cylinder : 315 kg

Revolving mass/cylinder : 260 kg

Distance between driving wheels : 1.6 m

Distance between coupling rods : 2 m

Diameter of driving wheels : 1.9 m

Revolving parts for each

Coupling rod crank : 130 kg

Engine crank radius : 300 mm

www.csvtuonline.com

www.csvtuonline.com

Coupling rod crank radius : 240 mm

Distance of centre of balance mass in planes of driving wheels from axle centre = 750 mm

Angle between engine cranks = 90°

Angle between coupling rod crank with adjacent engine crank = 180°

The balance mass required for the reciprocating parts is equally divided between each pair of coupled wheel.

Determine the :

ACC No.

www.csvtuonline.com

www.csvtuonline.com

www.csvtuonline.com

(i) magnitude and position of the balance mass required to balance two-third of reciprocating and whole of the revolving parts.

(ii) hammer-blow and the maximum variation of tractive force when the locomotive speed is 80 km/hr. 14

OR

(b) A 4 cylinder engine in arranged as shown in Fig. 1. The reciprocating masses in planes 1 and 4 are each 100 kg and in planes 2 and

www.csvtuonline.com

www.csvtuonline.com

www.csvtuonline.com

3 are 173 kg. If the crank radius is 0.3 m, the length of connecting rod 1.2 m and the speed 120 rpm, determine the magnitude of primary and secondary forces and couples. Solve the problem graphically as well analytically and compare the results. 14

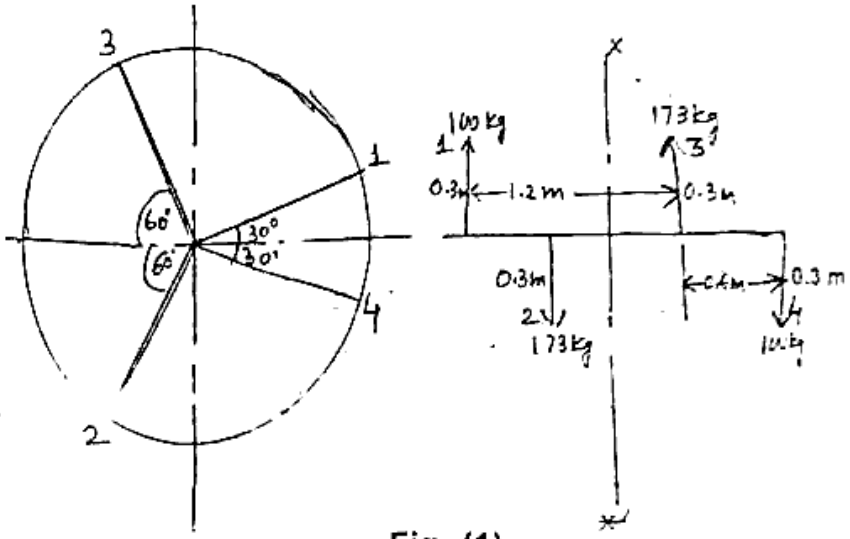

Fig. (1)

P.T.O.

www.csvtuonline.com

www.csvtuonline.com

www.csvtuonline.com

Q. 3. (a) What do you mean by spin, precession and gyroscopic planes ? 2

(b) Explain the gyroscopic effect on two-wheeled vehicle and derive a relation for the limiting speed of the vehicle when taking turn. 4

(c) A four wheeled trolley of total weight 20 kN running on rails of 1 m gauge rounds a curve of 30 m at 40 km/hr on a track of embankment slope of 10°. The wheels have external diameter of 60 cm and each pair of axle weighs 200 N and has a radius of gyration of 25 cm. The height of centre of

www.csvtuonline.com

www.csvtuonline.com

gravity of the car above the wheel base is 1 m. Determine, allowing for centrifugal force and gyroscopic couple acting, the pressure on each rail. 10

OR

(c) A ship propelled by a turbine rotor which has a mass of 5 tonnes and a speed of 2100 rpm. The rotor has a radius of gyration of 0.5 m and rotates in a clockwise direction when viewed from the stern. Find the gyroscopic effects in the following conditions :

www.csvtuonline.com

www.csvtuonline.com

www.csvtuonline.com

(1) The ship sails at a speed of 30 km/h and steers to the left in a curve having 60 m radius.

(2) The ship pitches 6 degree above and 6 degree below the horizontal position. The bow is descending with its maximum velocity. The motion due to pitching is simple harmonic and the periodic time is 20 sec.

Determine also the maximum angular acceleration during pitching. Explain how the direction of motion due to gyroscopic effect is determined in each case. 10

www.csvtuonline.com

www.csvtuonline.com

www.csvtuonline.com

Q. 4. (a) Show that the ratio of two successive amplitudes of oscillation is constant in a damped vibrating system ? 2

Attempt any **two** parts :

(b) A hollow shaft with external dia. 80 mm and internal dia. 40 mm is simply supported at two ends 1.6 m apart. Two wheels each of mass 60 kg are fixed to it at a distance of 0.4 m and 0.8 m from the left support. The modulus of elasticity of the shaft material is 2×10^6 bar, and density of material is 8000 kg/m^3. Determine the whirling speed of the shaft considering also the mass of the shaft. 7

www.csvtuonline.com

www.csvtuonline.com

www.csvtuonline.com

(c) A mass of 10 kg is suspended from one end of a helical spring, the other end being fixed. The stiffness of the spring is 10 N/mm. the viscous damping causes the amplitude to decrease to one-tenth of the initial value in four complete oscillations. If a periodic force of 150 cos 50t N is applied at the mass in the vertical direction, find the amplitude of the forced vibrations. What is its value of resonance ? 7

(d) The shaft shown in Fig. 2 carries two masses A and B. The mass at A is 400 kg and its radius of gyration is 67.5 cm

www.csvtuonline.com

www.csvtuonline.com

corresponding values of B are 600 kg and 82.5 cm. Shaft diameter between C and B is undecided. Assuming it to be 9 cm (a) Determine the frequency of torsional oscillations (b) Determine what it would be, if the node is to be in the plane CC' as shown, $C = 84 \times 10^4$ bar. 7

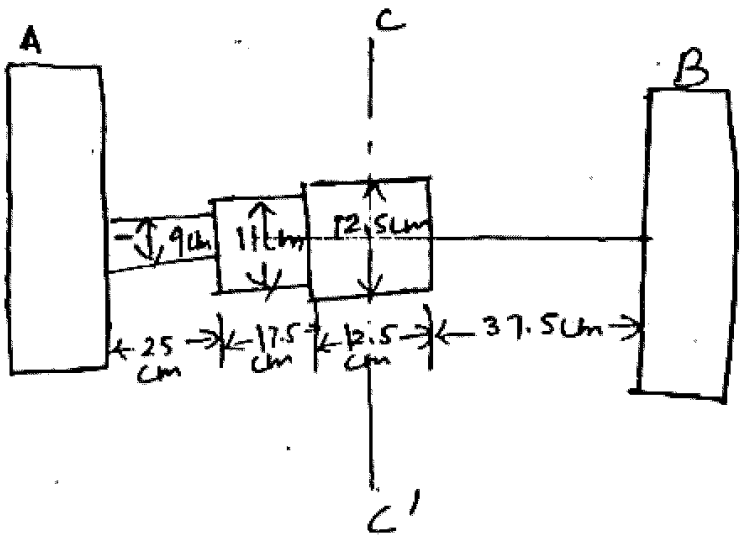

Fig. 2

www.csvtuonline.com

www.csvtuonline.com

Q. 5. (a) Define fluctuation of energy and fluctuation of speed as applied to flywheel ? 2

(b) What is the difference between piston effort, crank effort and crank pin effort. 4

(c) A 30 kW horizontal steam engine of 250 mm bore runs at 150 rpm. Stroke to bore ratio is 1.6. The ratio of the length of connecting rod to the crank radius is 3. It is observed that steam pressure on head end side is 6 bar and on the crank end side is 0.5 bar, when the crank makes an angle of 40° with the inner dead centre. If the piston rod dia. is 50 mm. Determine for this configurations.

www.csvtuonline.com

www.csvtuonline.com

www.csvtuonline.com

(i) The torque exerted on the crank shaft

(ii) The thrust on the crank shaft bearings

(iii) Acceleration of the flywheel of mass 50 kg and radius of gyration of 0.6 m 10.

OR

(d) The turning moment diagram for a four stroke gas engine may be assumed for simplicity be represented by four triangles, the area of which from the line of zero pressure are as follows :

Suction stroke = 0.45×10^{-3} m^2,

Compression stroke = 1.7×10^{-3} m^2,

www.csvtuonline.com

www.csvtuonline.com

www.csvtuonline.com

Expansion stroke = 6.8×10^{-3} m^2. Exhaust stroke = 0.65×10^{-3} m^2. Each m^2 of area represents 3 MN-m of energy.

Assuming the resisting torque to be uniform, find the mass of the rim of a flywheel required to keep the speed between 202 and 198 rpm. The mean radius of the rim is 1.2 m. 10

www.csvtuonline.com

www.csvtuonline.com