CSVTUonline.com

Assume that rivets in double shear is 1.875 times stronger than in single shear. Design the joint with neat sketch. 14

c. An eccentrically loaded bracket is welded to the support as shown in Fig. 6. The permissible shear stress for the weld material is 55 N/mm^2 and the load is static. Determine the throat and leg dimensions for the welds. 14

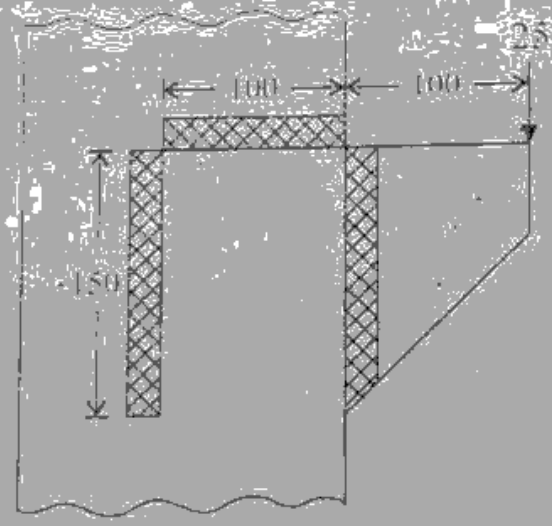

Fig. 6

CSVTUonline.com

337551(37)

BE (5th Semester)
Examination, Nov.-Dec., 2015

(New Scheme)

Machine Design-I

Time Allowed : 3 hours *Maximum Marks* : 80
Minimum Pass Marks : 28

Note : (*i*) Attempt **all** questions as directed.
(*ii*) Design data book by PSG is allowed in examination.
(*iii*) The figures in the right-hand margin indicate marks.

1. Part *(a)* is compulsory and attempt any *one* from parts *(b)* and *(c)* :

(a) Define stress concentration and state how its effect is considered. 2

(b) A rotating shaft, subjected to a non-rotating force of 5 kN and simply supported between two bearings *A* and *B* is shown in Fig. 1. The shaft is machined from plain carbon steel 30C 8 (S_{ut} = 500 N/mm^2) and the

CSVTUonline.com

CSVTUonline.com

expected reliability is 90%. What is the life of the shaft if notch sensitivity factor is 0·78? 14

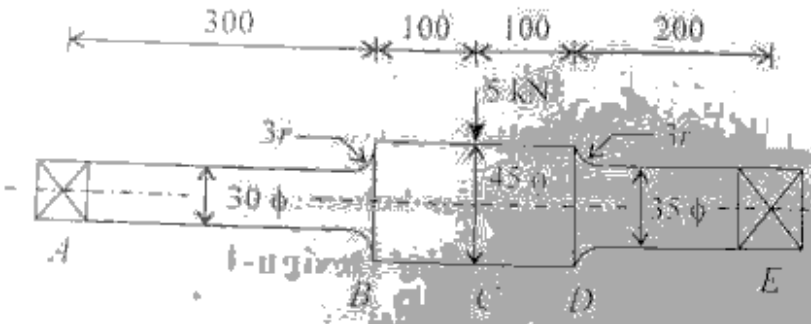

Fig. 1

(c) A polished steel bar is subjected to axial tensile force that varies from zero to P_{max}. It has groove 2 mm deep and having a radius of 3 mm. The theoretical stress concentration factor and notch sensitivity factor at the groove are 1·8 and 0·95 respectively. The outer diameter of the bar is 30 mm. The ultimate tensile strength of the bar is 1250 MPa. The endurance limit in reversed bending is 600 MPa. Find the maximum force that the bar can carry for 10^5 cycles with 90% reliability. 14

2. Part *(a)* is compulsory and attempt any *one* from parts *(b)* and *(c)* :

(a) Differentiate between saddle key and sunk key. 2

(b) It is required to design a socket and spigot cotter joint to connect two steel rods of equal diameter. Each rod is subjected to an axial tensile force of 50 kN. The material for the joint is plain carbon steel C 30. Assume $S_{yc} = 2 \cdot S_{yt}$ and $S_{sy} = 0 \cdot 5\, S_{yt}$. The value of FOS for rods, socket and spigot is 6 while that of cotter is 4. Design the joint and specify the dimensions of its components with neat sketch. 14

(c) Design a rigid flange coupling transmitting 37·5 kW power at 180 r.p.m. The material for shafts and keys is C 40 while that of flange is FG 200. Assume $S_{ys} = 1 \cdot 5\, S_{yt}$ and $S_{sy} = 0 \cdot 5\, S_{yt}$. The value of FOS for shafts and keys is 3 while that of flange is 6. Design the joint and specify the dimensions of its components with neat sketch. Assume a service factor of 1·5 for the application. 14

3. Part *(a)* is compulsory and attempt any *one* from parts *(b)* and *(c)* :

(a) A single-plate clutch consists of one pair of contacting surfaces. Because of space limitations, the outer diameter of friction disk is fixed as D. The permissible intensity of pressure is P and coefficient of friction is μ. Assuming uniform wear theory, show that the torque transmitting capacity of the clutch is maximum when (d/D) is equal to 0·577. 4

(b) A transmission shaft supporting a spur gear B and a pulley D is shown in Fig. 2.

The shaft is mounted on two bearings A and C. The diameter of the pulley and the pitch circle diameter of the gear are 450 mm and 300 mm respectively. The pulley transmits 20 kW power at 500 r.p.m. to the gear. P_1 and P_2 are belt tensions while P_t and P_r are tangential and radial components of gear tooth force.

Assume $P_1 = 3P_2$ and $P_r = P_t \tan(20°)$. The gear and pulley are keyed to the shaft. The material of the shaft is steel 50C4 (S_{ut} = 700 and S_{yt} = 460 N mm^{-2}). The factors K_b and K_t are 1·5 each. Determine the shaft diameter using ASME code : 12

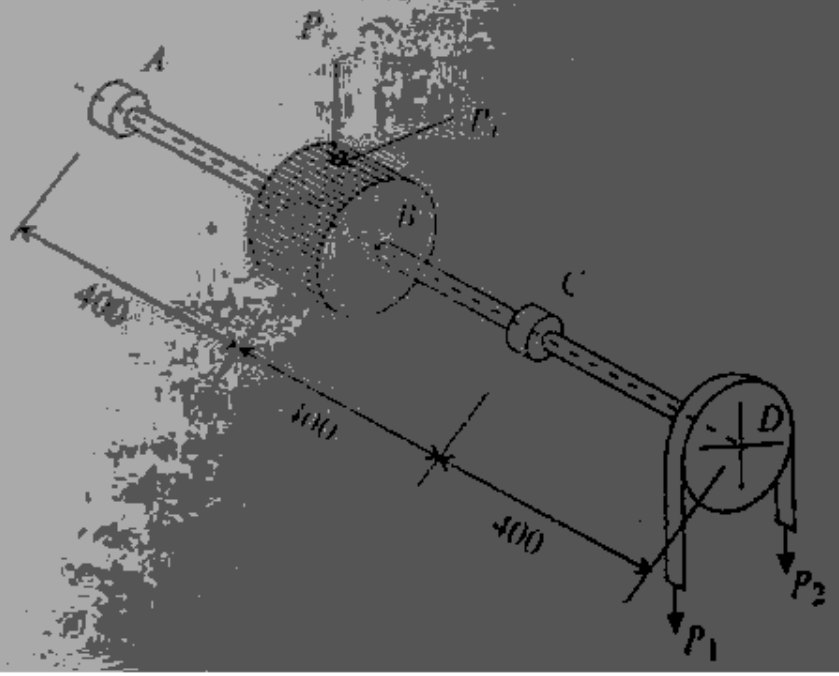

(c) A transmission shaft supporting a helical gear B and an overhung bevel gear D is shown in Fig. 3. The shaft is mounted on bearings at A and C. The pitch circle diameter of helical gear is 450 mm and the diameter of bevel gear at the forces is 450 mm. The gears are keyed to the shaft. The material of shaft is steel 45C8 (S_{ut} = 600 and S_{yt} = 380 N/mm^2). The factors K_b and K_t are 2·0 and 1·5 respectively. Determine the shaft diameter using ASME code 12

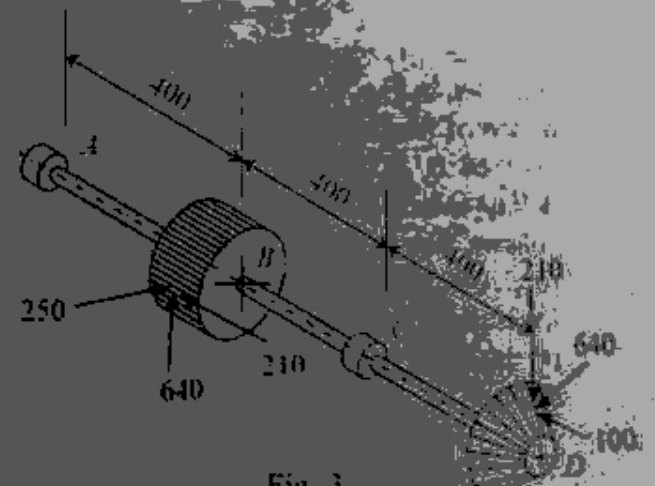

Fig. 3

4. Part (a) is compulsory and attempt any two from parts (b), (c) and (d) :

(a) What are the basic types of threads used in power screws? 5

(b) A steel plate subjected to a force of 5 kN and fixed to a channel by means of three

(Turn Over)

CSVTUonline.com

idential bolts is shown in Fig. 4. The bolts are made of plain carbon steel 30C8 (S_{yt} = 400 N/mm^2) and the factor of safety is 3. Determine the diameter of the shank : 7

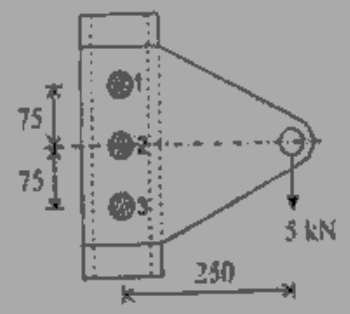

Fig. 4

(c) A bracket for supporting the travelling crane is shown in Fig. 5. The bracket is fixed by means of four identical bolts, two at *A* and two at *B*. A load of 5 kN is acting downwards at a distance of 250 mm from column. The bolts are made of steel 40C8 (S_{yt} = 380 N/mm^2) and factor of safety is 5. Determine the nominal diameter of the bolts on the basis of maximum principal stress. Assume (d_c = 0·8d) : 7

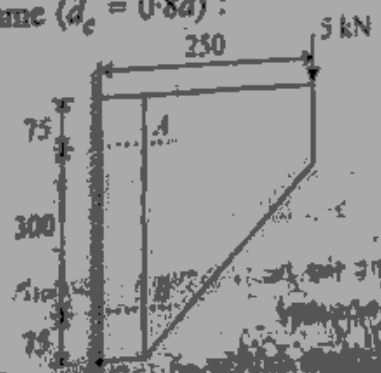

Fig. 5

(d) A screw has single start square threads of 80 mm nominal diameter and 10 mm pitch. The screw is exerting a maximum axial force of 10 kN. The mean radius of friction collar is 30 mm. The axial length of the nut is 40 mm. The coefficient of friction at the threads and the collar is 0·12. The mean diameter of the rim of the handwheel is 500 mm. Calculate—

(i) force exerted at the rim to drive the screw;

(ii) the efficiency of the device;

(iii) the bearing pressure on the threads in the nut. 7

5. Part *(a)* is compulsory and attempt any *one* from parts *(b)* and *(c)* :

(a) What are the different types of joints used in riveted joints? 2

(b) A boiler with 1·5 m inside diameter is subjected to internal pressure of 1·5 MPa. It is made of steel by triple rivet double strap longitudinal butt joint with equal straps. The pitch of rivets in outer row is twice the inner row and patter is zig-zag. The efficiency should be at least 80%. The permissible stresses in tension, shear and compression are 80 N/mm^2, 60 N/mm^2 and 120 N/mm^2 respectively.