Printed Pages– 9

Roll No. .....

D037711(037)

B. Tech. (Seventh Semester) Examination, Nov.-Dec. 2022

(Mech. Engg. Branch)

DESIGN OF TRANSMISSION SYSTEM

Time Allowed : Four hours

Maximum Marks : 100

Minimum Pass Marks : 35

Note *: All questions are compulsory. Part (a) of each unit is compulsory, carries 4 marks. Attempt any two parts from (b), (c) and (d).*

Unit-I

1. (a) Explain Gear tooth failure. 4

(b) It is required to design a pair of spur gears with 20° full depth involute teeth based on Lewis equation. The velocity factor is to be used to account for

dynamic load. The pinion shaft is connected to a 10 kW motor, running at 1440 rpm. The starting torque of motor is 150% of the rated torque. The speed reduction is 4 : 1. The pinion and gear are made of steel 40C8 (S_{ut} = 600 N/mm^2). The factor of safety can be taken as 1·5. Design the gear spur and suggest suitable surface hardness for the gears. 16

Or

(c) The layout of a two stage gear box is shown. The number of teeth on the gear are as follows : 16

$$z_1 = 20,\ z_2 = 50,\ z_3 = 20,\ z_4 = 50$$

Pinion 1 rotates at 1440 rpm in the anti-clockwise direction when observed from the left side of the page and transmits 10 kW of power to the gear train. The pressure angle is 20°. Draw a free-body diagram of the gear tooth forces and determine the reaction at bearings E and F.

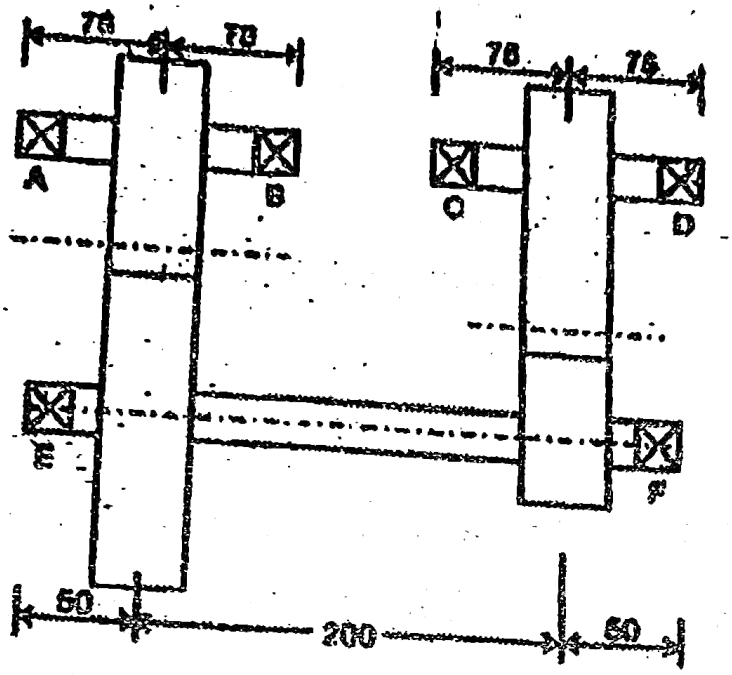

Unit-II

2. (a) Define Gears. What is vertual or formative helical gears? 4

(b) A pair of parallel helical gears consists of a 20 teeth pinion meshing with a 100 teeth gear. The pinion rotates at 720 rpm. The normal pressure angle is 20°, while the helix angle is 25°. The face width is 40 mm and the normal module is 4 mm. The pinion as well as the gear is made of steel 40C8 (S_{ut} = 600 N/mm^2) and heat treated to a surface hardness of 300 BHN. The service factor and the factor of

safety are 1·5 and 2 respectively. Assume that the velocity factor accounts for the dynamic load and calculate the power transmitting capacity of gears. 16

Or

(c) A pair of bevel gears, with 20° pressure angle, consists of a 20 teeth pinion meshing with a 30 teeth gear. The module is 4 mm, while the face width is 20 mm. The material for the pinion and gear is steel 50C4 (S_{ut} = 750 N/mm^2). The gear tooth are lapped and ground (class-3) and the surface hardness is 400 BHN. The pinion rotates at 500 rpm and receives 2·5 kW power from the electric motor. The starting torque of the motor is 150% of rated torque. Determine the factor of safety against bending failure and against pitting failure.

Unit-III

3. (a) What is surge in spring? Write the functions of spring. 4

(b) A helical compression spring made of circular wire is subjected to an axial force. Which varies from 2.5 kN to 3.5 kN. Over this range of force, the

deflection of the spring should be approximately 5 mm. The spring index can be taken as 5. The spring has square and ground ends. The spring is made of patented and cold-drawn steel wire with ultimate tensile strength of 1050 N/mm^2 and modulus of rigidity of 81370 N/mm^2. The permissible shear stress for the spring wire should be taken as 50% of the ultimate tensile strength. Design the spring and calculate : 8

(i) Wire diameter

(ii) Mean coil diameter

(iii) Number of effective coils

(iv) Total no. of coils

(v) Solid length of the spring

(vi) Free length of the spring

(vii) Rquired spring rate

(viii) Actual spring rate

(c) A semi-elliptic leaf spring used for automobile suspension consists of three extra full-length leaves and 15 graduated-length leaves, including the master

leaf. The centre-to-centre distance between two eyes of the spring is 1m. The maximum force that can act on the spring is 75 kN. For each leaf, the ratio of width to thickness is 9:1. The modulus of elasticity of the leaf material is 207000 N/mm^2. The leaves are pre-stressed in such a way that when the force is maximum, the stresses induced in all leaves are same and equal to 450 N/mm^2. Determine : 8

(i) The width and thickness of the leaves

(ii) The initial nip

(iii) The initial pre-load required to close the gap C between extra full-length leaves and graduated-length leaves.

(d) A single block brake with a torque capacity of 15 N-m is shown in Fig. The coefficient of friction is 0.3 and the maximum pressure on the brake lining is 1 N/mm^2. The width of the block is equal to its length. Calculate : 8

(i) the actuating force;

(ii) the dimensions of the block;

(iii) the resultant hinge-pin reaction; and

(iv) the rate of heat generated, if the brake Drum rotates at 50 rpm.

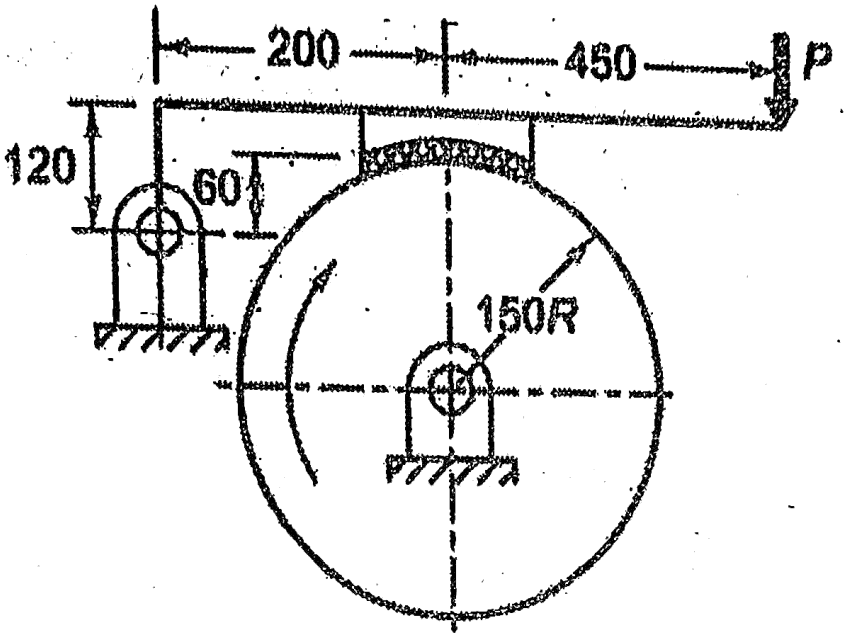

Unit-IV

4. (a) Differeniate between Hydrodynamic and Hydrostatic bearing. 4

(b) The following data is given for a hydrodynamic bearing used for electric motor : 8

Radial load = 1200 N

Journal speed = 1440 rpm

Journal diameter = 50 mm

Static load on the bearing = 350 N

The values of surface roughness (cla) of the journal and the bearing are 2 and 1 micron respectively. The minimum oil film thickness should be five times and the sum of surface roughness of the journal and the bearings. Determine :

(i) length of the bearing

(ii) radial clearance

(iii) minimum oil film thickness

(iv) viscosity of lubricant; and

(v) flow of lubricant

Select suitable oil for this application assuming the operating temperature as 65°.

(c) Derive the Petroff's equation. 8

(d) A ball bearing, subjected to a radial load of 5 kN, is expected to have a life of 8000h at 1450 rpm with a reliability of 99%. Calculate the dynamic load capacity of the bearing, so that it can be selected from the manufacturer's catalogue based on a reliability of 90%. 8

Unit-V

(a) What are the advantages and disadvantages of V belts over flat belts? Give applications of V-belts. 4

(b) It is required to design a chain drive to connect 5 kW, 1400 rpm electric motor to a drilling machine. The speed reduction is 3:1. The centre distance should be approximately 500 mm. 16

(i) Select a proper roller chain for the drive.

(ii) Determine the number of chain links

(iii) Specify the correct centre distance between the axes of sprockets.

Or

(c) It is required to select a V-belt drive to connect a 15 kW, 2880 rpm normal torque A.C. motor to a centrifugal pump, running at approximately 2400 rpm, for a service of 18 hours/day. The centre distance should be approximately 400 mm. Assume that pitch diameter of the driving pulley is 125 mm. 16