www.csvtuonline.com

Printed Pages – 8

337811 (37)

BE (8th Semester)

Examination, April-May, 2011

Branch : Mechanical

ROBOTICS

Time Allowed : Three Hours

Maximum Marks : 80

Minimum Pass Marks : 28

Note : Part (a) from each question is compulsory. Internal choice has given in each question.

Q. 1. (a) Define the term spatial manipulator and planar manipulator. 2

www.csvtuonline.com

www.csvtuonline.com

www.csvtuonline.com

[Attempt any two questions from part (b), (c) and (d)] :

(b) Describe the role of arm and wrist of a robotic manipulator. 7

(c) Discuss the difference between polar arm and articulated arm configuration. 7

(d) What are the control issues in robotic control ? Explain in brief. 7

Q. 2. (a) Define the term mapping. 2

(b) Explain rotation matrix with Euler angle representations and give their three main types of Euler angle representation. 10

www.csvtuonline.com

www.csvtuonline.com

OR

Determine a transformation matrix that represents a rotation of "α"-angle about the OX axis, followed by a translation of "b" unit of distance along the OZ axis, followed by a rotation of "ϕ" angle about the OV axis. Here OXYZ is fixed frame and OUVW is rotating frame. 10

(d) Define pure rotation and derive rotation matrix for ratating frame OUVW rotate about reference axis Y with "θ" degree. 4

Q. 3. (a) Define Inverse Kinematic Model. 2

www.csvtuonline.com

www.csvtuonline.com

www.csvtuonline.com

(b) What are the main parameters for a link for kinematic modeling. 14

For the 3-DOF (RRP) manipulator arm shown in Fig. (1) obtain the orientation and position of tool point "P" of the joint variable vector $q = [90°, -45°, 100\ mm]^T$ with $x_1 = 50$ mm and $x_2 = 40$ mm.

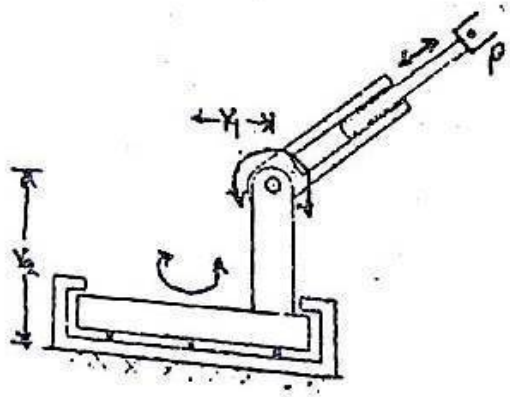

Figure-1

www.csvtuonline.com

www.csvtuonline.com

OR

Obtain the kinematic model of the manipulator with 5-DOF and test it for the home position. Determine the position and orientation of the end effector (tool point P) if the joint variable vector is $q = \left[\pi/4, -3\pi/4, \pi/2, \pi/4, \pi\right]^T$ and the link parameters are $L_1 = 50$, $L_2 = L_3 = 140$ and $L_5 = 20$. The 5-DOF manipulator shown in Fig-(2). 14

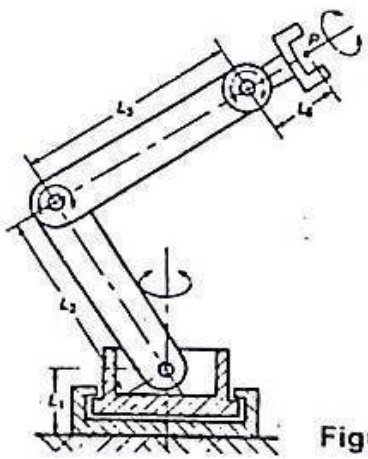

Figure-2

www.csvtuonline.com

www.csvtuonline.com

www.csvtuonline.com

Q. 4. (a) What are the problems of robot sensing ? 2

(Attempt any two questions from (b), (c) and (d)):

(b) Discuss the industrial and non industrial applications of vision controlled robots. 7

(c) What are the role of sensors in robotics based on their functions ? 7

(d) Describe Image Acquisition in brief 7

Q. 5. (a) Why a robot is considered as a 24 worker 2

(Attempt any two questions from (b), (c) and (d))

www.csvtuonline.com

www.csvtuonline.com

(b) Explain Arc-welding robotic system ? What characteristics an arc welding robotic system must have ? 7

(c) Discuss the assembly applications of Robot in detail. 7

(d) The workcell of a processing application is shown in Fig-3. The robot is deployed to pick the race material from conveyor, load into a machine centre, unload the finished part after machining is complete and place it into a pallet. Define the sequence of steps required to carry out this application. 7

www.csvtuonline.com

www.csvtuonline.com

www.csvtuonline.com

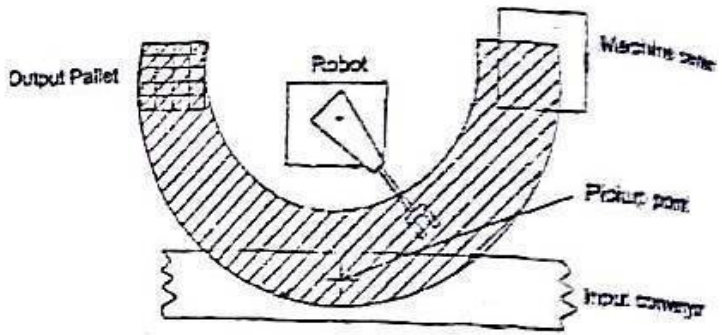

Figure-3

www.csvtuonline.com