www.csvtuonline.com

Printed Pages – 6 Roll No. : .....

224315(24)

024414(24)

Diploma in Engg. (Third Semester) Examination, Nov.-Dec., 2015

(Old Course)

(Elect. Engg. Branch)

ELECTRICAL CIRCUIT

Time Allowed : Three hours

Maximum Marks : 100

Minimum Pass Marks : 35

Note : *All questions are compulsory, unless mention otherwise.*

1. Solve : (any **two**)

(a) Explain unilateral circuit and bilateral circuit.

www.csvtuonline.com

www.csvtuonline.com

(b) Active electrical circuit and passive electrical circuit.

(c) Write the law of resistance.

2. Explain loop current methods and solve the following circuit. 10

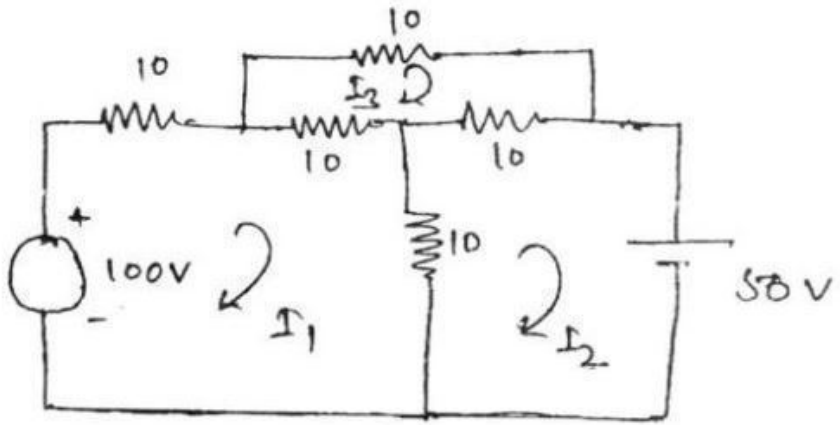

Or

Explain node voltage analysis and solve the following circuit. Find out the node voltage.

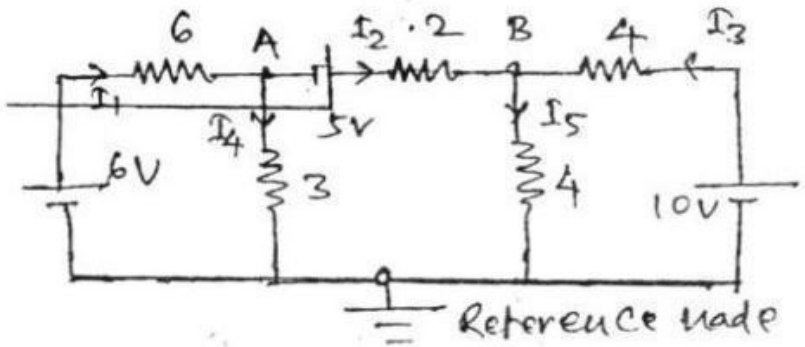

www.csvtuonline.com

www.csvtuonline.com

3. (a) Define following term in a.c. circuit : 5

(i) Phase difference

(ii) RMS value

(iii) Peak Factor

(iv) Reactive Power

(b) Explain the Star-Delta connection with an example. 5

4. (a) A voltage $v = 150 + j\,180$ is applied across and impedance and the current flowing is found to be $I = 5 - j\,4$. Determine : 5

(i) Scalar Impedance

(ii) Resistance

(iii) Reactance

(iv) Power consumed

(b) An a.c. series circuit bar a resistance of an inductance of 0·2 H and a capacitance of $60\,\mu F$.

Calculate :

(i) The resonance frequency

(ii) The circuit

(iii) The power at resonance

Give that applied voltage is 200 V.

www.csvtuonline.com

www.csvtuonline.com

5. With the help of superposition theorem, compute the current I_{ab} in the circuit. All resistances are in ohm. 10

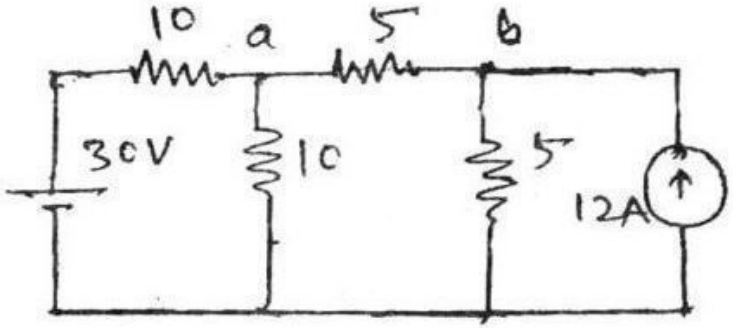

Or

Explain maximum power transfer theorem and prove that

$P_{max} = V^2 u / 4\,R_L$.

6. Determine the branch current in the network when the value of each branch resistance are in ohm. 10

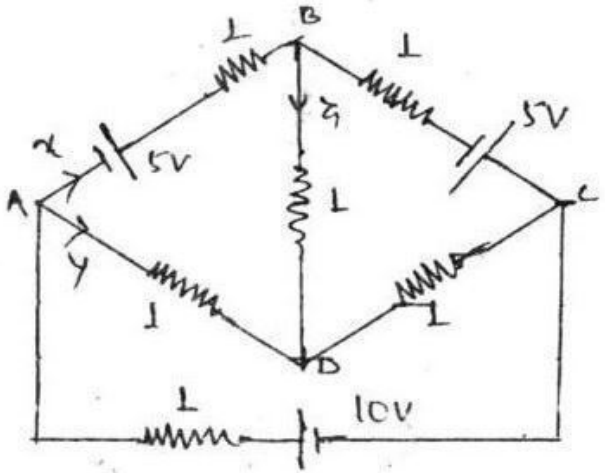

www.csvtuonline.com

www.csvtuonline.com

www.csvtuonline.com

7. A coil having a resistance 10 Ω and an inductance of 0·2 H is connected in series with a capacitor of 59·7 μF. The circuit is connected across a 100 V, 50 Hz a.c. Supply Calculate :

(i) the current flowing

(ii) the voltage across the capacitor

(iii) the voltage across the cool. Draw the vector diagram to scale. 10

8. A coil A of inductance 80 mH and resistance 120 Ω, is connected to a 230 V, 50 Hz single phase supply. In parallel with it in a 16 μF capacitor in series with a 40 μF non-inductive resister B.

Determine :

(i) The power factor of combine circuit

(ii) Total power taken from the supply 10

9. Three similar choke coil are connected in star to a 3 ϕ supply of the line currents are 15 A, the total power consumed is 11 kW and the volt-ampere input is 15 kVA. Find the line and phase voltage the VAR input and the reactance and resistance of each coil. 10

www.csvtuonline.com

www.csvtuonline.com

www.csvtuonline.com

www.csvtuonline.com

www.csvtuonline.com

www.csvtuonline.com

www.csvtuonline.com

10. Two wattmeters, W_1 and W_2 connected to read the input to a three-phase induction motor running unloaded, indicate 3 kW and 1 kW respectively. On increasing the load, the reading on W_1 increases while that on W_2 decrease and eventually revenses.

Explain the above phenomenon and find the unloaded power and power factor of the motor. 10

www.csvtuonline.com

www.csvtuonline.com

www.csvtuonline.com