www.csvtuonline.com

Printed Pages – 6 Roll No. : .....

237614(37)
037813(37)

Diploma in Engineering (Sixth Semester) Examination, April-May 2016

(Old Course)

(Mech. Engg. Branch)

ESTIMATING & COSTING

Time Allowed : Three hours

Maximum Marks : 100

Minimum Pass Marks : 35

Note : *All questions are compulsory. All questions carry equal marks.*

1. (a) What do you mean by estimating and write the aims of estimating? 5

www.csvtuonline.com

www.csvtuonline.com

(b) Write the different constituents of estimation and explain each of them in brief. 5

2. Differentiate between estimating and costing and write notes on aims of costing. 10

A factory is producing 1000 bolts and nuts per hour on a machine. Its material cost is Rs. 375, labour cost is Rs. 245 and direct expense is Rs. 80. The factory on cost is 150% of the total labour cost and office on-cost is 30% of the total factory cost. If the selling price of each bolt and nut is Rs. 1·30. Calculate whether the management is going in loss or gain and by what amount?

3. Estimate the weight of C. I. used in manufacturing step pulley as shown in fig. given below. Assume density of C. I. as 7·2 gm/cc. 10

www.csvtuonline.com

www.csvtuonline.com

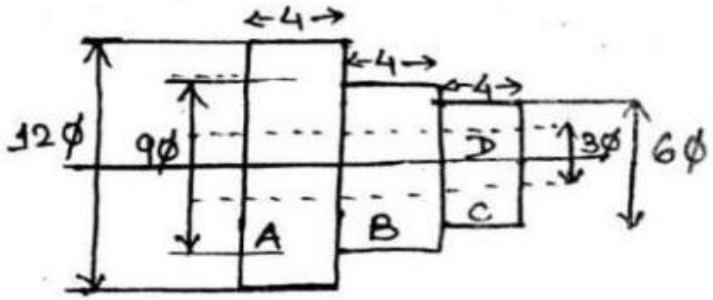

fig.

All dimensions are in CM

4. (a) Define Budgeting? Write the objects of budgeting and its advantages. 5

(b) Define and explain briefly, what do you understand by : 5

(i) Sales budget

(ii) Fixed budget

(iii) Cash budget

(iv) Direct labour budget

(v) Financial budget

5. A circular aluminium rod is to be reduced from 5 to 4 cm for a length of 8 cm in two cuts. Assuming cutting speed

www.csvtuonline.com

www.csvtuonline.com

as 300 m/min and feed as 0·01 cm/revolution. Estimate the time required for turning. 10

6. A lap joint is to be prepared from 9·5 mm mild steel using flat welding position and 6 mm electrode current used is 250 amps and voltage 30 volts, welding speed is 12 metres/hour; and 0·34 kg of metal is deposited per meter length of joints. Labour cost - Rs. 2·5 /hour, Power - Re 0·20 /kwh and electrode Rs. 40 /kg efficiency of the machine is 50% and operation factor is 60%. Calculate the cost of labour, power and electrode per metre of weld? 10

7. (a) Explain Forging? List the types of forging and in brief explain the forging operations. 5

(b) A square bar of 3 cm side and 25 cm length is to be converted by hand forging into a bar of hexagonal section having each side equal to 1·5 cm. Calculate the length of hexagonal bar produced; consider scale loss to be 7%? 5

8. Estimating the total cost of 20 C. I. flanged pipe casting shown in fig. as given below. Assuming the following data : 10

www.csvtuonline.com

www.csvtuonline.com

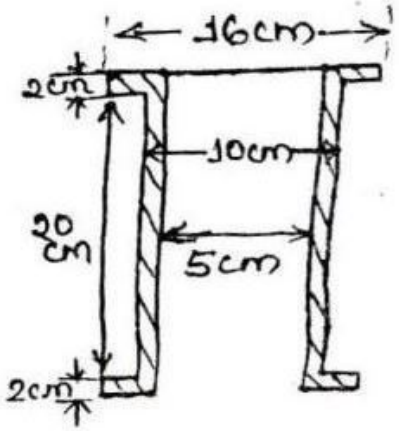

(a) Cost of C. I. = Rs. 5 per kg.

(b) Cost of process scrap = Rs. 2 per kg.

(c) Process scrap = 2% of net weight of casting

(d) Moulding and pouring charges = Rs. 2·00 /per piece.

(e) Casting removal and cleaning = Re 0·50 /piece.

(f) Administrative overheads = 5% factory cost.

(g) Selling overheads = 70% administrative overhead.

9. Cylindrical drum of size 1·5 m high and 1 m mean diameter are to be fabricated from sheet of 5 mm thickness by grooved seam joint and both the covers should be joined with single seam joint. Calculate the material cost, if sheet is available @ Rs. 150 per m^2? 10

www.csvtuonline.com

www.csvtuonline.com

10. (a) Explain jigs and fixtures and their advantages. 5

(b) Explain different joining method used in fabrication. 5

www.csvtuonline.com