Unit 1:

Overview of Digital design with Verilog HDL

Evolution of CAD,

Digital circuit design has evolved rapidly over the last 25 years. Integrated circuits were then invented where logic gates were placed on a single chip. The first integrated circuit (IC) chips were SS1 (Small Scale Integration) chips where the gate count was very small. As technologies became sophisticated, designers were able to place circuits with hundreds of gates on a chip. These chips were called MS1 (Medium Scale Integration) chips. With the advent of LSI (Large Scale Integration), designers could put thousands of gates on a single chip. At this point, design processes started getting very complicated, and designers felt the need to automate these processes. Computer Aided Design (CAD) techniques began to evolve

Chip designers began to use circuit and logic simulation techniques to verify the functionality of building blocks of the order of about 100 transistors. The circuits were still tested on the breadboard, and the layout was done on paper or by hand on a graphic computer terminal.

With the advent of VLSI (Very Large Scale Integration) technology, designers could design single chips with more than 100,000 transistors. Because of the complexity of these circuits, it was not possible to verify these circuits on a breadboard. Computer-aided techniques became critical for verification and design of VLSI digital circuits. Computer programs to do automatic placement and routing of circuit layouts also became popular. Logic simulators came into existence to verify the functionality of these circuits before they were fabricated.

Emergence of HDLs

In the digital design field, designers felt the need for a standard language to describe digital circuits. Thus, ***Hardware Description Languages*** **(HDLs)** came into existence. HDLs allowed the designers to model the concurrency of processes found in hardware elements. Hardware description languages such as ***Verilog HDL*** **and VHDL** became popular. HDLs allowed the designers to model the concurrency of processes found in hardware elements

Logic synthesis pushed the HDLs into the forefront of digital design. Designers no longer had to manually place gates to build digital circuits. They could describe complex circuits at an abstract level in terms of functionality and data flow by designing those circuits in HDLs. Logic synthesis tools would implement the specified functionality in terms of gates and gate interconnections

Design Flow

A typical design flow for designing VLSI IC circuits is shown in the following Figure.

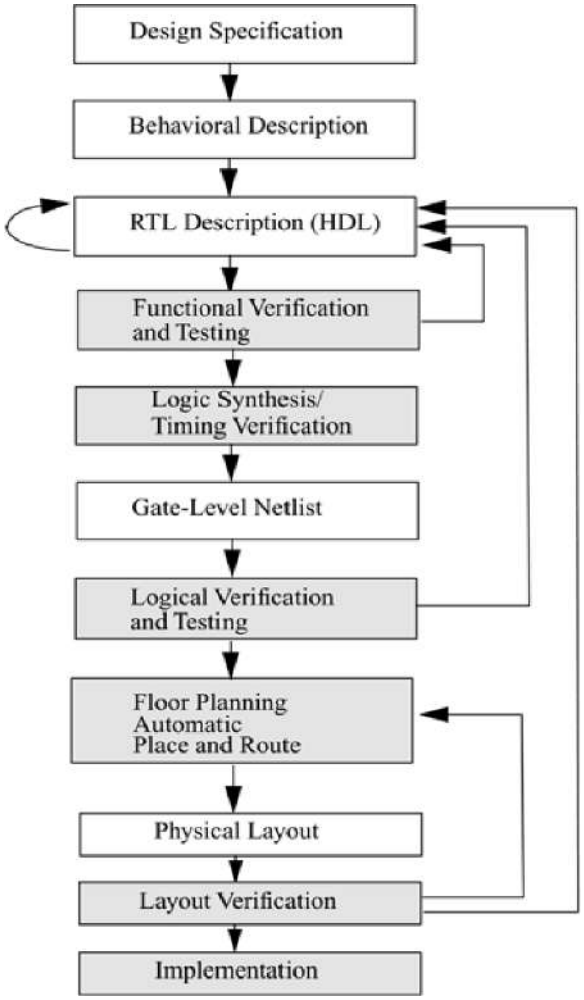

Design Specification:

Design Specifications describe abstractly the functionality, interface, and overall architecture of the digital circuit to be designed.

Behavioural description:

A behavioural description is then created to analyse the design in terms of functionality, performance and compliance to standards, and other high-level issues. Behavioural descriptions can be written with HDLs.

RTL Description and Functional verification:

The behavioural description is manually converted to an RTL description. The designer has to describe the data flow that will implement the desired digital circuit. From this point onward, the design process is done with the assistance of CAD tools.

Logic synthesis tools convert the RTL description to a gate-level netlist.

A gate level netlist is a description of the circuit in terms of gates and connections between them.

The gate-level netlist is input to an Automatic Place and Route tool, which creates a layout.

The layout is verified and then fabricated on chip.

Recently Behavioural synthesis tools are emerging. These tools can create RTL descriptions from a behavioural or algorithmic description of the circuit. As these tools mature, digital circuit design will become similar to high-level computer programming

Need of Verilog HDL:

- Designs can be described at a very abstract level by use of HDLs. Designers can write their RTL description without choosing a specific fabrication technology. If a new technology emerges, designers need not have to redesign their circuit Logic.
- By describing designs in HDLs, functional verification of the design can be done early in the design cycle
- This provides a precise representation of the design.

Trends in HDLs:

1. The current trend in design in HDL is at RTL level, because logic synthesis tools can be created easily.
2. Behavioural synthesis has recently emerged. As these tools improve, designers will be able to design directly in terms of algorithms and the behaviour of the circuit and then use CAD tools to do the translation.
3. For very high speed circuits like microprocessors, the gate level netlist provided by logic synthesis tools is not optimal. In such cases, designers can mix gate-level description directly into the RTL description to achieve optimum results.
4. A trend that is emerging for system-level design is a mixed bottom-up methodology. This is done to reduce development costs and compress design schedules.

2. Hierarchical Modelling Concepts:

Design methodologies:

There are two basic types of digital design methodologies:

1. Top-down design methodology and
2. Bottom-up design methodology.

Top-Down design methodology:

The block diagram of top-down design process is as shown below

In a top-down design methodology, the top-level blocks are defined. The sub-blocks which are necessary to build the top-level block are identified. The sub-blocks are further subdivided to leaf cells, which are the cells that cannot further be divided.

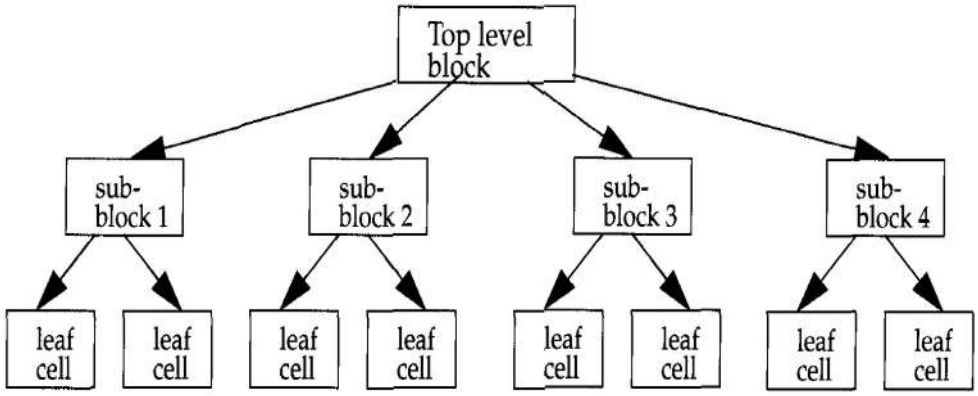

Bottom-up design methodology:

The block diagram of Bottom – up design process is as shown below

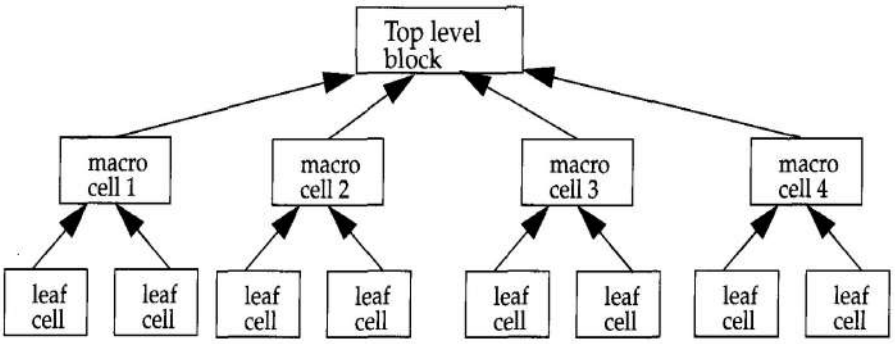

In a bottom-up design methodology, the building blocks that are available are identified. Bigger cells are built, using these building blocks. These cells are then used for higher-level blocks until the top-level block in the design is built.

Typically, a combination of top-down and bottom-up flows is used.

Example:

Consider a negative edge-triggered 4 bit ripple carry counter. The circuit diagram is as shown below

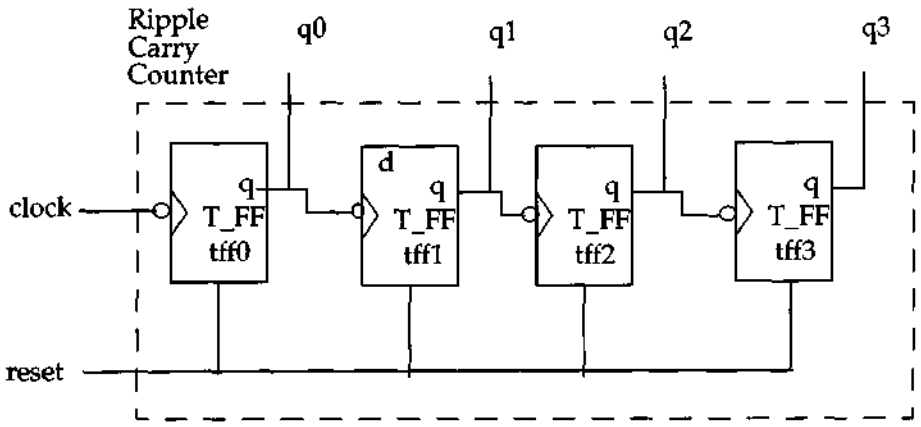

The ripple carry counter shown in Figure is made up of negative edge triggered toggle flip-flops (T-FF). Each of the T-FFs can be made up from negative edge-triggered D-flip-flops (D-FF) and inverters. Thus, the ripple carry counter is built in a hierarchical fashion by using building blocks. The diagram for the design hierarchy is shown below.

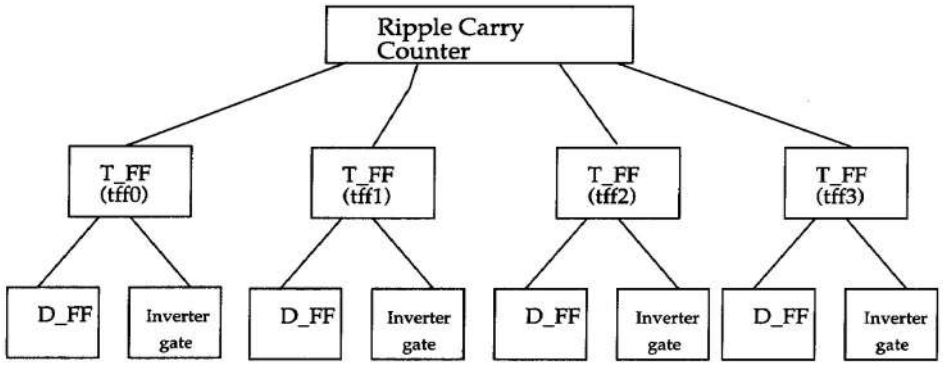

In a top-down design methodology, the functionality of the top-level block i.e., the ripple carry counter is specified. Then, the counter with T-FFs.is implemented which is built with the T-FFs from the D-FF and an additional inverter gate. Thus, bigger blocks are broken into smaller building sub-blocks until the blocks cannot be broken further.

The bottom-up methodology flows in the opposite direction. The top-level building blocks are built using small building blocks.

e.g., D-FF is built from **and** and **or** gates, and T-FFs are built using D-FF and inverter gates.

Modules

A module is the basic building block in Verilog. In Verilog, a module is declared by the keyword **module.** A corresponding keyword **endmodule** must appear at the end of the module definition. Each module must have **a module-name**, which is the identifier for the module, and a **module-terminal-list**, which describes the input and output terminals of the module.

The Syntax is

module<module-name> (<module-terminal-list>)

<module internals>

Endmodule

Example:

Consider T- FF. The module for T-FF is as shown below.

module T-FF (q, clock, reset);

.

.

<functionality of T-flip-flop>

endmodule

Internals of each module can be defined at *four* levels of abstraction, depending on the needs of the design. They are

1. Behavioural or algorithmic level
2. Dataflow level
3. Gate level
4. Switch level

Behavioural or algorithmic level :

- This is the highest level of abstraction provided by Verilog HDL.
- A module can be implemented in terms of the desired design algorithm without considering the hardware implementation details.
- It specifies the circuit in terms of its expected behaviour.
- Designing at this level is very similar to C programming.

Dataflow level

- At this level the module is designed by specifying the data flow.
- This design describes how data flows between hardware registers and how the data is processed in the design
- This style is similar to logical equations.
- The specification is comprised of expressions made up of input signals and assigned to outputs. .

Gate level (Structural level)

- The module is implemented in terms of logic gates and interconnections between these gates.
- It resembles a schematic drawing with components connected with signals.

- A change in the value of any input signal of a component activates the component. If two or more components are activated concurrently, they will perform their actions concurrently as well.
- Since logic gate is most popular component, Verilog has a predefined set of logic gates known as ***primitives***. Any digital circuit can be built from these primitives.

Switch level

- This is the lowest level of abstraction in Verilog.
- A module can be implemented in terms of switches, storage nodes, and the interconnections between them.
- Design at this level requires knowledge of switch-level implementation details.

Instances:

A module provides a template from which actual objects are created. When a module is invoked, Verilog creates a unique object from the template. Each object has its own name, variables, parameters and Input/output interface. The process of creating objects from a module template is called ***instantiation***, and the objects are called ***instances***

{Explanation:

The difference between these two can be summed up as follows: A module position is a container in which you can assign modules so they appear on the front end. A module instance is a single module, injected directly into a specific place in the page}

Differences between modules and module instances:

Modules are the basic building blocks in Verilog. **Modules are used in a design by instantiation.** An instance of a module has a unique identity and is different from other instances of the same module. Each instance has an independent copy of the internals of the module

Components of a Simulation

Once a design block is completed, it must be tested. The functionality of the design block can be tested by applying stimulus and checking results. Such a block is called the ***stimulus* block**. The stimulus block is also commonly called a **test bench**.

There are two distinct components in a simulation:

- Stimulus block and
- . Design block

A stimulus block is used to test the design block. The stimulus block is usually the top-level block. There are two styles of stimulus application.

In the first style, the stimulus block instantiates the design block and directly drives the signals in the design block. The block diagram is as shown below.

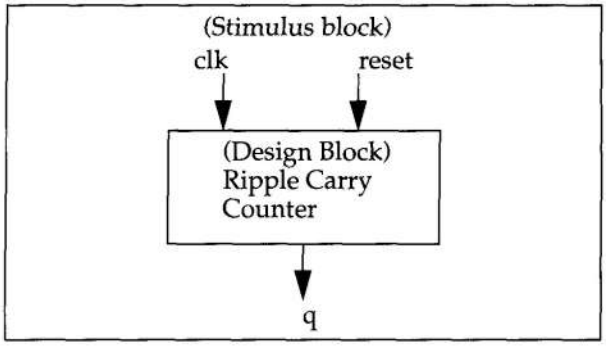

Here the stimulus block becomes the top-level block. It manipulates signals clk and reset, and it checks and displays output signal q

The second style of applying stimulus is to instantiate both the stimulus and design blocks in a top-level dummy module. The stimulus block interacts with the design block only through the interface. This style of applying stimulus is shown below.

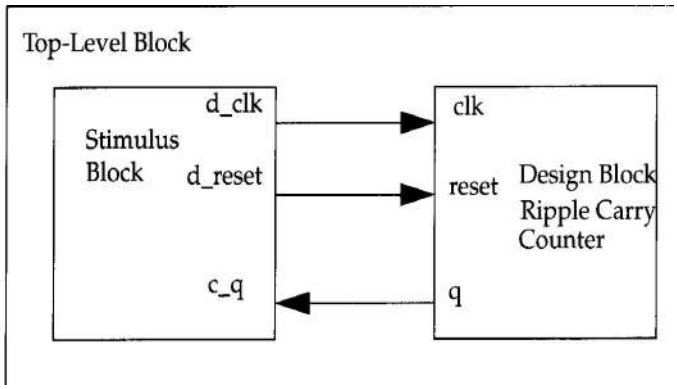

The stimulus module drives the signals d-clk and d-reset, which are connected to the signals clk and reset in the design block. It also checks and displays signal c-q, which is connected to the signal q in the design block

The function of top-level block is simply to instantiate the design and stimulus blocks.

Example:

Consider ripple carry counter. The design block and the stimulus block are defined. The stimulus is applied to the design block and the outputs are monitored. The circuit is as shown below

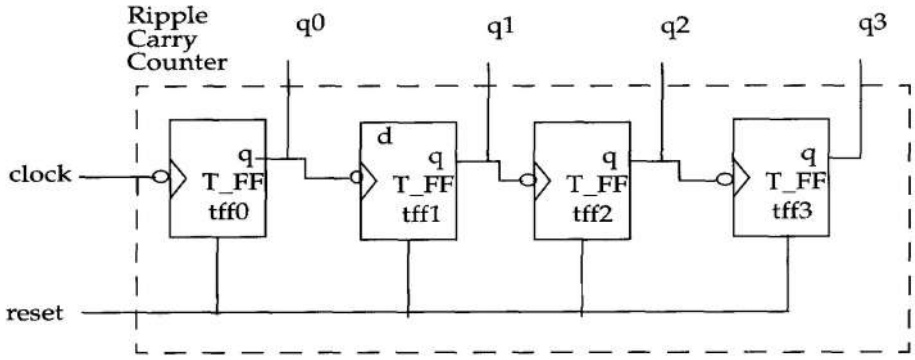

Design Block

Let us consider top-down design methodology. First, the Verilog description of Ripple carry counter which is the top-level design block is written.

Module ripple-carry-counter(q, clk, reset) ;

output [3:0]q;

input clk, reset

```
T-FF tff0 (q[0] ,clk, reset);1`234
T-FF tff l (q[l] ,q[0], reset);
T-FF tff 2 (q[2] ,q[l], reset);
T-FF tff 3 (q[3] ,q[2], reset);
endmodule
```

In the above module, four instances of the module TFF (T-flip-flop) are used. Therefore, the internals of the module T-FF must be defined.

```
module T-FF (q, clk, reset) ;
output q;
input clk, reset;
wire d;
D-FF dff0 (q, d, clk, reset);
notnl(d, q) ; // not is a Verilog-provided primitive. case sensitive
endmodule
```

Since T-FF instantiates D-FF, the internals of module D-FF must be defined.

```
// module D-FF with synchronous reset
module D-FF(q, d, clk, reset) ;
output q;
input d, clk, reset;
reg q;
always @ (posedge,  reset or negedgeclk)
if (reset)
q = l'b0;
else
q = d;
endmodule
```

All modules have been defined down to the lowest-level leaf cells in the design methodology. The design block is now complete.

Stimulus Block:

Now the stimulus block is written to check if the ripple carry counter design is functioning correctly. In this case, the signals clk and reset are controlled so that the regular function of the ripple carry counter and the asynchronous reset mechanism are both tested. The wave forms are as shown below.

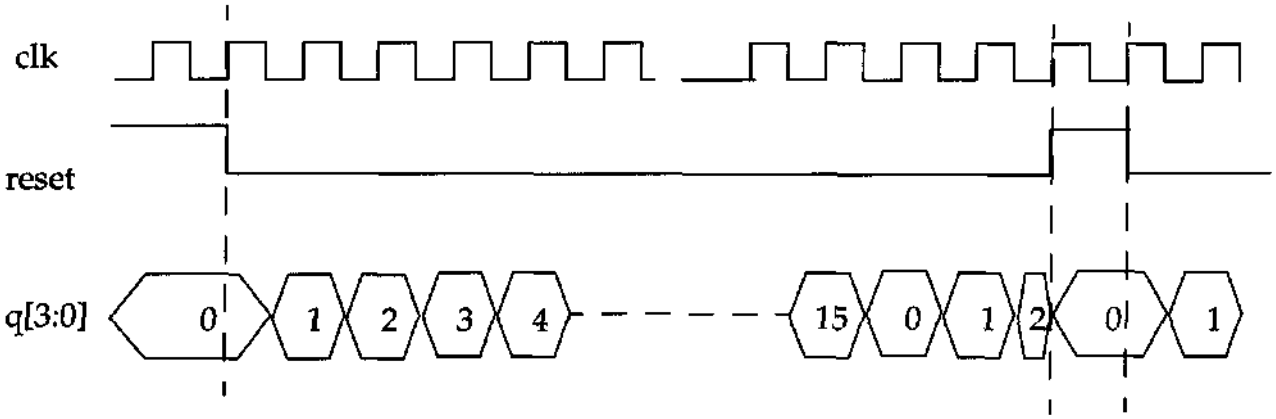

Now the stimulus block is written to know how the design block is instantiated in the stimulus block that will create the above waveforms

Here the cycle time for clk is 10 units; the *reset* signal stays up from time 0 to 15 and then goes up again from time 195 to 205. Output q counts from 0 to 15.

```
module stimulus;
reg clk;
reg reset;
wire [3:0] q;
// instantiate the design block
ripple-carry-counterrl (q, clk, reset);
// Control the clk signal that drives the design block.Cycle time = l0 initial
clk = l'b0; //set clk to 0
always
#5 clk = ~clk;
//toggle clk every 5 time units
// Control the reset signal that drives the design block
// reset is asserted from 0 to 20 and from 200 to 220 initial
begin
reset = l'bl;
#l5 reset = l'b0;
#l80 reset = l'bl;
#l0 reset = l'b0;
#20 $finish; //terminate the simulation
end
// Monitor the outputs
endmodule
```

3. Basic concepts:

The digital circuits can be represented in textual form in Verilog. The code written in textual form is called source code. The source code is created with the combinations of character and words which are called **KEYWORDS** and SYNTAX / SEMANTICS. These are called Lexical tokens. Combination of more than one lexical tokens forms LEXICAL CONVENTIOINS

LEXICAL CONVENTIOINS

Lexical tokens in Verilog HDL are given below.

- White space
- Comment
- Operator
- Number
- String
- Identifier
- Keyword

White space (Blank spaces):

White space is **a term used to represent the characters for spaces, tabs, newlines .**White spaces are used in stings which can be incorporated using double quotes (“). The semantics for white spaces in the string is as shown below:

Escape string	Character produced by escape string
\b	Blank space
\n	New line character
\t	Tab character
\\	\ character
\”	“ character

Comments:

There are two ways to write comments in Verilog. **A single line comment starts with // and tells Verilog compiler to treat everything after this point to the end of the line as a comment**. A multiple-line comment starts with /* and ends with */ and cannot be nested.

Comments are used to increase the readability of code. Comments are ignored by the simulator.

Example:

a = b &&c; // This is a one-line comment

/ * This is a multiple line

comment* /

/ * This is / * an illegal Binary operator – which worsl* / comment * /

Operators:

The operation which is to be performed is decided by operators. There are three kinds of operators available in Verilog. They are

1. *Unary operator* – which works on single operands

   Eg: a = ~ b; //~ is a unary operator. b is the operand

2. *Binary operator* – which works on two operands

   Eg: a = b &&c; // &&is a binary operator. b and c are operands

3. *Ternary operator*– which works on three operands. A question mark and a colon separate the three targets of the operation.

   Eg: a = b ?c :d; // ?: is a ternary operator. b, c and d are operands

Number Specification:

There are two types of number specification in Verilog:

- Sized and
- Unsized

Sized numbers:

Sized numbers are represented as *<size>'<base format><number>*.

- *Size* is written only in decimal and specifies the number of bits in the number.
- Legal base formats are decimal *('d* or 'D), hexadecimal *('h* or 'H), binary *('b* or 'B) and octal *('*oor *'O)*.
- The number is specified as consecutive digits from *0, 1, 2,3,4,5,* 6, *7, 8, 9, a, b, c, d, e, f.* Only a subset of these digits is legal for a particular base. Uppercase letters are legal for number specification

Example:

4'bllll // This is a 4-bit binary number

l2'habc // This is a 12-bit hexadecimal number

16'd255 // This is a 16-bit decimal number.

Unsized numbers

Numbers that are specified without a <base *format*>specification are decimal numbers by default. Numbers that are written without a <size> specification have a default number of bits of 32.

Example:

23456 // 23456 is a 32-bit decimal number by default

'hc3 // c3is a 32-bit hexadecimal number

'o21 // 21 is a 32-bit octal number

X or Z values:

Verilog has two symbols for unknown and high impedance values. An unknown value is denoted by an X. A high impedance value is denoted by z.

Example:

12'h13x // 13x is a 12-bit hex number; 4 least significant bits unknown

6'hx //x is a 6-bit hex number

32'bz //z is a 32-bit high impedance number

Negative numbers

- Negative numbers can be specified by putting a minus sign before the size for a constant number.
- Negative numbers are stored as **compliment two** and the minus sign must be included before the specification of size. [It is illegal to have a minus sign between <base format> and <number>].

Example:

-10'd5 // 10 bit negative number stored as 2's complement of 5.

-6' d3 // 6-bit negative number stored as 2's complement of 3

4'd -2 // Illegal specification

Underscore characters and question marks:

An underscore character "-" is allowed anywhere in a number except the first character. Underscore characters are allowed only to improve readability of numbers and are ignored by Verilog.

A question mark "?" is the Verilog HDL alternative for z when used in a number. The ?is used to enhance readability in the casex and casez statements.

Example:

12'b1111_0000_1010// Use of underline characters for readability

4'b10?? // Equivalent of a 4'bl0zz

Strings

- A string is a sequence of characters that are enclosed by double quotes.
- The restriction on a string is that it must be contained on a single line, that is, without a carriage return. It cannot be on multiple lines.

Example:

"Hello Verilog World" // is a string
'a / b" // is a string

Keywords and Identifiers:

- Keywords are **special identifiers** reserved to define the language constructs.
- Keywords are in lowercase.

Example: module, wire, assign, endmodule etc.,

Identifiers are names given to objects.

- Identifiers are Made up of alphanumeric characters, the underscore (_) and the dollar sign($)
- Case sensitive.
- Start with an alphabetic character or an underscore.
- They cannot start with a number or a $ sign

Example:

reg value; // **reg** is a keyword; **value** is an identifier

input clk; // **input** is a keyword, **clk** is an identifier

Escaped Identifiers

- *Escaped identifiers* begin with the backslash (\ ) character and end with whitespace (space, tab, or newline).
- All characters between backslash and whitespace are processed literally.
- Any printable ASCII character can be included in escaped identifiers.

Example:

```
\a+b-c
\**my_name**
```

Data Types:

A data type in Verilog is designed to represent the data storage and transmission. The 10 data types used in Verilog are –

1. Value Set
2. Nets
3. Registers
4. Vectors
5. Numbers –Integer and Real
6. Simulation Time
7. Arrays
8. Memories
9. Parameters
10. Strings

Value Set

Verilog supports four values and eight strengths to model the functionality of real hardware. The four value levels are

Value Level	Condition in Hardware Circuits
1	Logic one, true condition Logic
0	logic zero, false condition
X	Unknown value
z	High impedance, floating state

In addition to logic values, strength levels are often used to resolve which value should appear on a net or gate output.

There are two types of strengths: drive strengths and charge strengths.

The drive strength types are - **supply**, **strong**, **pull**, **weak**, and **highz** strengths

The charge strength types are -**large**, **medium** and **small** strengths

Strength Level	Type	Degree
supply	Driving	strongest
strong	Driving	
pull	Driving	
Large	Storage	
Weak	Driving	
Medium	Storage	
small	Storage	
highz	high impedance	Weakest

When signals combine, their strengths and values shall determine the strength and value of the resulting signal in accordance with the principle.

1. **If two signals of unequal strengths are driven on a wire, the stronger signal prevails**

Example: If two signals of strength **strong1** and **weak0** drive

2. **If two signals of equal strengths are driven on a wire, the result is unknown.**

Example:
If two signals of strength **strong l** and **strong 0** conflicts, the result is an **X.**

Nets:

The nets variables represent the physical connection between structural entities. They do not store values. They have the value of their drivers.

Example:

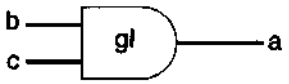

In the Figure net *a* is connected to the output of *and* gate *gl.* Net *a*will continuously assume the value computed at the input of gate *gl,* which is *b* & c

- Nets are declared with the keyword **wire**.
- A wire represents a physical wire in a circuit and is used to connect gates or modules. A wire does not store its value.
- They are one-bit values except in vectors.
- The default value of a net is **Z.**
- ***nets*** not a keyword but represents a class of data types such as w i r e , wand, wor, tri, triand, trior, trireg, etc.

Example:

wire a; // Declare net a for the above circuit

wire b,c; // Declare two wires b, c for the above circuit

Registers:

- Registers are data storage elements. They retain value until another value is placed onto them.
- *Register* is a variable that can hold a value.
- Unlike a net, a register does not need a driver.

- Verilog registers do not need a clock.
- Values of registers can be changed anytime in a simulation byassigning a new value to the register.
- Register data types are commonly declared by the keyword **reg**.
- The default value for a reg data type is **X.**

Example:

```
reg reset;
initial
begin
reset = l'bl;
#l00 reset = l'b0;
  end
```

Vectors

Nets or reg data types can be declared as vectors (multiple bit widths). If bit width is not specified, the default is scalar (l-bit).

Example:

wire a; // scalar net variable, default

wire [7:0] bus; // 8-bit bus

The left number in the squared brackets is always the most significant bit of the vector.

Integer, Real and Time Register Data Types

Integer

- An integer is a variable data type that stores the value until next assignment.
- Integers are declared by the keyword **integer.** The width for an integershould be at least 32 bits.
- **Registers declared as data type reg store values as unsigned quantities, whereas integers store values as signed quantities**.

Real

- Real number constants and real register data types are declared with the keyword **real**.
- They can be specified in decimal notation (e.g., 3.14) or in scientific notation (e.g., 3e6, which is 3 X 10^6).
- Real numbers cannot have a range declaration and their default value is 0. When a real value is assigned to an integer, the real number is rounded off to the nearest integer.

Time

- Verilog simulation is done with respect to *simulation time.*
- A time variable is declared with the keyword **time**.
- The width for time register data types is at least 64 bits.

Arrays

- Arrays are used in Verilog for reg, integer, **time** and *vector* register data types. Arrays are not used for real variables.
- Each element of the array can be used as a scalar or vector net.
- **Arrays are accessed by**
- **<array-name> [<subscript>l.**
- Multidimensional arrays are not permitted in Verilog.
- **The difference between a vector and an array is - vector is a single element that is n-bits wide but arrays are multiple elements that are l-bit or n-bits wide.**

Example:

integer count[0:7]; //an array of 8 count variables

Memories

- In digital simulation, register files, RAMS, and ROMs are modeled .
- Memories are modeled in Verilog as one dimensional array of registers.
- Each element of the array is known as a word.
- Each word can be one or more bits.
- Depth of memory should be declared by specifying a range following the memory identifier

Example: the memory **reg** [5:0]

Parameters

- Constants in Verilog are defined in a module by the keyword **parameter**.
- Parameters cannot be used as variables.
- Module instances can be altered by changing the value of a parameter.

Example:

parameter port-id = 5; //Defines a constant port-id

parameter cache_line_width = 256; //constant defines width of cache line

Strings

- In **Verilog**, **string** literals are just packed arrays of bits (or a bit-vector).
- Strings are the characters stored in reg data type.
- The width of the register variables must be large enough to hold the string.
- Each character in the string takes up 8 bits (1 byte).
- If the width of the register is greater than the size of the string, Verilog fills bits to the left of the string with zeros.
- If the register width is smaller than the string width, Verilog truncates the leftmost bits of the string.

Example:

reg [8*18:1] string-value;

//Declare a variable that is l8 bytes wide, each 8 bit wide.

System Tasks

Verilog contains the pre-defined system tasks and functions which provide common operations .All system tasks appear in the form ***$<keyword>.*** Operations such as displaying onthe screen, monitoring values, stopping, and finishing are done by system tasks.

Task	Function
To display on screen	**$display**
For monitoring values	**$monitor**
Stopping and finishing simulation	**$time**
Terminate simulation	**$finish**

Compiler Directives

All compiler directives are defined by using the ' ***<keyword>***construct. Compiler directives begin with **"`"** an accent grave**.** The compiler directives tell the compiler the method of processing its input. Some of the complier directives are-

1. **`define**
2. **`include**

The ***'define* directive** is used to define text macros in Verilog. The defined constants or text macros are used in the Verilog code by preceding them with a ' (back tick).

Example:

//define a text macro that defines default word size

//Used as 'WORD-SIZE in the code

'define WORD-SIZE 32

'define WORD-REG reg [31:0]

The ***' include directive*** includes the entire contents of Verilog source file in another Verilog file during compilation. It is used to include header files, which contain global or commonly used definitions

Eg:

// Include the file header.v, which contains declarations in the

// main verilog file design.v.

'include header.v

4. Modules and Ports

A module is a block of Verilog code that implements certain functionality. The *module name, port list, port declaration,* and optional *parameters* must appear first in a module definition. *Port list* and *port declarations* are present only if the module has a ports to interact with the external environment. The block diagram of components in a Verilog module is as shown below.

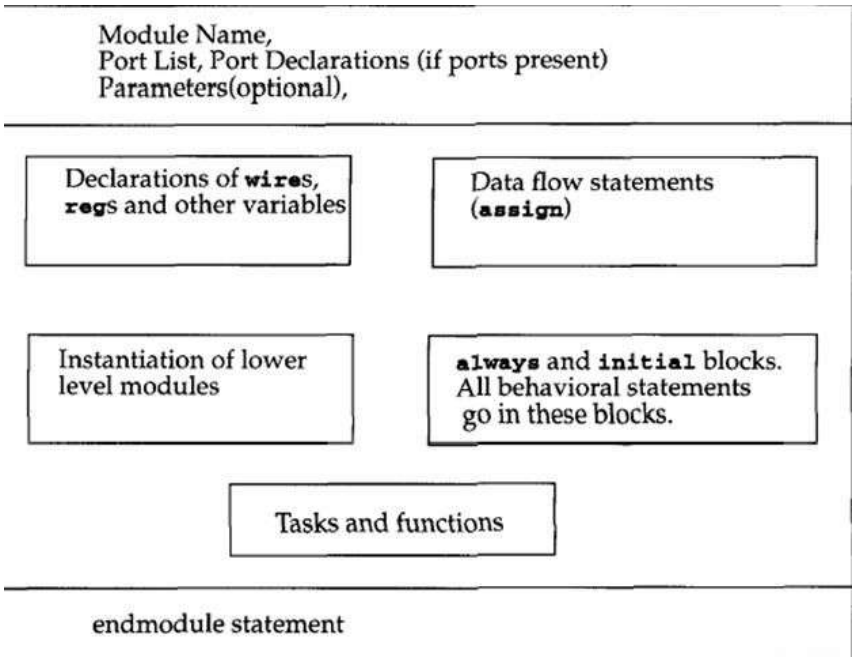

***The five components within a module are –**

1. variable declarations,
2. dataflow statements,
3. instantiation of lower modules,
4. behavioral blocks and
5. Tasks or functions.

These components can be in any order and at any place in the module definition. The **endmodule** statement must always come last in a module definition. All components except module, *module name* and endmodule are optional and can be mixed and matched as per design needs. Verilog allows multiple modules to be defined in a single file. The modules can be defined in any order in the file.

Example:

Consider the S R latch as shown below.

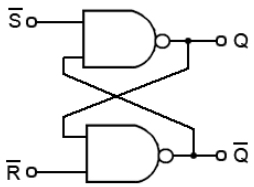

The *SR latch* has *S* and *R* as the input ports and *Q* and *Qbar*as the output ports.
The *SR latch* and its stimulus can be modeled as shown in Example

```
// Module name and port list
// SR-latch module

module SR-latch (Q, Qbar, Sbar, Rbar) ;

//Port declarations
```

```
output Q, Qbar;

input Sbar, Rbar;

// Instantiate lower-level modules
nandnl (Q, Sbar, Qbar) ;

nand n2 ( Qbar, Rbar, Q) ;

// endmodule statement
endmodule
```

The S R latch stimulus can be modeled as shown

```
// Module name and port list(No ports are there)
// Stimulus module
module Top;
// Declarations of wire, req, and other variables
wire q, qbar;
reg set, reset;

// Instantiate lower-level modules
// In this case, instantiate SR-latch
// Feed inverted set and reset signals to the SR latch

SR-latch ml(q, qbar, -set, -reset);
// Behavioral block, initial

initial
begin
$monitor($time, " set = %b, reset= %b, q= %b\nU,set,reset,q);
set= 0; reset = 0;
#5 reset = 1;
#5 reset = 0;
#5 set = 1;
end

// endmodule statement
endmodule
```

[Notice the following characteristics about the modules defined above.

In the SR latch definition above , notice that all components described in Figure need not be present in a module. We do not find variable declarations, dataflow (assign) statements, or behavioral blocks (always or initial).

However, the stimulus block for the SR latch contains module name, wire, reg, and variable declarations, instantiation of lower level modules, behavioral block (initial), and endmodule statement but does not contain port list, port declarations, and data flow (assign) statements.

Thus, all parts except module, module name, and endmodule are optional and can be mixed and matched as per design needs.]

Ports:

Port is an essential component of the **Verilog** module. **Ports** are used to communicate for a module with the external world through input and output. Ports define the interface of a Verilog module to the outside world.

Example:

The input output pins of IC are its ports

List of Ports

A module definition contains an optional list of ports.

Example:

Consider a 4-bit full adder that is instantiated inside a top-level module Top. The diagram for the input/ output ports is shown in Figure.

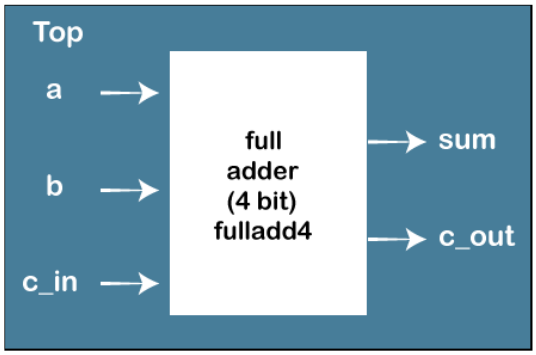

I/O Ports for Top and Full Adder

The **module fulladd4** takes input on ports **a, b, and c-in** and produces an output on ports **sum and c-out.** Thus, module fulladd4 performs an addition for its environment. The module Top is a top-level module in the simulation and does not need to pass signals to or receive signals from the environment. Thus, it does not have a list of ports.

The module names and port lists for both module declarations in Verilog are as shown below.

Example:

module fulladd4(sum, c-out, a, b, c-in); //module with a list ofports

module Top; // No list of ports, top-level module in simulation

Port Declaration

All ports in the list of ports must be declared in the module. Ports can be declared as follows:

Verilog Keyword	Type of Port
input	Input port
output	Output port

inout	Bidirectional port

Example:

Input list of ports/terminals ; Input s,r; Input[7:0] s,r;

Output list of ports/terminals ;Output y,z; Output [3:0] y,z

Inout list of ports/terminals ;Inout a,b;Inpit[15:0] a,b;

Example1 : 4 bit full adder

```
module fulladd4(sum, c-out, a, b, c-in);
//Begin port declarations section
output [3 : 0] sum;  // 4 bit full adder hence the vector [3: 0] which is 4 bit
output c-out;
input [3:0] a, b;
input c-in;
.....
//End port declarations section
Endmodule
```

All ports declarations are implicitly declared as **w i r e** in Verilog. Thus, if a port is intended to be a wire, it is sufficient to declare it as output, input, or inout.

However, if output ports hold their value, they must be declared as **reg.**

Example2 : D Flip- flop

```
module DFF(q, d, clk, reset) ;
output q;
reg q; // Output port q holds value; therefore it is declared as reg.
input d, clk, reset;
...
...
endmodule
```

All port declarations can be done in module declaration as shown below.

module full_add4**(output** reg[3:0] sum; **output** reg cout; **input** [3:0] a,b; **input** cin);

Port Connection Rules

A port consists of two units - one unit that is *internal* to the module and another that is *external* to the module

The block diagram of the rules that are governing port connections when modules are instantiated within other modules are summarized below.

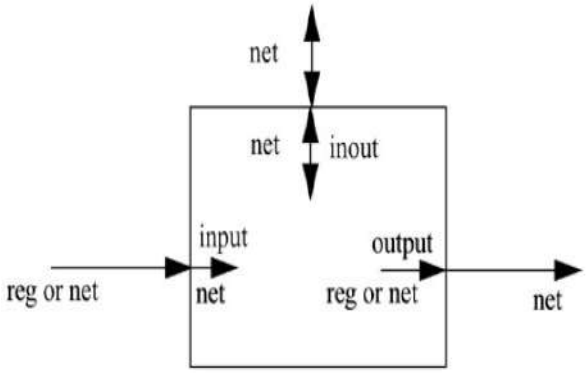

Inputs
Internally, input ports must always be of the type *net.* Externally, the inputs can be connected to a variable which is a **reg** or a ***net***.

Outputs
Internally, outputs ports can be of the type **reg or *net.*** Externally, outputs must always be connected to a ***net.***

Inouts

Internally, inout ports must always be of the **type *net.*** Externally, inout ports must always be connected to a ***net***.

Width matching

It is legal to connect internal and external items of different sizes when making inter-module port connections. A warning is issued when the widths do not match.

Unconnected ports

Verilog allows ports to remain unconnected. A port can remain unconnected by instantiating a module as shown below.

fulladd4 fa0 (SUM, , A, B, C-IN); // Output port c-out is unconnected.

Example of illegal port connection

```
module Top;
//Declare connection variables
reg [3:O]A,B;
reg C-IN;
reg [3:0] SUM; // this is the output. The output should be always net or wire.
                //Hence illegal
wire C-OUT;
```

Connecting Ports to External Signals

There are two methods of making connections between signals specified in the module instantiation and the ports in a module definition. They are

- Connecting by ordered **list**
- Connecting ports **by** name

Connecting by ordered list

In this method the signals to be connected must appear in the module instantiation in the same order as the ports in the port list in the module definition.

Example:

Consider 4 bit full adder with Top module. The Verilog code is

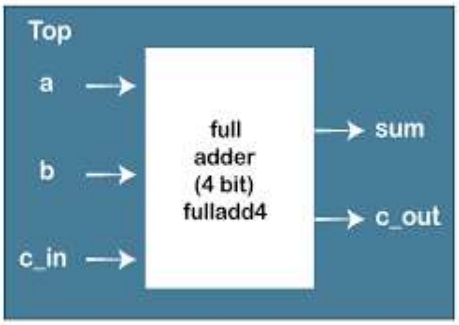

I/O Ports for Top and Full Adder

```
module fulladd4 (sum, c-out, a, b, c-in) ;
output [3 : 01 sum;
output c-out;
input [3:0] a, b;
input c-in;
...
<module internals>
…
```

```
module Top;
//Declare connection variables
reg [3:O]A,B;
reg C-IN;
wire [3:0] SUM;
wire C-OUT;

.....
<stimulus>
....
Endmodule
```

consider the module ***fulladd4*** To connect signals in module Top by ordered list, the external signals SUM, C-OUT, ***A,*** B, and *CJN* appear in exactly the same order as the ports sum, c-out, a, b, and c-in in module definition of ***fulladd4.***

Connecting ports by name

Verilog provides the capability to connect external signals to ports by the port names.

Example: consider Full – adder 4

```
module fulladd4 (sum, c-out, a, b, c-in) ;
output [3 : 01 sum;
output c-cout;
input [3:0] a, b;
input c-in;
...
<module internals>
...
```

```
endmodule

        module Top;
        //Declare connection variables
        reg [3:O]A,B;
        reg C-IN;
        wire [3:0] SUM;
        wire C-OUT;

        .....
        <stimulus>
        ....
        Endmodule
fulladd4  fa1 (.c-out(C-OUT), .sum(SUM), .b(B), .c-in(C-IN),  .a(A)  .);
```

Hierarchical Names

Every module instance, signal, or variable is defined with an identifier. Hierarchical name referencing allows to denote every identifier in the design hierarchy with a unique name. A hierarchical name is a list of identifiers separated by **dots (" ."). ** The advantages of mentioning the hierarchical name is any identifier can be addressed from any place in the design by simply specifying the complete hierarchical name of that identifier.

The top-level module is called the root module because it is not instantiate. To assign a unique name to an identifier, start from the top-level module and trace the path along the design hierarchy to the desired identifier anywhere.

Example:

Consider S R latch. The design hierarchy is shown in Figure

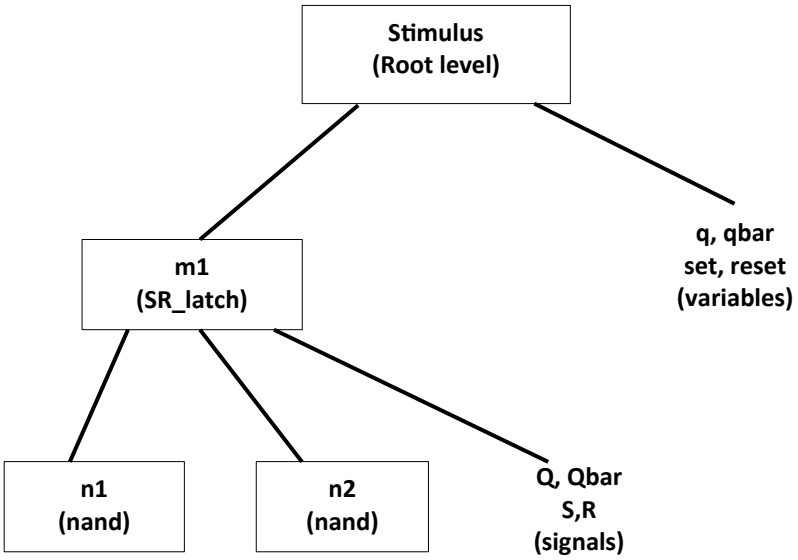

For this simulation, stimulus is the top-level module. Since the top-level module is not instantiated anywhere, it is called the root module. The identifiers defined in this module are q, qbar, set, and reset. The root module instantiates **ml**, which is a module of type SR-latch. The module **m1** instantiates nand gates nl and n2. Q, Qbar, S, and Rare port signals in instance ml. Hierarchical name referencing assigns a unique name to each identifier

.

Example:

stimulus
stimulus.qbar
stimulus.reset
stimulus.ml.Q
stimulus.ml.S
stimulus.nl
stimulus.q
stimulus.set
stimu1us.ml.Qbar
stimu1us.ml.R
stimulus.n2

Each identifier in the design is uniquely specified by its hierarchical path name

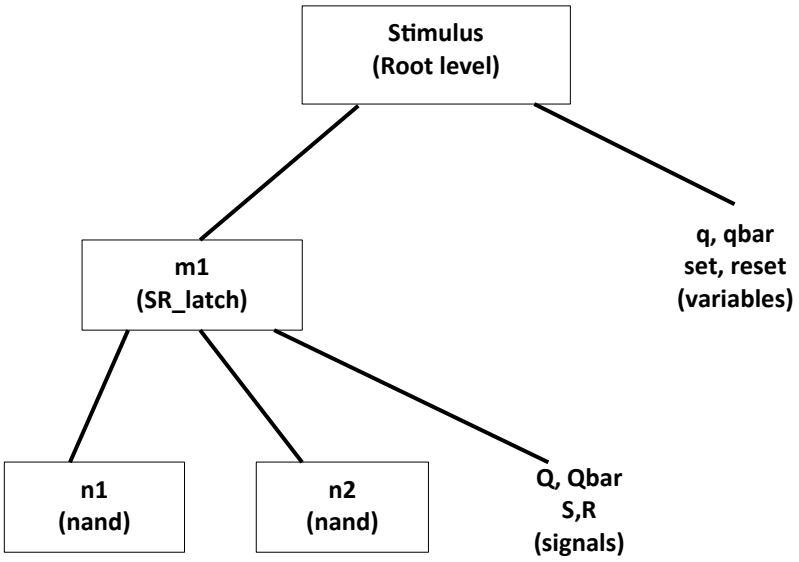

Behavioral Modeling

In behavioural modelling the digital design is carried out in terms of algorithm and its performance.

Structured Procedures

Structured procedures provide a means of modeling blocks of procedural statements. There are two structured procedure statements in Verilog: ***always*** **and** ***initial***

initial Statement

All statements inside an ***initial*** statement constitute an ***initial*** block. An ***initial*** block starts at time 0, executes exactly once during a simulation and then does not execute again. If there are multiple ***initial*** blocks, each block starts to execute concurrently at time 0. Each block finishes execution independently of other blocks

Example:

```
module stimulus;
reg x,y, a,b, m;
initial
m = l'b0  //single statement; does not need to be grouped
initial
begin
#5 c //multiple statements; need to be grouped
#25 b = l'b0;
end
initial
begin
 #l0 X = l'b0;
#25 y = l'bl;
end
initial
 #50 $finish;
endmodule
```

Time	Statement executed
0	m = l'b0 ;
5	a = l'b0 ;
10	x = l'b0
30	b = l'b0;
35	y = l'bl;
50	$finish;

always Statement

All behavioral statements inside an **always** statement constitute an **always** block. The **always** statement starts at time 0 and executes the statements in the **always** block continuously in a looping fashion. This statement is used to model a block of activity that is repeated continuously in a digital circuit

Example:

Consider a clock generator module that toggles the clock signal every half cycle

```
module clock-gen;
reg clock

//Initialize clock at time zero
initial
clock = l'b0;
//Toggle clock every half-cycle (time period = 20)
always
#l0 clock = ~clock;
initial
#l000 $finish;
endmodule
```

In the above Example the **always** statement starts at time 0 and executes the statement *clock = ~clock* every 10 time units. Notice that the initialization of *clock* has to be done inside a separate **initial** statement. Also, the simulation must be halted inside an **initial** statement. If there is no **$ stop** or **$finish** statement to halt the simulation, the clock generator will run forever.

Procedural Assignments

Procedural assignments update values of reg, integer, **real,** or time variables. The value placed on a variable will remain unchanged until another procedural assignment updates the variable with a different value. The syntax for the simplest form of procedural assignment is

<assignment> : : = < 1value> = <expression>

There are two types of procedural assignment statements: **blocking and nonblocking**.

Blocking assignments

Verilog supports blocking and non-blocking assignments statements within the always block with their different behaviours.

- ✓ Blocking assignment statements are executed in the order they are specified in a sequential block.
- ✓ A blocking assignment will not block execution of statements that follow in a parallel block.
- ✓ The ‘ = ‘ operator is used to specify the Blocking assignments .

Example:

```
reg x, y, z;
reg [15: 0] reg-a, reg-b;
integer count;
initial
begin
x=0; y=l; z = 1;          //Scalar assignments
count = 0;                //Assignment to integer variables
reg-a = 16'b0; reg-b = reg-a;          //initialize vectors
#l5 reg-a[2] = lrbl;              //Bit select assignment with delay
#l0 reg-b[15:13] = (x, y, z)          //Assign result of concatenation to  part select of a vector
count = count + 1;                    //Assignment to an integer (increment)
end
```

- ✓ In the above example the statement y = 1 is executed only after ***x*** = *0* is executed.
- ✓ The behaviour in a particular block is sequential in a begin-end block
- ✓ The statement count = count + 1 is executed last.

The simulation times at which the statements are executed are as follows:

- ✓ All statements ***x*** = *0* through reg-b = reg-a are executed at time 0
- ✓ Statement regal21 = *0* at time = 15
- ✓ Statement reg-b[15:13] = **{x,** y, *z)* at time = 25
- ✓ Since there is a delay of 15 and 10 in the preceding statements, count = count + 1 will be executed at time = 25 units

Nonblocking Assignments

Non-blocking assignment statements are allowed to be scheduled without blocking the execution of the following statements and is specified by a (<=) symbol.

Example:

```
reg x, y, z;
reg [15:0] reg-a, reg-b;
integer count;
//All behavioral statements must be inside an initial or always block

initial
begin
x= 0; y = 1; z = 1; //Scalar assignments
count = 0; //Assignment to integer variables
reg-a = 16'b0;  reg-b = reg-a;  //Initialize vectors
```

reg-a[2] <= #l5 l'bl; //Bit select assignment with delay

reg-b[15: 13] <= #l0 **{x,** y, z***);*** //Assign result of concatenation

//to part select of a vector

count <= count + 1; //Assignment to an integer (increment)

end

The statements **x** = 0 through reg-b = reg-a are executed sequentially at time 0.

The three nonblocking assignments are processed at the same simulation time.

1. **reg-a[2] = 0** is scheduled to execute after 15 units (i.e., time = 15)
2. **reg-b[15:13]**= **{x**, y, z} is scheduled to execute after 10 time units (i.e., time = 10)
3. **count = count + 1** is scheduled to be executed without any delay (i.e., time = 0)

Application of nonblocking assignments

They are used as a method to model several concurrent data transfers that take place after a common event.

Consider the following example where three concurrent data transfers take place at the positive edge of clock.

Example:

always @(posedge clock)

begin

regl <= **#l** i n l ;

reg2 <= @(negedge clock) in2 **A** in3;

reg3 <= #l regl; //The old value of regl

end

At each positive edge of clock, the following sequence takes place for the nonblocking assignments.

1. A read operation is performed on each right-hand-side variable, inl, in2, in3 and regl, at the positive edge of clock. The right-hand-side expressions are evaluated, and the results are stored internally in the simulator.

2. The write operations to the left-hand-side variables are scheduled to be executed at the time specified by the intra-assignment delay in each assignment, that is, schedule "write" to reg l after 1 time unit, to reg2 at the next negative edge of clock, and to reg3 after 1 time unit.

3. The write operations are executed at the scheduled time steps. The order in which the write operations are executed is not important because the internally stored right-hand-side expression values are used to assign to the left-hand-side values. For example, note that reg3 is assigned the old value

Thus, the final values of regl, reg2, and reg3 are not dependent on the order in which the assignments are processed.

To understand the read and write operations further, consider the following example, which is intended to swap the values of registers a and b at each positive edge of clock, using two concurrent **always** blocks

Example:

//Illustration 1: Two concurrent *always* blocks with blocking statements

```
always @(posedge clock)
a = b;
always @(posedge clock)
b = a;
```

//Illustration 2: Two concurrent *always* blocks with nonblocking statements

```
always @(posedge clock)
a <= b;
always @(posedge clock)
b <= a;
```

In the above example, in *illustration* 1, there is a race condition when blocking statements are used. Either *a* = b would be executed before b = *a,* or vice versa, depending on the simulator implementation. Thus, values of registers *a* and b will not be swapped. Instead, both registers will get the same value (previous value of *a* or *b),* based on the Verilog simulator implementation.

However, nonblocking statements used in *illustration* 2 eliminate the race condition. At the positive edge of clock, the values of all right-hand-side variables are *"read,"* and the right-hand-side expressions are evaluated and stored in *temporary* variables. During the write operation, the values stored in the temporary variables are assigned to the left-hand-side variables. Separating the read and write operations ensures that the values of registers *a* and b are swapped correctly, regardless of the order in which the write operations are performed.

Conditional Statements:

Conditional statements are used for making decisions based upon certain conditions. These conditions are used to decide whether or not a statement should be executed. Keywords i f and **else** are used for conditional statements.

There are three types of conditional statements.

1. if statement
2. if – else statement
3. if-else- if statement.

1. In if statement - `Statement executes or does not execute.`

Syntax:

if (<expression>) true-statement ;

Example:

If (!lock) buffer = data;
If (enab1e) out = in;

2. **In if – else statement** -either true-statement or false-statement is evaluated
   Syntax :

   if (<expression>) true-statement ; else false-statement ;

Example:

```
if (reset)
begin
   dff <= 0;
 end
else
 begin
 dff <= din;
 end
```

3. **In if-else- if statement** - `Choice of multiple statements. Only one is executed.`

   Syntax:

   if (<expressionl>) true-statement1 ;

   else if (<expression2>) true-statement2 ;

   else if (cexpression3>) true-statement3 ;

   else default-statement ;

Example:

```
if (alu-control = = 0)
l y=x + z;
else if(a1u-control = = 1)
y=x - z;
else if (a1u-control = = 2)
y=x*z;
else
   $display ("Invalid ALU control signal");
```

Multiway Branching

The nested **if-else-if** can become unwieldy if there are too many alternatives. **A** shortcut to achieve the same result is to use the **case** statement.

The keywords **case, endcase,** and **default** are used in the *case* statement

Syntax:

case (expression)
alternativel: statement l;
alternative2: statement 2;
alternative3: statement 3;
...
...
Default: default-statement;
endcase

1. Each of *statement 1, statement2 ...*, *default-statement* can be a single statement or a block of multiple statements.
2. The expression is compared to the alternatives in the order they are written.
3. For the first alternative that matches, the corresponding statement or block is executed.
4. If none of the alternatives match, the *default-statement* is executed.

Example:

```
reg [1:0] alu-control;
...
...
case (alu-control)
2'd0 : y = x + z;
2'dl : y = x - z;
2'd2 : y = x* z;
default : $display("Inva1id ALU control signal");
endcase
```

4 : 1 Multiplexer

```
module mux4-to-l (out, i0, il, i2, i3, sl, s0);
output out;
input i0, il, i2, i3;
input sl, S0;
reg out;
always @(sl or S0 or i0 or il or i2 or i3)
case ({sl, s0))
2'd0 : out = i0;
2'dl : out = il;
2'd2 : out = i2;
2'd3 : out = i3;
default: $display("Invalid control signals");
endcase
endmodule
```

1 : 4 Demultiplexer

```
module demultiplexerl-to-4 (out0, outl, out2, out3, in, sl, s0);
output out0, outl, out2, out3;
reg out0, outl, out2, out3;
input in;
input sl, s0;
```

```
ilways @(sl or s0 or in)
case ({sl, s0))
2 'b00 :
begin: out0 = in; outl = l'bz; out2 = l'bz; out3 = l'bz; end
2'b0l : begin out0 = l'bz; outl = in; out2 = l'bz; out3 = l'bz; end
2'bl0 : begin out0 = l'bz; outl = l'bz; out2 = in; out3 = l'bz; end
2'bll : begin out0 = l'bz; outl = l'bz; out2 = l'bz; out3 = in; end
2'bx0, 2'bxl, 2'bxz, 2'bxx, 2'bOx, 2'blx, 2'bzx :
begin
out0 = l'bx; outl = l'bx; out2 = l'bx; out3 = l'bx;
end
2'bz0, 2'bzl, 2'bzz, 2'bOz, 2'blz :
begin
ou0 = l'bz; outl = l'bz; out2 = l'bz; out3 = l'bz;
end
default: $display("Unspecified control signals");
end case
endmodule
```

Account for unknown signals on select.

- If any select signal is then outputs are x.
- If any select signal is z, outputs are z.
- If one is x and the other is z, x gets higher priority.

casex, casez Keywords

There are two variations of the **case** statement. They are denoted by keywords, **casex** and **casez.**

casez treats all **z** values in the case alternatives or the case expression as don't cares. All bit positions with **z** can also represented by ? in that position.

casex treats all **x** and ***z*** values in the case item or the case expression as don't cares.

The use of **casex** and **casez** allows comparison of only non-X or **-z** positions in the case expression and the case alternatives.

Example:

```
reg [3 : 0] encoding;
integer state;
casex (encoding) //logic value X represents a don't care bit
4'blxxx : next-state = 3;
4'bxlxx : next-state = 2;
4'bxxlx : next-state = 1;
```

```
4'bxxxl : next-state = 0;
default : next-state = 0;
endcase
```

Thus, an input encoding = 4'bl0xz would cause next-state = **3** to be executed.

Loops

There are four types of looping statements

- while
- for
- repeat and
- Forever

While Loop

The keyword **while** is used to specify this loop. The ***while*** loop executes until the ***while-expression*** **becomes false.** If multiple statements are to be executed in the loop, they must be grouped typically using keywords **begin** and **end.**

Example:

Example 1: Increment count from 0 to 127. Exit at count 128.

```
integer count;
initial
        begin
        count = 0;
        while (count < 128)    //Execute loop till count is 127. Exit at count 128
                begin
                $display ( "Count = %d" , count) ;
                count = count + 1;
                end
        end
```

Example 2: Find the first bit with a value 1 in flag

```
'define TRUE l'bl';
'define FALSE l'b0;
reg [15:0] flag;
integer i                    //integer to keep count
reg continue;
initial
        begin
        flag = 16'b 0010~0000~0000~0000;
        i = 0;
        continue = 'TRUE;
```

```
        while((i < 16) && continue ) //Multiple conditions using operators.
begin
if ( flag [i] )
        begin
        $display("Encountered a TRUE bit at element number %d", i);
        continue = 'FALSE;
        end
i=i+l;
end
end
```

For Loop

The keyword **for** is used to specify this loop. The **for** loop contains three parts:

- An initial condition
- A check to see if the terminating condition is true
- A procedural assignment to change value of the control variable

Example:

```
integer count;
initial
        for ( count=O; count < 128; count = count + 1)
                $display("Count = %do, count);
```

for loops can also be used to initialize an array or memory.

Example:

```
'define MAX-STATES 32
integer state [O: 'MAX-STATES-l];          //Integer array state with elements 0: 31
integer i;
initial
begin
for( i = 0;  i < 32;  i = i + 2)           //initialize all even locations with 0
state[il = 0;
for( i = 1;  i < 32;  i = i + 2)           //initialize all odd locations with 1
state [ i l = 1;
end
```

Repeat Loop

The keyword **repeat** is used for this loop. The **repeat** construct executes the loop a fixed number of times. A **repeat** construct cannot be used to loop on a general logical expression. A **repeat** construct must contain a number, which can be a constant, a variable or a signal value.

Example:

//Example1 : incrernent and display count from 0 to 127

```
integer count;
initial
        begin
        count = 0;
        repeat (128)
begin
$display("Count = %d", count);
count = count + 1;
end
        end
```

//Example 2 : Data buffer module

```
        //After it receives a data-start signal. Reads data for next 8 cycles.
parameter cycles = 8;
input data-start;
input [15:01 data;
input clock;
reg [15:0] buffer [0:7];
integer i;
always @(posedge clock)
begin
if(data-start)              //data start signal is true
begin
i = 0;
repeat(cyc1es)          //Store data at the posedge of next 8 clock cycles
begin
@(posedge clock) buffer[ i ] = data;   //waits till next  posedge to latch data
i=i+l;
end
end
end
endmodule
```

Forever loop

The keyword **forever** is used to express this loop. The loop does not contain any expression and executes forever until the **$finish** task is encountered. The loop is equivalent to a **while** loop with an expression that always evaluates to true, A forever loop can be exited by use of the **disable** statement.

//Example 1: Clock generation

```
//Use forever loop instead of always block
reg clock;
initial
begin
clock = l'bO;
forever #l0 clock = -clock;                    //Clock with period of 20 unit
end
```

//Example 2: **Synchronize two register values at every positive edge of clock**

```
reg clock;
reg x y;
initial
forever @(posedge clock) x = y;
```

Dataflow Modeling

Dataflow modeling describes hardware in terms of the flow of data from input to output.

Continuous Assignment

The continuous assignment statement is the main construct of dataflow modeling and is used to assign value to the net. It starts with the keyword **assign**.

General syntax is:

<continuous-assign> : : = assign <drive-strength>?<delay>? <list-of-assignments>;

Continuous assignments have the following characteristics.

- Continuous assignments are always active. That is the LHS net value changes as soon as the value of any operand in the RHS changes.
- The LHS of an assignment should be either scalar or vector nets or a concatenation of both. Registers are not applicable on the LHS.
- The RHS of the assignment can be register, net, or function calls of scalar or vector type.
- Delays can be specified.

Examples of Continuous Assignment

1. // Continuous assign. out is a net. **il** and **i2** are nets

   assign out = il & i2;

2. // Continuous assign for vector nets. *addr* is a 16-bit vector net

   assign addr[l5:0] = addrl_bits[l5:0] ^ addr2_bits[l5:0];

3. // Concatenation. Left-hand side is a concatenation of a scalar

   assign {c-out, sum[3:0]) = a[3:0] + b[3:01 + c-in;

Implicit Continuous Assignment

Instead of declaring a net and then writing a continuous assignment on the net, a continuous assignment can be placed on a net when it is declared.

Example:

//Regular continuous assignment

wire out;

assign out = in1 & in2;

//Same effect is achieved by an implicit continuous assignment

wire out = in1 & in2;

Delays

Three ways of specifying delays in continuous assignment statements are

1. Regular assignment delay,
2. implicit continuous assignment delay, and
3. net declaration delay.

Regular Assignment Delay

A delay value in the continuous assignment statement is assigned first. The delay value is specified after the keyword **assign.**

Example:

assign #10 out = in1 & in2; // Delay in a continuous assign

- Any change in values of *in1* or *in2* will result in a delay of 10 time units before recomputation of the expression *in1* & *in2,* and the result will be assigned to *out.*
- If *in1* or *in2* changes value again before 10 time units when the result propagates to *out,* the values of *in1* and *in2* at the time of recomputation are considered.

This property is called **inertial delay.** An input pulse that is shorter than the delay of the assignment statement does not propagate to the output.

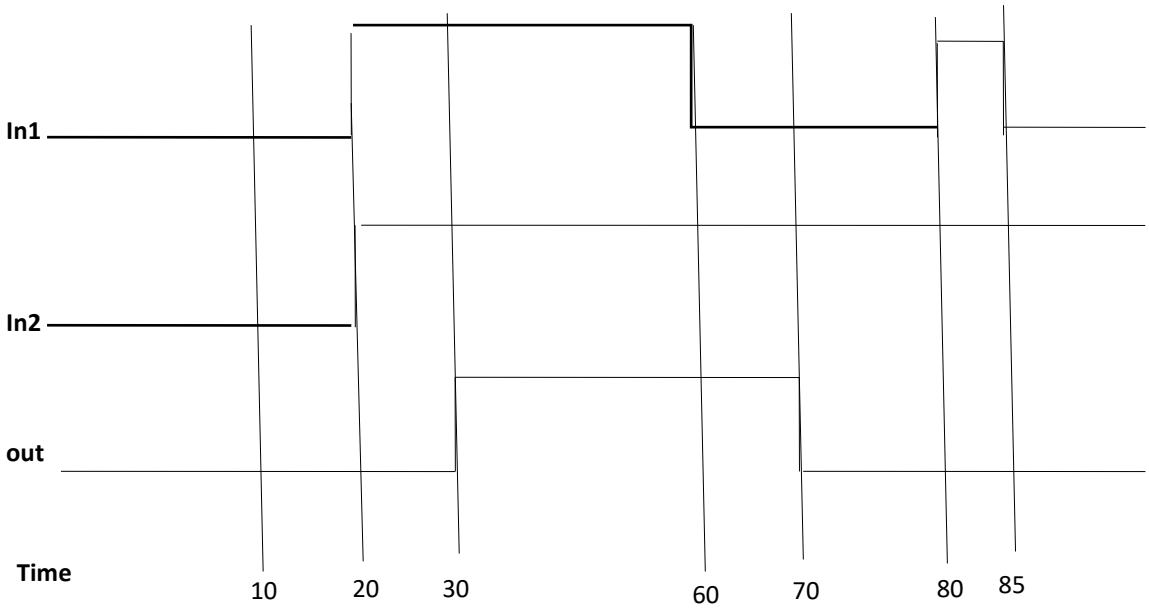

Implicit Continuous Assignment Delay

An equivalent method is to use an implicit continuous assignment to specify both a delay and an assignment on the net.

Example:

wire #l0 out = in1 & in2;

//same as
wire out;
assign #l0 out = in1 & in2;

Expressions, Operators, and Operands:

Expressions:

Expressions are constructs that combine operators and operands to produce a result.

Examples:

- a&b

- addr1[20:17] + addr2[20:17]
- in1 | in2

Operands:

Operands can be any one of the data types. They can be *constants, integers, real numbers, nets, registers, times, bit-select etc.,*

Example:

1. integer count, final-count;
   final-count = count + 1
2. real a, b, c;
   c = a - b; etc.,

Operators

Verilog has Ten different types of operators. They are

1. Arithmetic
2. Logical
3. Relational
4. Equality
5. Bitwise logical
6. Reduction
7. Shift operators
8. Concatenation
9. Replication
10. Conditional

1. Arithmetic Operators

There are two types of arithmetic operators:

- binary and
- Unary.

Binary arithmetic operators are

1. Multiply (*),
2. divide (/),
3. add (+),
4. subtract (-) and
5. modulus (%).

Example:

```
If A = 4'b0011; B = 4'b0100; D = 6; E = 4; determine
```

a) `A * B` (Ans: 4'b1100)
b) `D / E` (Ans: Evaluates to 1)
c) `A + B` (Ans: 4'b0111)
d) `B - A` (Ans: 4'b0001S

If any operand bit has a value **x,** then the result of the entire expression is **x.**

Example:

in1 = 4'b10lx;
in2 = 4'b10l0;
sum = in1 + in2; // sum will be evaluated to the value 4'bx

Modulus operators produce the *remainder* from the division of two numbers.

Example:

13 % 3 // Evaluates to 1
16 % 4 // Evaluates to 0

-7 % 2 **// Evaluates to -1, takes sign of the first operand**
7 % -2 // Evaluates to +l, takes sign of the first operand

Unary operators
The operators + and - can also work as *unary* operators. They are used to specify the positive or negative sign of the operand

Example:

-4 // Negative 4

+5 // Positive 5

2. **Logical Operators**

Logical operators are ***logical-and (&&), logical-or*** **(| |) and** ***logical-not*** **(!).** Operators ***&&*** **and** | | are binary operators. Operator **!** is a unary operator.

Logical operators follow the following conditions –

- Logical operators always evaluate to a l-bit value, 0 (false), **1** (true), or ***X***
- If an operand is not equal to zero, it is equivalent to a logical **1** (true condition). If it is equal to zero, it is equivalent to a logical **0** (false condition). If any operand bit is **X** or **z,** it is equivalent to **X** (ambiguous condition).

Example:

I. A = 4'b0011; B = 4'b0000;
   a) A && B // Evaluates to 0.
   b) A || B // Evaluates to 1.
   c) ! A / / Evaluates to 0.
   d) !B// Evaluates to 1

II. A = 2'b0x; B = 2'bl0;
   A && B // Evaluates to X.

III. (a = = 2) && (b = = 3) // Evaluates to 1 if both a = = 2 and b = = **3** are true.
   // Evaluates to 0 if either is false.

3. **Relational Operators**

Relational operators are -

- greater-than **(>)**,
- less-than **(<)**
- greater-than-or-equal-to **(>=)** and
- less-than-or-equal-to **(<=)**

Example:

If A=4, B=3

X = 4'b1010, Y = 4'b1101, Z = 4'blxxx then evaluate

a) A <= B // Evaluates to a logical 0

b) A > B // Evaluates to a logical 1

c) Y >= X // Evaluates to a logical 1

d) Y < Z // Evaluates to an X

4. Equality Operators

Equality operators are *logical equality* (==), *logical inequality* (!= =),*case equality* (===), and *case inequality* (!= =) When used in an expression, equality operators return logical value **1** if true, **0** if false. These operators compare the two operands bit by bit, with zero filling if the operands are of unequal length.

Expression	Description	Possible Logical Value
a == b	a equal to b, result unknown if **X** or **z** in a or b	**0, 1, X**
a ! = b	a not equal to b, result unknown if **X** or **z** in a or b	**0, 1, X**
a = = = b	a equal to b, including **X** and **z**	**0, 1**
a!== b	a not equal to b, including **X** and **z**	**0, 1**

Problems:

A = 4 , B = 3

X = 4'b1010 ; Y = 4'b1011;

Z = 4'b1xxz ; M = 4'b1xxz ; N = 4'b1xxx;

A == **B** // **Results in logical** 0

X != **Y** // **Results in logical** 1

X == **Z** // **Results in X**

Z === **M //~esults in logical l (all bits match, including X and** z)

z === N **//~esults in logical** 0 **(least significant bit does not match)**

M !== **N** // **Results in logical** 1

5. Bitwise Operators

Bitwise operators are

- ***negation* (~),**
- ***and(&),***
- ***or* (|)**
- **xor *(^)***
- ***xnor (^ ~ , ~^)).***

Bitwise operators perform a bit-by-bit operation on two operands. They take each bit in one operand and perform the operation with the corresponding bit in the other operand. If one operand is shorter than the other, it will be bit extended with zeros to match the length of the longer operand.

Example:

X = 4' b1010; Y = 4' b1101; Z = 4' b10x1;

~X // Negation. Result is 4'b0l0l
X & Y // Bitwise and. Result is 4'bl000
X | Y // Bitwise or. Result is 4'bllll
X ^ Y // Bitwise xor. Result is 4'b0lll
X ^~ Y // Bitwise xnor. Result is 4'bl000
X & Z // Result is 4'bl0x0

6. Reduction Operators

Reduction operators are

and (&),
nand(~ &),
***or* (|),**
***nor* (~ |),**
***xor (^),* and**
xnor (~ ^).

Reduction operators take only one operand. Reduction operators perform a bitwise operation on a single vector operand and yield a l-bit result.

Example:

X = 4' b1010

&X //Equivalent to 1 & **0** & **1** & **0. Results in l'b0**

|X //equivalent to 1 | 0 | **1 | 0. Results in l'bl**

^ X //Equivalent to 1 ^ 0 A 1 ^ 0. Results in l'b0

7. Shift Operators

Shift operators are

- *right shift* (>>) and
- *left shift* (<<).

These operators shift a vector operand to the right or the left by a specified number of bits

Example:
X = 4'b 1100

Y = X >> l; //Y is 4'b0ll0.Shift right 1 bit.0 is filled in MSB position

Y = X << 1; //Y is 4'bl000.Shift left 1 bit.0 filled in LSB position.

Y = X << 2; //Y is 4'b0000.Shift left 2 bits.

8. Concatenation Operator

The *concatenation* operator ({,) provides a mechanism to append multiple operands. The operands must be sized. Concatenations are expressed as operands within braces, with commas separating the operands.

Example:

If A = l'bl, B = 2'b00, C = 2'b10, D = 3'bll0

Then what is

Y = {B , C} // Result Y is 4'b00l0

Y = {A , B , C , D , 3'b00l) // Result Y is 11'b10010110001

Y = {A , B[0], C[1] 1} // Result Y is 3'bl0l

9. Replication Operator

Repetitive concatenation of the same number can be expressed by using a replication constant. A replication constant specifies how many times to replicate the number inside the brackets (**{ }**).

Example:

Let reg A;

reg [1:0] B, C;

reg [2:0] D;

A = l'bl; B = 2'b00; C = 2'bl0; D = 3'bll0;

Y = { 4{A) } // Result Y is 4'bllll

Y = { 4{A} , 2{B} } // Result Y is 8'b11110000

Y = { 4{A} , 2{B} , C } // Result Y is 10'b1111000010

10. Conditional Operator

The conditional operator(? :) takes three operands.

Usage: condition-expr ? true-expr : false-expr ;

The condition expression (condition-expr) is first evaluated.

- If the result is true (logical **1),**then the true-expr is evaluated.
- If the result is false (logical **0),** then the false-expr is evaluated.
- If the result is **X** (ambiguous), then both true-expr and false-expr are evaluated and their results are compared, bit by bit, to return for each bit position an **X** if the bits are different and the value of the bits if they are the same

Conditional operations can be nested. Each *true-expr* or *false-expr* can itself be a conditional operation.

Example:

Consider 4 – to – 1 multiplexer.

Let ***(A==3)*** and control are the two select signals of 4-to-1 multiplexer with n, m, y, *x* as the inputs and out as the output signal.

Then assign out = (A == 3) ? (**control** ? **x** : **y**): (**control** ? **m** : **n)** ;

Example:

Write the Verilog code for 4-to-1 Multiplexer, Using Conditional Operators

module multiplexer4-to-l (out, i0, il, i2, i3, sl, s0);

output out;

input i0, il, i2, i3;

input sl, s0;

assign out = sl ? (S0 ? i3 : i2) : (SO ? il : i0);

endmodule ;

11. <u>Precedence of operators :</u>

Operators Precedence

If no parentheses are used to separate operands then Verilog uses the following rules of precedence: (good practice: use parentheses)

Operators	Operators Symbols	
Unary	+ - ! ~	Highest Precedence
Multiply, Divide, Modulus	* / %	
Add, Subtract	+ -	
Shift	<< >> >>>	
Relational	< <= > >=	
Equality	== != === !==	
Reduction	&, ~&, ^, ^~, |, ~|	
Logical	&&	
Conditional	?:	Lowest Precedence

12

<u>Summary of operators in Verilog:</u>

Type of operation	Operator symbol	Description	Number of operands
Arithmetic	+	addition	2
	-	subtraction	2
	*	multiplication	2
	/	division	2
	%	modulus	2
	**	exponentiation	2
Shift	>>	logical right shift	2
	<<	logical left shift	2
	>>>	arithmetic right shift	2
	<<<	logical left shift	2
Relational	>	greater than	2
	<	less than	2
	>=	greater than or equal to	2
	<=	less than or equal to	2
Equality	==	equality	2
	!=	inequality	2
	===	case equality	2
	!==	case inequality	2
Bitwise	~	bitwise negation	1
	&	bitwise and	2
	|	bitwise or	2
	^	bitwise xor	2
Reduction	&	reduction and	1
	|	reduction or	1
	^	reduction xor	1
Logical	!	logical negation	1
	&&	logical and	2
	||	logical or	2
Concatenation	{ }	concatenation	any
	{ { } }	replication	any
Conditional	? :	conditional	3

Examples:

Write Verilog code for 4-to-1 Multiplexer using data flow modelling

Method 1: using logic equation

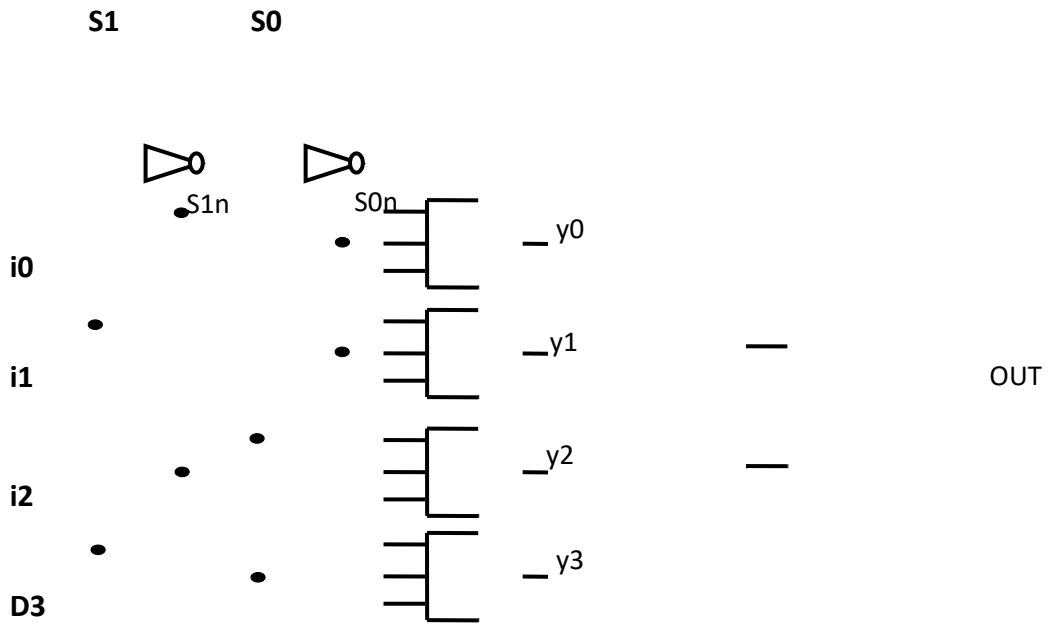


```
module mux4-to-l (out, i0, il, i2, i3, sl, s0);
output out;
input i0, il, i2, i3;
input sl, s0;

assign out = (~sl  & ~s0 & i0) | (~sl  &  s0 & il) | (sl  & ~s0 & i2) | (sl & s0 & i3) ;
endmodule.
```

Method 2: Using Conditional Operators

```
module multiplexer4-to-l (out, i0, il, i2, i3, sl, s0);
output out;
input i0, il, i2, i3;
input sl, s0;
assign out = sl ? ( S0 ? i3 : i2) : (SO ? il : i0);
endmodule
```

Write Verilog code for 4 Bit Full Adder using data flow modelling

Method 1: Using Dataflow Operators

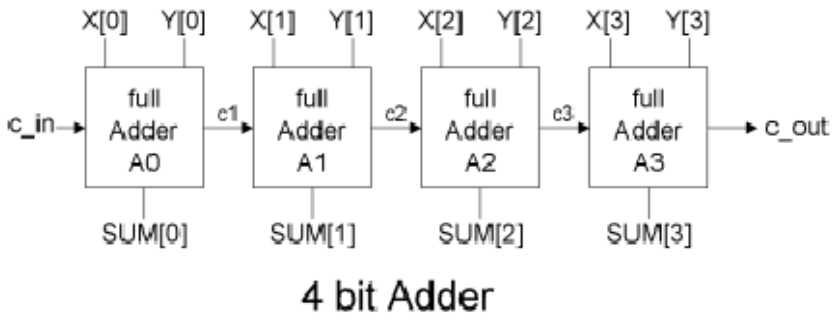

module fulladd4 (sum, c-out, x, y, c-in);

output [3:0] sum;

output c-out;

input [3: 0] x, y;

input c-in;

assign {c-out, sum) = x + y + c-in;

endmodule

Method 2: full adder with carry look ahead

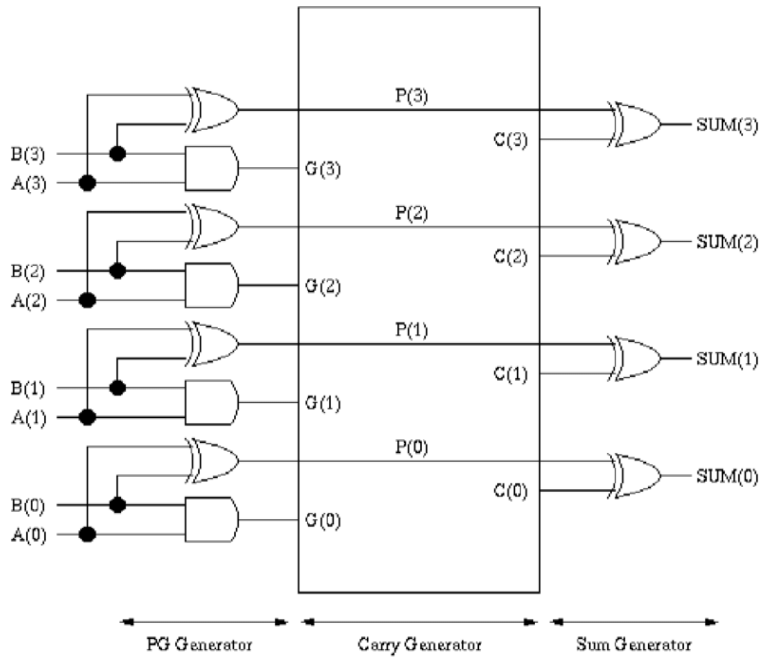

4-bit CARRY LOOK-AHEAD ADDER

$P_0 = A_0 \oplus B_0$ $\quad G_0 = A_0 B_0$

$P_1 = A_1 \oplus B_1$ $\quad G_1 = A_1 B_1$

$P_2 = A_2 \oplus B_2$ $\quad G_2 = A_2 B_2$

$P_3 = A_3 \oplus B_3$ $\quad G_3 = A_3 B_3$

$S_0 = P_0 \oplus C_0$

$S_1 = P_1 \oplus C_1$ $\quad C_0 = \text{o/p carry}$

$S_2 = P_2 \oplus C_2$

$S_3 = P_3 \oplus C_3$

$C_1 = P_0 C_0 + G_0$

$C_2 = P_1 C_1 + G_1 = P_1(P_0 C_0 + G_0) + G_1$

$C_3 = P_2 C_2 + G_2 = P_2(G_1 + P_1 G_0 + P_1 P_0 C_0) + G_2$

$C_4 = P_3 C_3 + G_3$

$= P_3(G_2 + P_2 G_1 + P_2 P_1 G_0 + P_3 P_2 P_1 P_0 C_0) + G_3$

module fulladd4(sum, c-out, a, b, c-in);

output [3:0] sum;

```
output c-out;
input [3:0] a,b;
input c-in;

wire p0,g0, pl, g1, , p2, g2, , p3, g3;
wire c4, c3, c2, c1;
assign          p0 = a[0] ^ b[0],
                p1= a[1] ^ b[1],
                p2 = a[2] ^ b[2],
                p3= a[3] ^ b[3];

assign   g0 = a[0] & b[0],
         g1 = a[l] & b[1],
         g2 = a[2] & b[2],
         g3 = a[3] & b[3];

assign          c1 = g0 | (p0 & c-in);
                c2 = g1 | (p1 & g0) | (p1 & p0 & c-in);
                c3 = g2 | (p2 & g1) | (p2 & p0 & c-in) | (p2 & p1 & p0 & c-in);
                c4 = g3 | (p3 & g2) | (p3 & p2 & g1) | (p3 & p2 & p0 & c-in) | (p3 & p2 & p1  &
                     p0 & c-in);

assign          sum[0] = p0 ^ c-in;
                sum[1] = p1 ^ c1;
                sum[2] = p2 ^ c2;
                sum[3] = p3 ^ c3;

assign c-out = c4;
endmodule
```

UNIT 2:

Gate-Level Modelling

In gate level modelling the circuit is described in terms of gates (e.g., and, nand).

Gate Types

A logic circuit can be designed by use of logic gates. In Verilog the basic logic gates are defined as **predefined primitives**. There are two types of basic gates:

- ***And / or* gates and**
- ***Buf / not* gates.**

And / Or Gates

And /or gates have *one* scalar output and *multiple* scalar inputs. The first terminal in the list of gate terminals is an output and the other terminals are inputs. The output of a gate is evaluated as soon as one of the inputs changes. The inbuilt gate primitives are

and	**nand**	**xnor**
or	**nor**	
not	**xor**	

The logic symbol and truth table of these gates are as shown below:

and gate:

		I2			
	and	**0**	**1**	**x**	**z**
I1	**0**	**0**	**0**	**0**	**0**
	1	**0**	**1**	**x**	**x**
	x	**0**	**x**	**x**	**x**
	z	**0**	**x**	**x**	**x**

nand gate

		I2			
	nand	**0**	**1**	**x**	**z**
I1	**0**	**1**	**1**	**1**	**1**
	1	**1**	**0**	**x**	**x**
	x	**1**	**x**	**x**	**x**
	z	**1**	**x**	**x**	**x**

or gate

		I2			
	or	**0**	**1**	**x**	**z**
I1	0	0	1	x	x
	1	1	1	1	1
	x	x	1	x	x
	z	x	1	x	x

nor gate

		I2			
	nor	0	1	x	z
I1	0	1	0	x	x
	1	0	0	0	0
	x	x	0	x	x
	z	x	0	x	x

xor gate

	I2				
	xor	**0**	**1**	**x**	**z**
	0	**0**	**1**	**x**	**x**
I1	**1**	**1**	**0**	**x**	**x**
	x	**x**	**x**	**x**	**x**
	z	**x**	**x**	**x**	**x**

xnor gate

	I2				
	xnor	0	1	x	z
	0	1	0	x	x
I1	1	0	1	x	x
	x	x	x	x	x
	z	x	x	x	x

These gates are instantiated to build logic circuits in Verilog. Examples of gate instantiations are shown below. In this example, for all instances, *OUT* is connected to the output out, and *IN1* and IN2 are connected to the two inputs `il` and i2 of the gate primitives.

wire OUT, IN1, IN2;

// basic gate instantiations.

and al (OUT, IN1, IN2);

nand nal (OUT, IN1, IN2) ;

or orl (OUT, IN1, IN2);

nor nor1 (OUT, IN1, IN2) ;

xor xl (OUT, IN1, IN2) ;

xnor nxl (OUT, IN1, IN2) ;

The instance name does not need to be specified for primitives

.

Example:

and (OUT, IN1, IN2); // legal gate instantiation

Buf / Not Gates

Buf / not gates have one scalar input and one or more scalar outputs. The last terminal in the port list is connected to the input. Other terminals are connected to the outputs.

Two basic *buf / not* gate primitives are –

- buf
- not

The symbols and truth tables are as shown below

buf	in	out
	0	0
	1	1
	x	x
	z	z

not	in	out
	0	1
	1	0
	x	x
	z	x

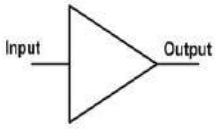

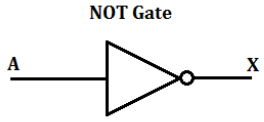

<u>bufif / notif</u>

Gates with an additional control signal on **buf** and **not** gates are also available. The primitives are

Bufif 1	**notif 1**
bufif0	**notif0**

These gates propagate only if their control signal is asserted. They propagate **z** if their control signal is deasserted. Symbols for ***bufif / notif*** are shown below

Figure 5-3. Gates Bufif and Notif

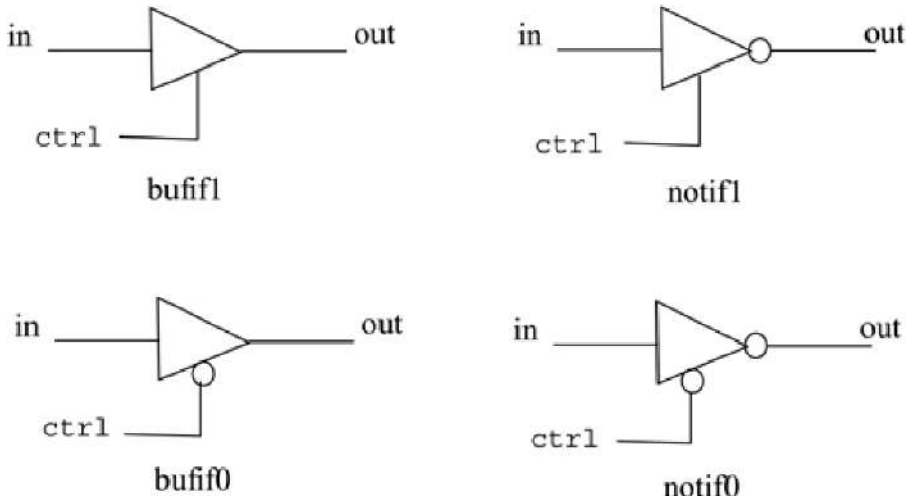

bufif1		ctrl 0	1	x	z
in	0	z	0	L	L
	1	z	1	H	H
	x	z	x	x	x
	z	z	x	x	x

bufif0		ctrl 0	1	x	z
in	0	0	z	L	L
	1	1	z	H	H
	x	x	z	x	x
	z	x	z	x	x

notif1		ctrl 0	1	x	z
in	0	z	1	H	H
	1	z	0	L	L
	x	z	x	x	x
	z	z	x	x	x

notif0		ctrl 0	1	x	z
in	0	1	z	H	H
	1	0	z	L	L
	x	x	z	x	x
	z	x	z	x	x

<u>Examples of instantiation of *bufif* and *notif* gates.</u>

//Instantiation of bufif gates.

bufifl bl (out, in, ctrl) ;

bufif0 b0 (out, in, ctrl) ;

//Instantiation of notif gates

notifl nl (out, in, ctrl) ;

notif0 no (out, in, ctrl) ;

Example 1: Multiplexer 4: 1

<u>The Verilog code for 4 : 1 multiplexer is as shown below .</u>

The 1/O diagram and the truth table for the multiplexer are shown

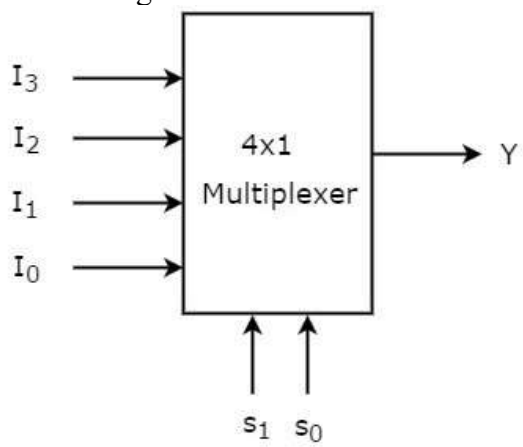

Input	S1	S0	Y
I_0	0	0	I_0
I_1	0	1	I_1
I_2	1	0	I_2
I_3	1	1	I_3

The logic diagram for the multiplexer is shown below.

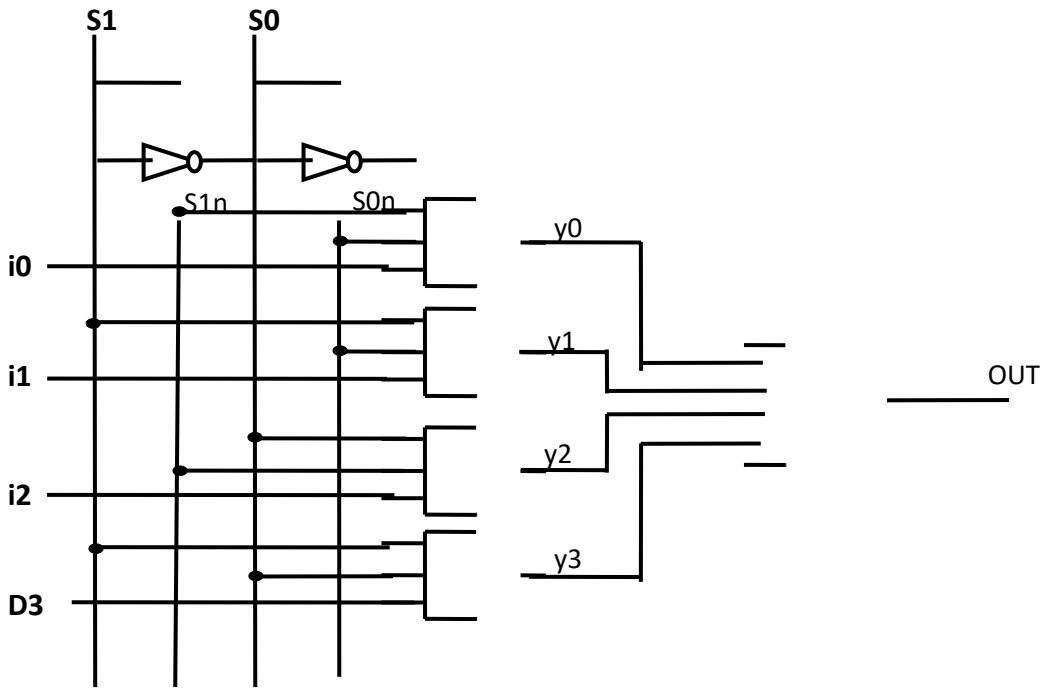

The Verilog description for the multiplexer is shown below;

```
module mux4-to-l (out, i0, il, i2, i3, sl, S0);
output out;
input i0, il, i2, i3;
input sl, S0;
wire s1n, son;
wire y0, yl, y2, y3;
not (sln, sl) ;
not (s0n, S0);
and (y0, i0, sln, s0n);
and (yl, il, sln, s0);
and (y2, i2, sl, s0n);
and (y3, i3, sl, S0);
or (out, y0, yl, y2, y3);
end module
```

This multiplexer can be tested with the stimulus as shown below.

<u>Stimulus for Multiplexer</u>

```
// Define the stimulus module (no ports)
module stimulus;
// Declare variables to be connected  to inputs
reg IN0, IN1, IN2, IN3;
reg S1, S0;
// Declare output wire
wire OUTPUT;
// Instantiate the multiplexer
mux4-to-1 mymux (OUTPUT, INO, IN1, IN2, IN3, S1, SO) ;
// define the stimulus module (no ports)
// Stimulate the inputs
initial
begin
// set input lines
IN0 = 1; IN1 = 0; IN2 = 1; IN3 = 0;
#l $display("IN0= %b,  IN1= %b,  IN2= %b,  IN3= %b\n  , IN0, IN1, IN2, IN3);
// choose IN0
S1 = 0; S0 = 0;
#l $display("Sl = %b, S0= %b, OUTPUT = %b/n, S1, S0, OUTPUT);
// choose IN1
S1 = 0; S0 = 1;
#l $display ("Sl = %b, S0 = %b, OUTPUT = %b \n", S1, S0, OUTPUT);
// choose IN2
S1 = l; S0 = 0;
#l $display("Sl = %b, S0 = %b, OUTPUT = %b \n , S1, S0, OUTPUT);
// choose IN3
S1 = l; SO = 1;
#l $display("Sl = %b, S0 = %b, OUTPUT = %b \n ,  S1, S0, OUTPUT);
End
endmodule
```

The output of the simulation is displayed as shown below

IN0= 1, IN1= 0, IN2= 1, IN3= 0

S1 = 0, S0 = 0, OUTPUT = 1

S1 = 0, S0 = 1, OUTPUT = 0

S1 = 1, S0 = 0, OUTPUT = 1

S1 = 1, S0 = 1, OUTPUT = 0

Example 2: **1-bit full adder:**

The logic diagram for a l-bit full adder is shown below:

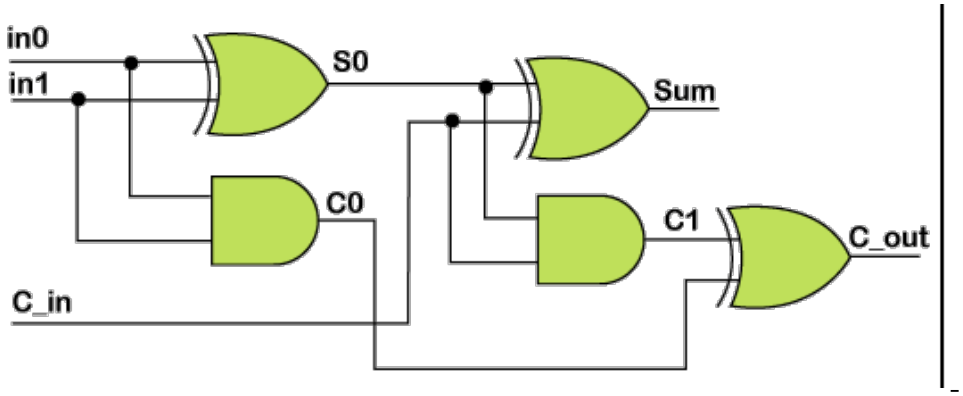

The Verilog description is given below:

module fulladd(sum, c-out, a, b, c-in) ;

output sum, c-out;

input a, b, c-in;

wire S0, C0, C1;

xor (S0, a, b);

and (C0, a, b);

xor (sum, S0, c-in) ;

and (C1, S0, c-in);

or (c-out, C0, Cl);

endmodule

Example 3: 4-bit full adder:

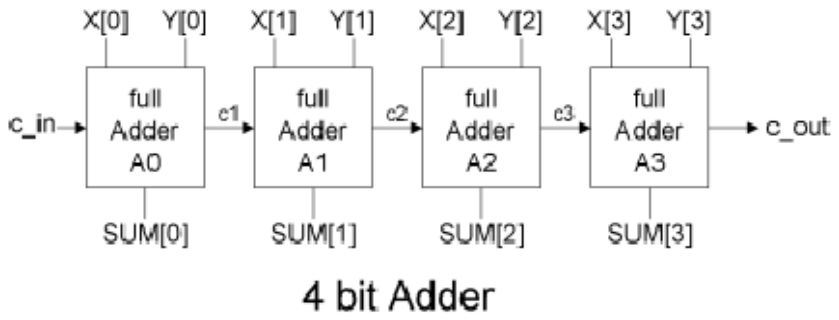

A0, A1, A2 and A3 are instances of the module full add. The Verilog code for the above circuit is as shown below.

module fulladd4(sum, c-out, x, y, c-in);
// I/O port declarations
output [3:01 sum;

```
output c-out;
input [3 : 01 a, b;
input c-in;
// Internal nets
wire cl, c2, c3;
// Instantiate four l-bit full adders.

fulladd A0  (sum[0l, cl, x[0], y[0], c-in);

fulladd A1 (sum[l], c2, x[1] , y[l] cl);

fulladd A2 (surn[2], c3, x[2], y[2], c2);

fulladd A3 (sum[3], c-out, x[3], b[3], c3);
endmodule
```

<u>The design is checked by applying stimulus.</u>

```
// Define the stimulus (top level module)
module stimulus;
reg [3:0] X, Y;
reg C-IN;
wire [3:0] SUM;
wire C-OUT;
// Instantiate the 4-bit full adder. call it FA1-4
fulladd4 FA1_4(SUM, C-OUT, X, Y, C-IN) ;
// Setu~ the monitorins for the sisnal values
initial
begin
$monitor($time," A= %b, B=%b, C-IN= %b, --- C-OUT= %b, SUM= %b\n’,
A, B, C-IN, C-OUT, SUM);
end
// Stimulate inputs
initial
begin
A = 4'd0;  B = 4'd0;  C-IN = l'b0;

#5  A = 4’d3,   B = 4’d4;

#5  A = 4’d2,   B = 4’d5;

#5  A = 4’d9,   B = 4’d9;
```

#5 A = 4’d10, B = 4’d15;

A = 4'd10; B = 4'd5; C-IN = l'b1;

end
endmodule
The output of the simulation is shown below.

0 A= 0000, B=0000, C-IN= 0, --- C-OUT= 0, SUM= 0000

5 A= 0011, B=0100, C-IN= 0, --- C-OUT= 0, SUM= 0111

10 A= 0010, B=0101, C-IN= 0, --- C-OUT= 0, SUM= 0111

15 A= 1001, B=1001, C-IN= 0, --- C-OUT= 1, SUM= 0010

20 A= 1010, B=llll, C-IN= 0, --- C-OUT= 1, SUM= 1001

25 A= 1010, B=0101, C-IN= *l,* C-OUT= 1, SUM= 0000

Gate Delays

In real circuits, logic gates have delays associated with them.

There are three types of delays from the inputs to the output of a primitive gate.

- **Rise delay**
- **Fall delay**
- **Turn-off delay**

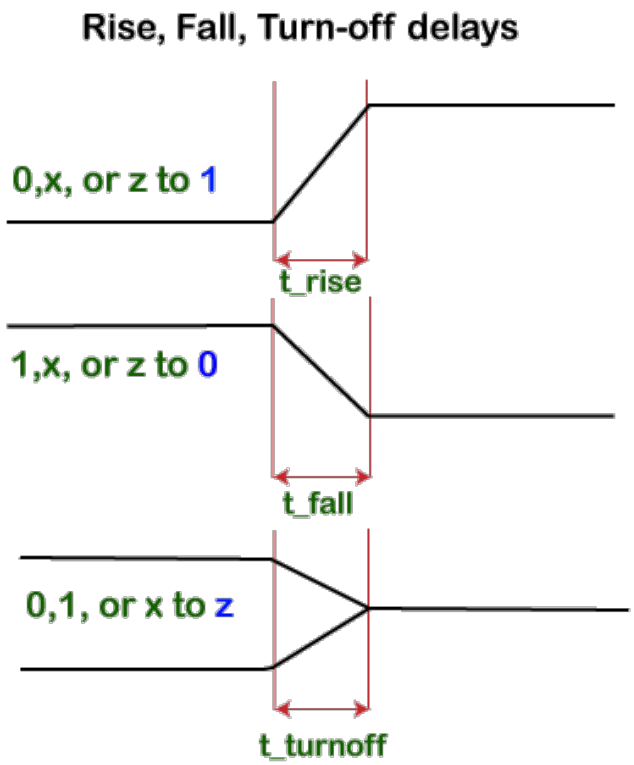

<u>Rise delay</u>
The time taken for the output of a gate to change from some value to 1 is called a rise delay.

<u>Fall delay</u>

The time taken for the output of a gate to change from some value to 0 is called a fall delay

<u>Turn-off delay:</u>
The time taken for the output of a gate to change from some value to high impedance (z) is called turn-off delay.

- If the value changes to X, the minimum of the three delays is considered, Three types of delay specifications are allowed.
- If only one delay is specified, this value is used for all transitions.

  Example:

  Delay of delay-time for all transitions,

  Syntax:

  and #(delay-time) al (out, il, i2);

  and #(5) al (out, il, i2); //Delay of 5 for all transitions
- If two delays are specified, they refer to the rise and fall delay values.

  Example:

  Rise and Fall Delay Specification.

  Syntax

  and # (rise-val, fall-val) a2 (out, il, i2)

  and #(4,6) a2(out, il, i2); // Rise = 4, Fall = 6;

- If a11 three delays are specified, they refer to rise, fall, and turn-off delay values.

  Example:

  // Rise, Fall, and Turn-off Delay Specification

  Syntax

  Bufif0 #(rise-val, fall-val, turnoff-val) bl (out, in, control);

  buf if0 # (3,4,5)b l (out,i n, control); // ~ise= 3, Fall = 4, Turn-off = 5

<u>Min / Typ / Max Values</u>

For each type of delay-rise, fall, and turn-off-three values, min, typ, and max, can be specified. Any one value can be chosen at the start of the simulation.

<u>Min value</u>

The min value is the minimum delay value that the designer expects the gate to have.

Max value

The max value is the maximum delay value that the designer expects the gate to have.

Min, typ, or max values can be chosen at Verilog run time. Method of choosing a min/typ/max value may vary for different simulators or operating systems. If no option is specified, the typical delay value is the default.

Examples of min, typ, and max value specification is given below.

// One delay

and #(4:5:6) al(out, il, i2);

// if +mindelays, delay= 4

// if +typdelays, delay= 5

// if +maxdelays, delay= 6

// Two delays

and #(3:4:5, 5:6:7) a2(out, il, i2);

// if +mindelays, rise= 3, fall= 5, turn-off = min (3,5)

// if +typdelays, rise= 4, fall= 6, turn-off = min (4,6)

// if +maxdelays, rise= 5, fall= 7, turn-off = min (5,7)

// Three delays

and #(2:3:4, 3:4:5, 4:5:6) a3(out, il,i2);

// if +mindelays, rise= 2 fall= 3 turn-off = 4

// if +typdelays, rise= 3 fall= 4 turn-off = 5

// if +maxdelays, rise= 4 fall= 5 turn-off = 6

<u>Delay Example</u>

Consider the equation

out = (a . b) + c

The logic diagram for the above equation is as shown below. The gate-level implementation is shown below.

```
module D (out, a, b, c);
output out;
input a,b,c;
wire e;
and # (5) a1 (e, a, b) ; //Delay of 5 on gate a1
or #(4) ol(out, e,c); //Delay of 4 on gate 01
endmodule
```

This module is tested by the stimulus file shown below

```
module stimulus
reg A, B, C;
wire OUT;
D dl( OUT, A, B, C);
// Stimulate the inputs. Finish the simulation at 40 time units
```

```
initial
begin
A= l'bO; B= l'bO; C= l'bO;
#l0 A= l'bl; B= l'bl; C= l'bl;
#l0 A= l'bl; B= l'bO; C= l'bO;
#20 $finish;
end
endmodule
```