BMS COLLEGE OF ENGINEERING, BANGALORE-19
(Autonomous Institute, Affiliated to VTU)
Department of ECE

I INTERNALS

Course Code : 23EC3PCNAL	Course Title : NETWORK ANALYSIS	
Semester : III	Maximum Marks: 40	Date: 06/01/2024
Faculty Handling the Course: AM,SHH,ED,SMR		
Sections: A,B,C,D,E		
Instructions: Answer all the questions.		

PART-B

No.	Question	Marks	CO,PO
1	Apply the concept of source transformation to convert the circuit to a single current source in parallel with a single resistor 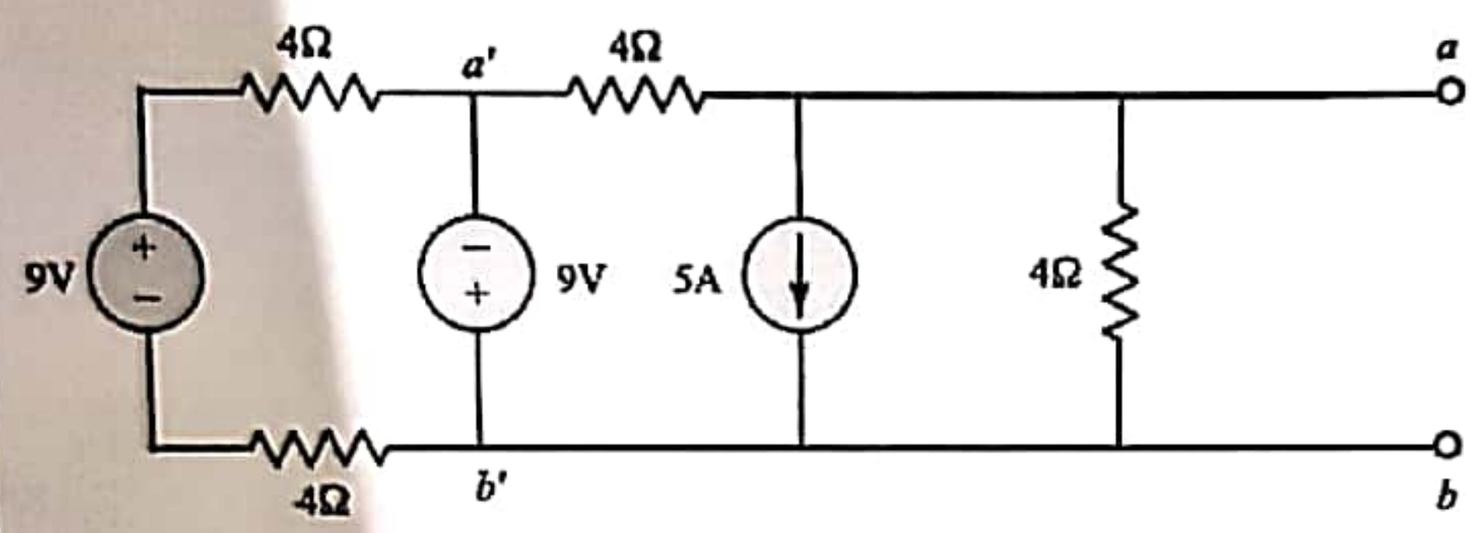	4	CO1/PO1
2	Apply the concept of Star-Delta conversion to find the equivalent resistance between a-b for the given circuit 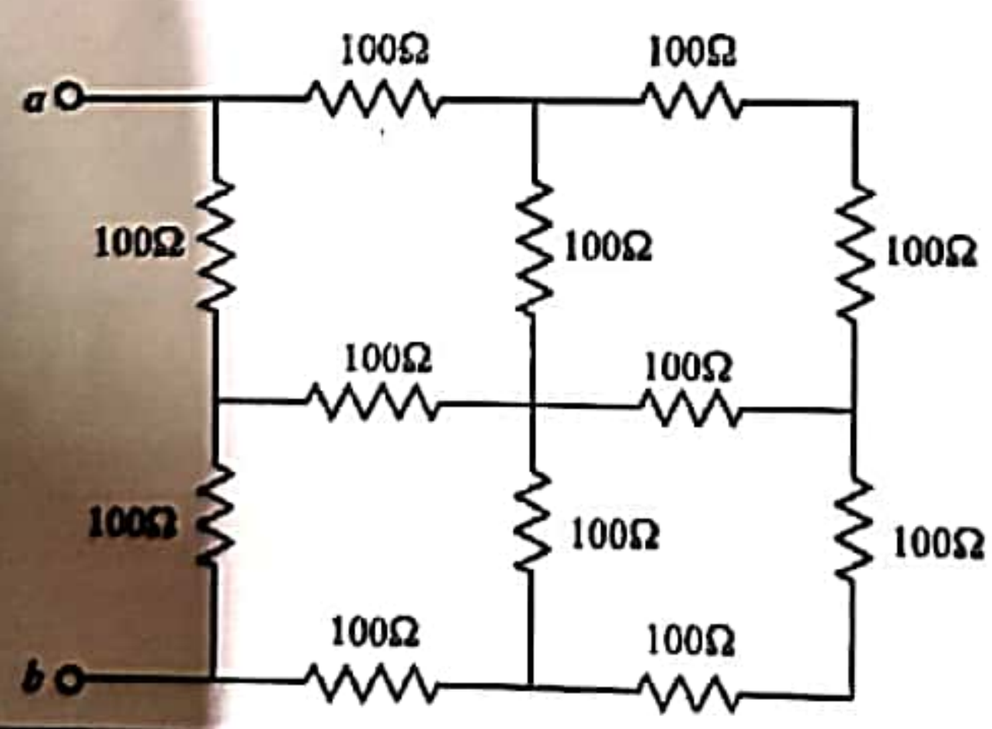	8	CO1/PO1
3	Apply the concept of node voltage technique to obtain the current I in the given electrical network. 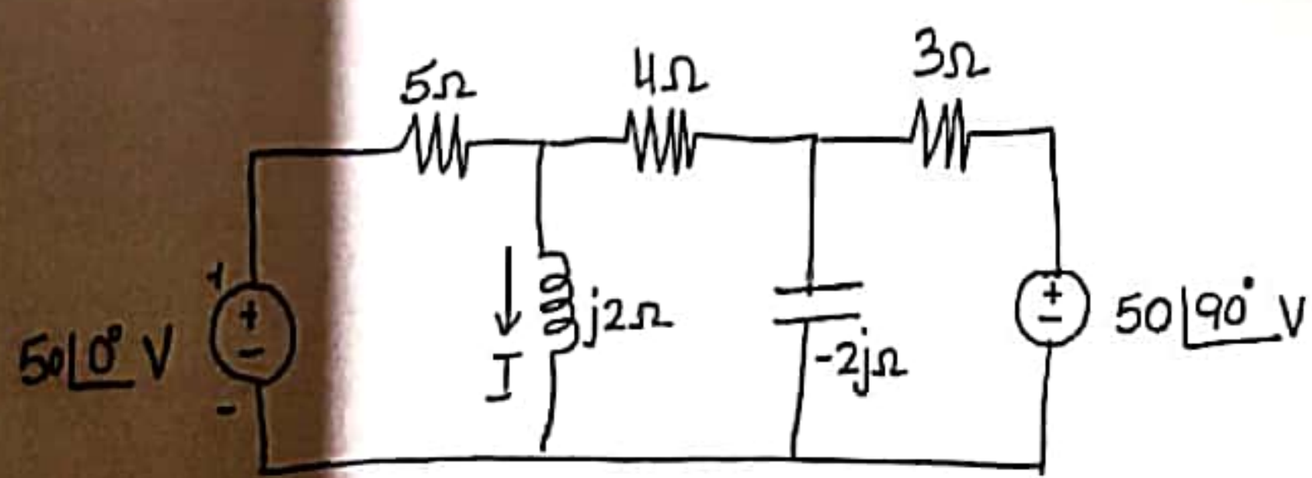	8	CO1/PO1

Scanned with OKEN Scanner

No.	Questio	Marks
4	Analyse the given electrical network to find the current io by applying the Supermesh concept. 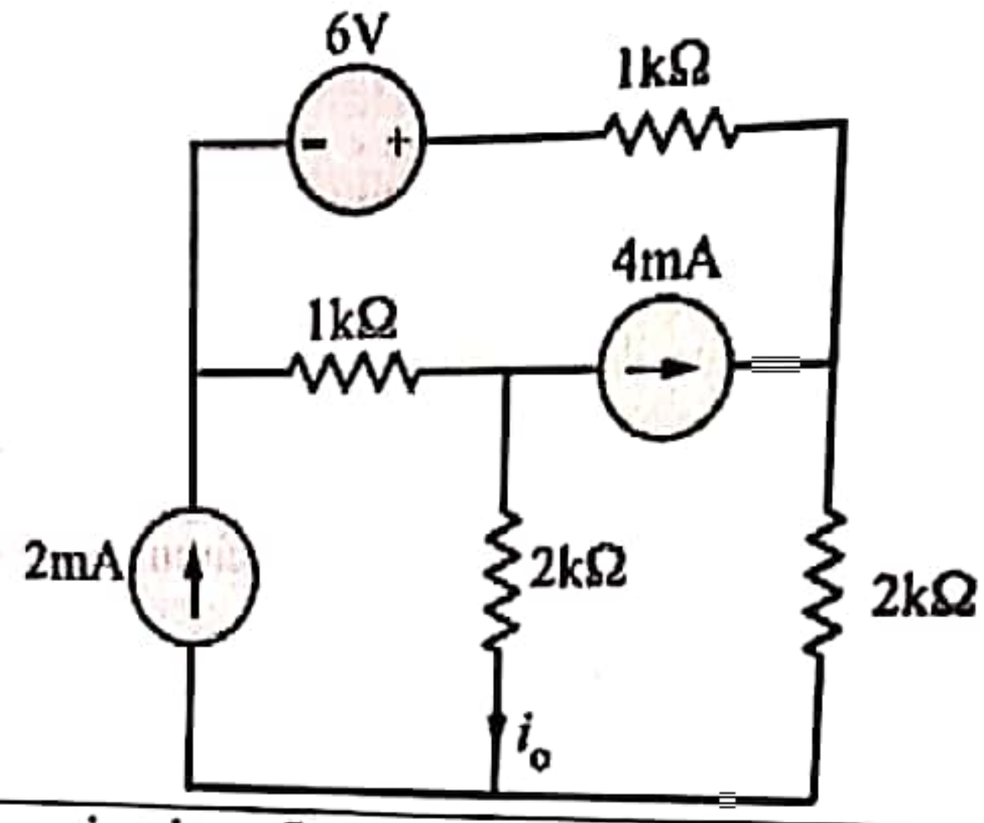	10
5	Analyse the given circuit to find the power developed by the 20 V by using node-voltage method 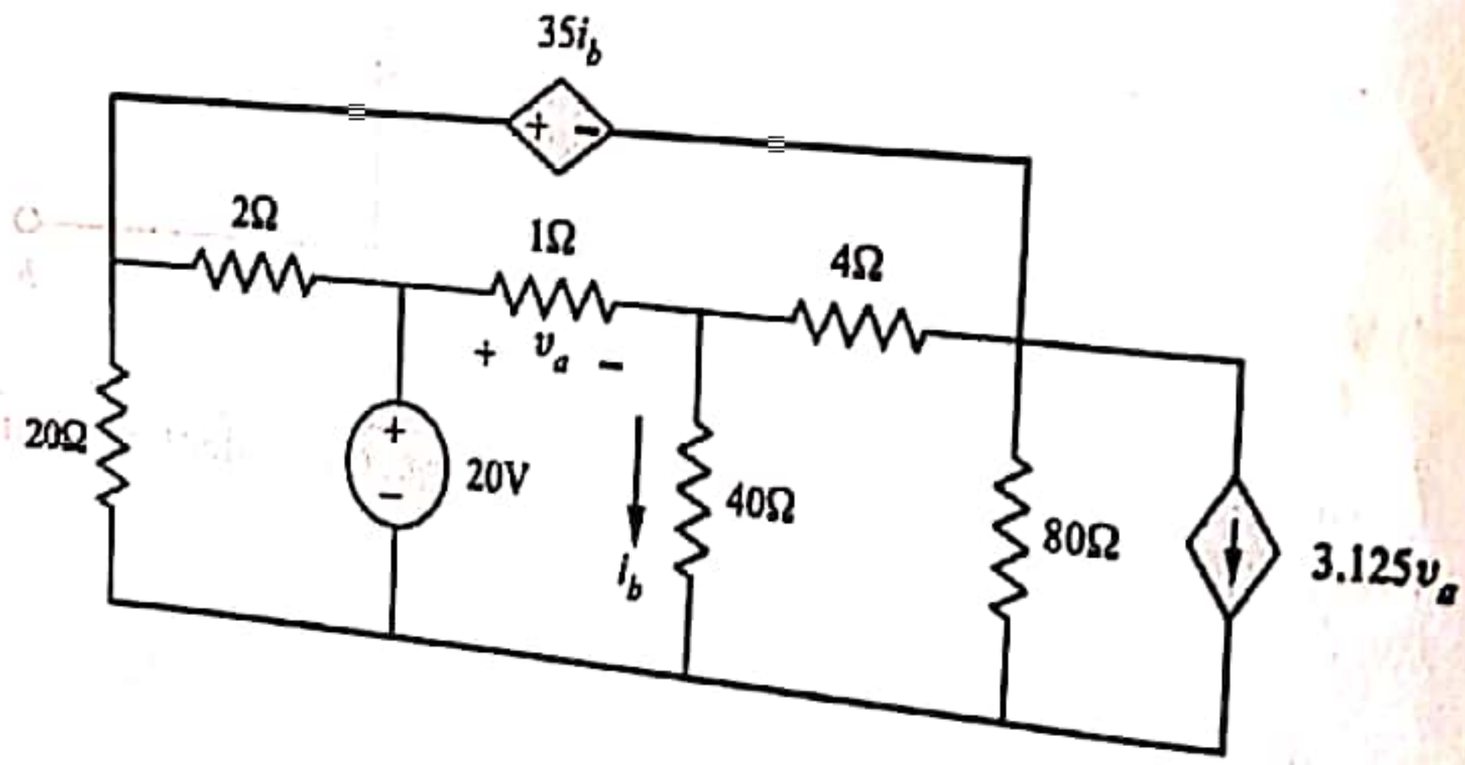	10

Scanned with OKEN Scanner