BMS COLLEGE OF ENGINEERING, BANGALORE-19
(Autonomous Institute, Affiliated to VTU)
Department of ECE

II INTERNALS

ES

Course Code : 23EC3PCNAL | Course Title : Network Analysis | Date: 12/02/2024

Semester : III | Maximum Marks: 40

Faculty Handling the Course: AM,SHH,ED,SMR

Sections: A,B,C,D,E

Instructions: Answer all the questions.

PART-A

No.	Question	Marks	CO,PO
1	Explain open circuit and transmission parameters	6	--

PART-B

No.	Question	Marks	CO,PO
2	Apply the knowledge of superposition theorem and find current i 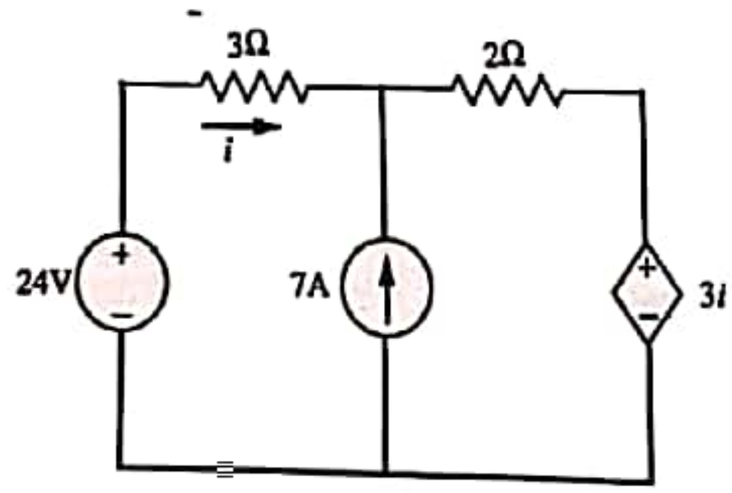	6	CO1/PO1
3	Find the hybrid parameters for the two-port network shown in Fig 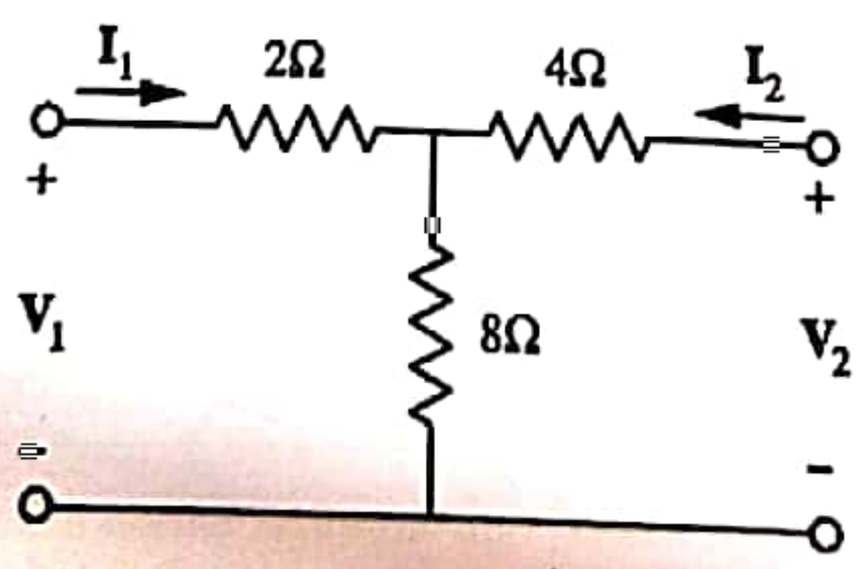	8	CO1/ PO1

Scanned with OKEN Scanner

PART- C

No.	Question	Marks	CO.PO
4	Analyse the given circuit using Maximum power transfer theorem and find the load resistance to be connected across terminals for the maximum power transfer. Also find maximum power delivered to the load. 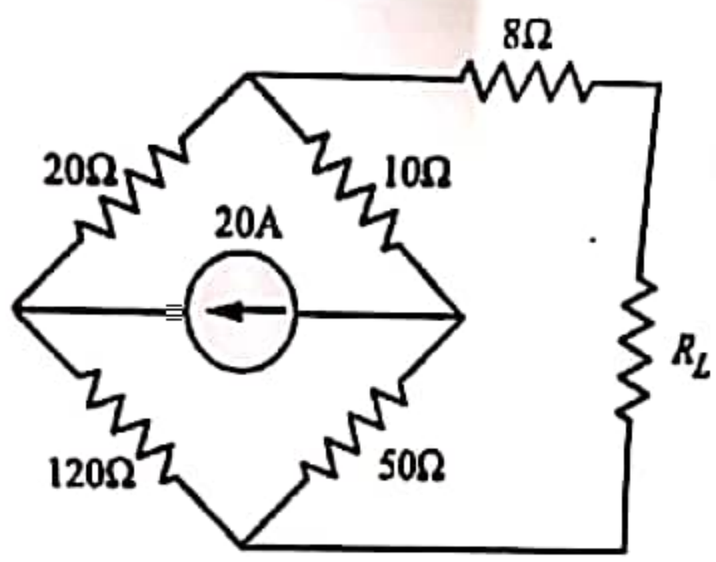	10	CO2/ PO2
5	In the single current source circuit shown in fig. Find voltage Vx. Interchange the current source and resulting voltage Vx. Analyze the given circuit to check whether reciprocity theorem verified? 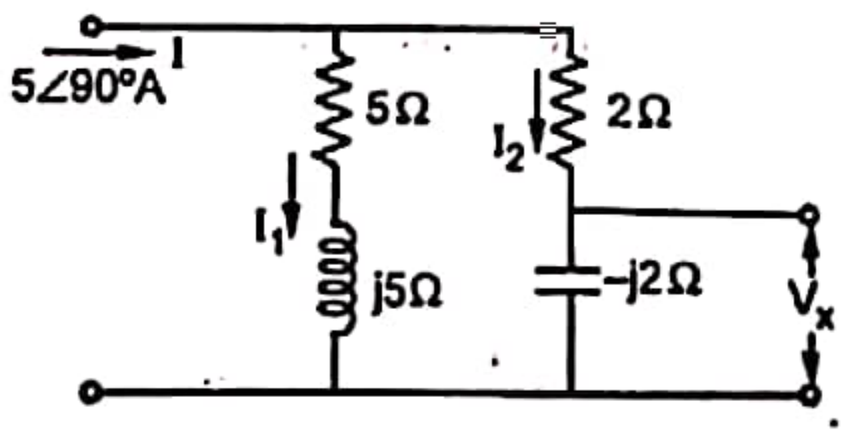	10	CO2/ PO2

Scanned with OKEN Scanner
Scanned with OKEN Scanner