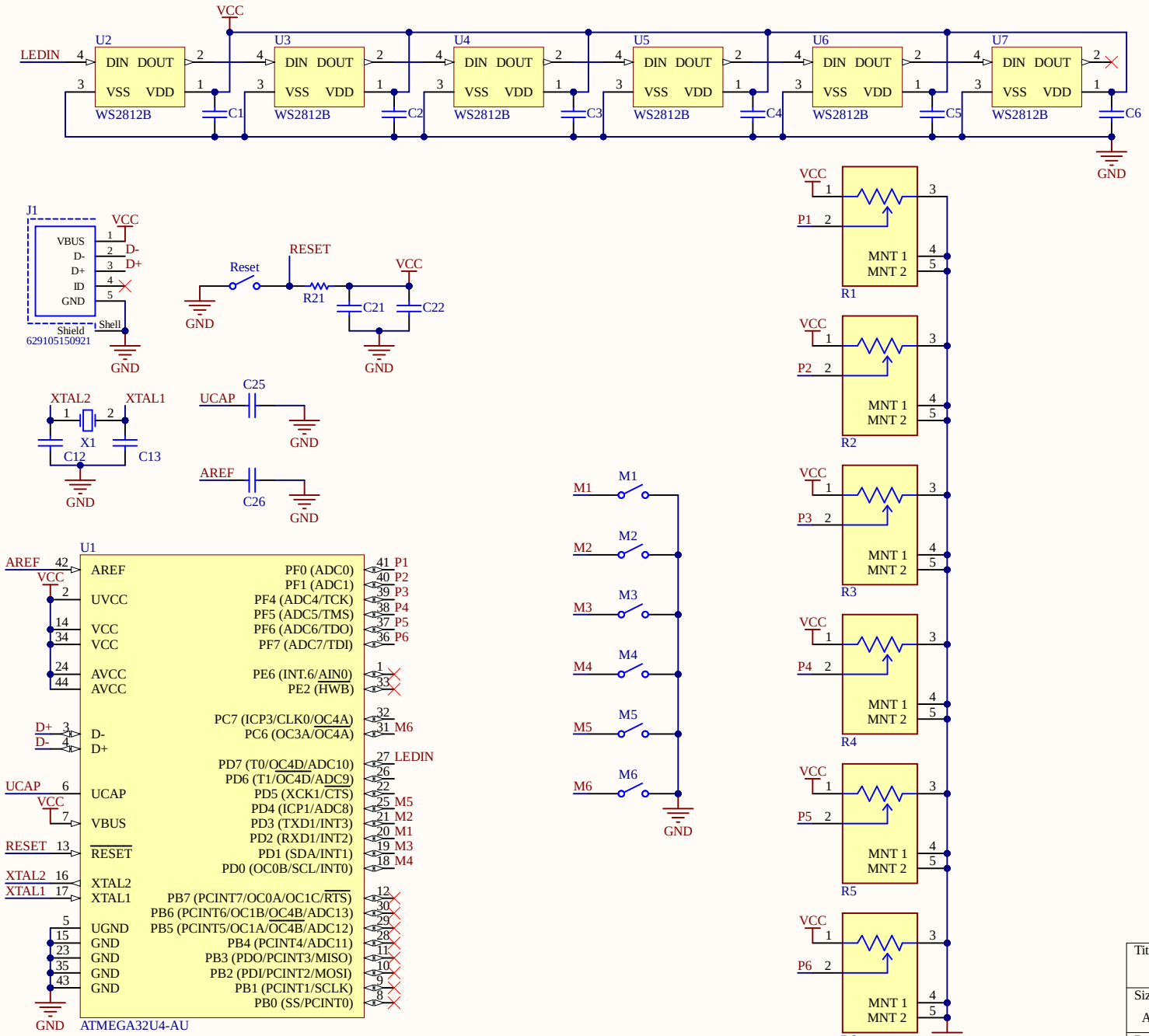

Title		
Size A4	Number	Revision
Date: 10/25/2020		Sheet of
File: C:\Users\..\Sheet1.SchDoc		Drawn By:

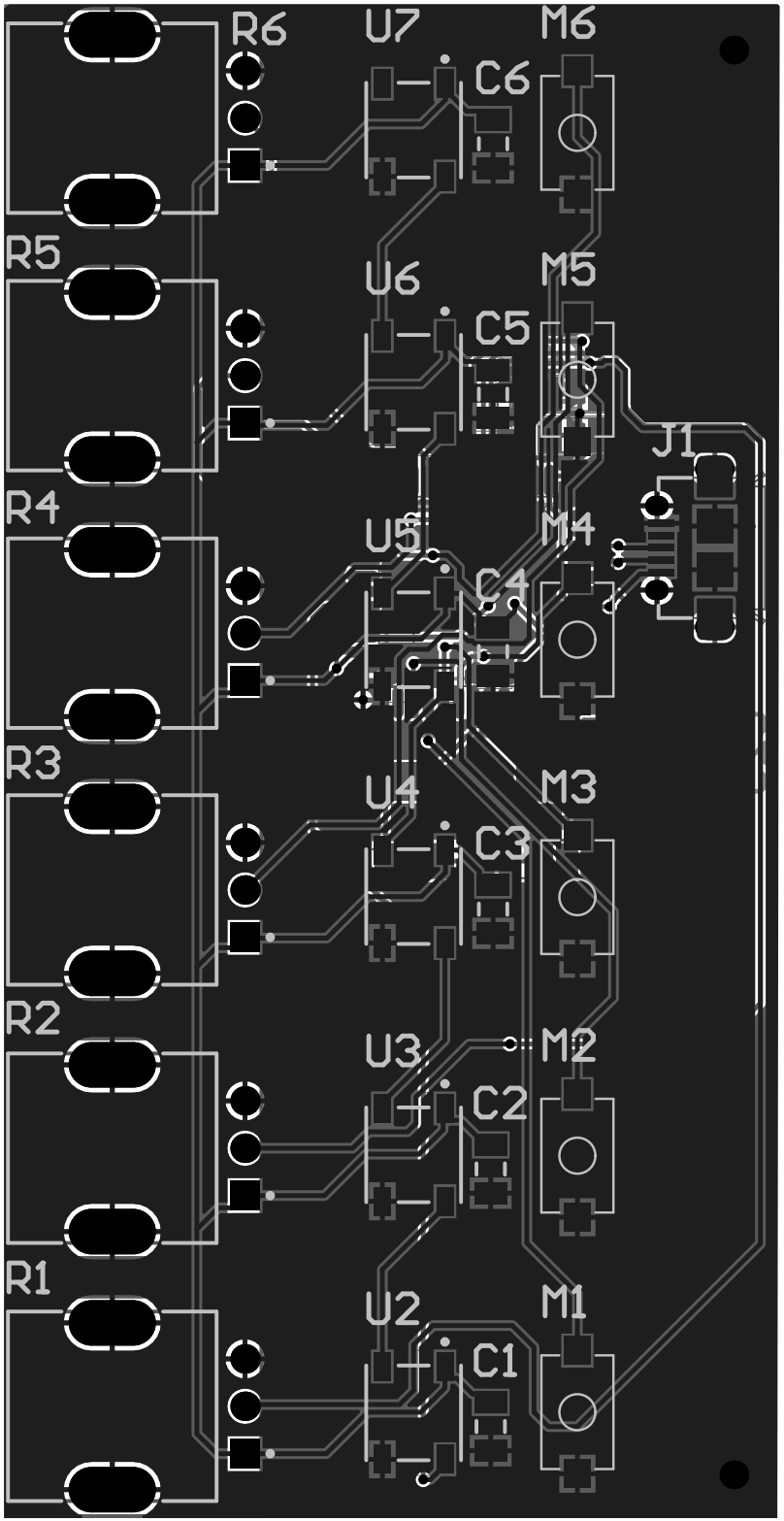
R6
U7
M6
C6
R5
U6
M5
C5
J1
R4
U5
M4
C4
R3
U4
M3
C3
R2
U3
M2
C2
R1
U2
M1
C1

Board Stack Report