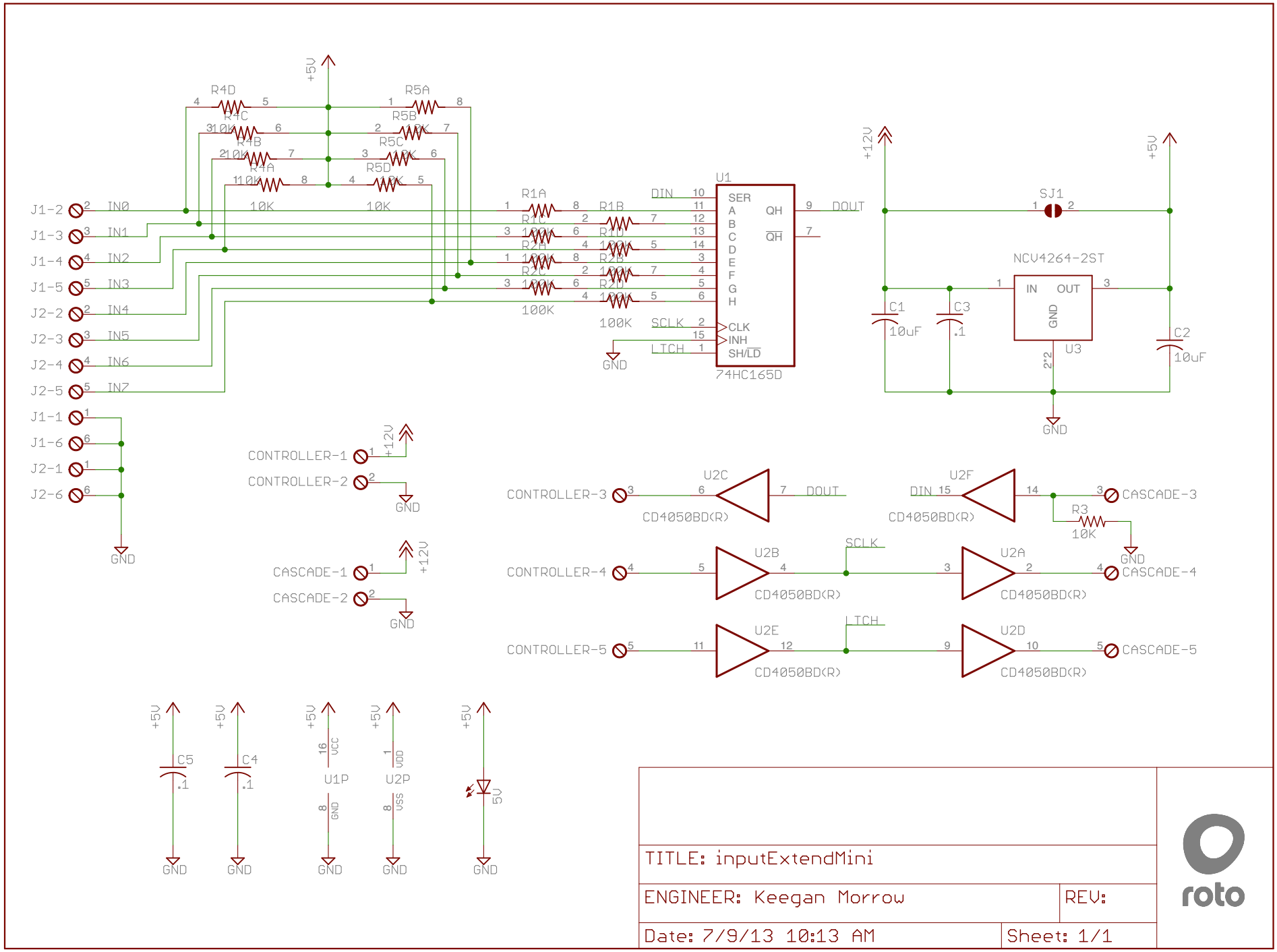

TITLE: inputExtendMini

ENGINEER: Keegan Morrow

REV:

Date: 7/9/13 10:13 AM

Sheet: 1/1