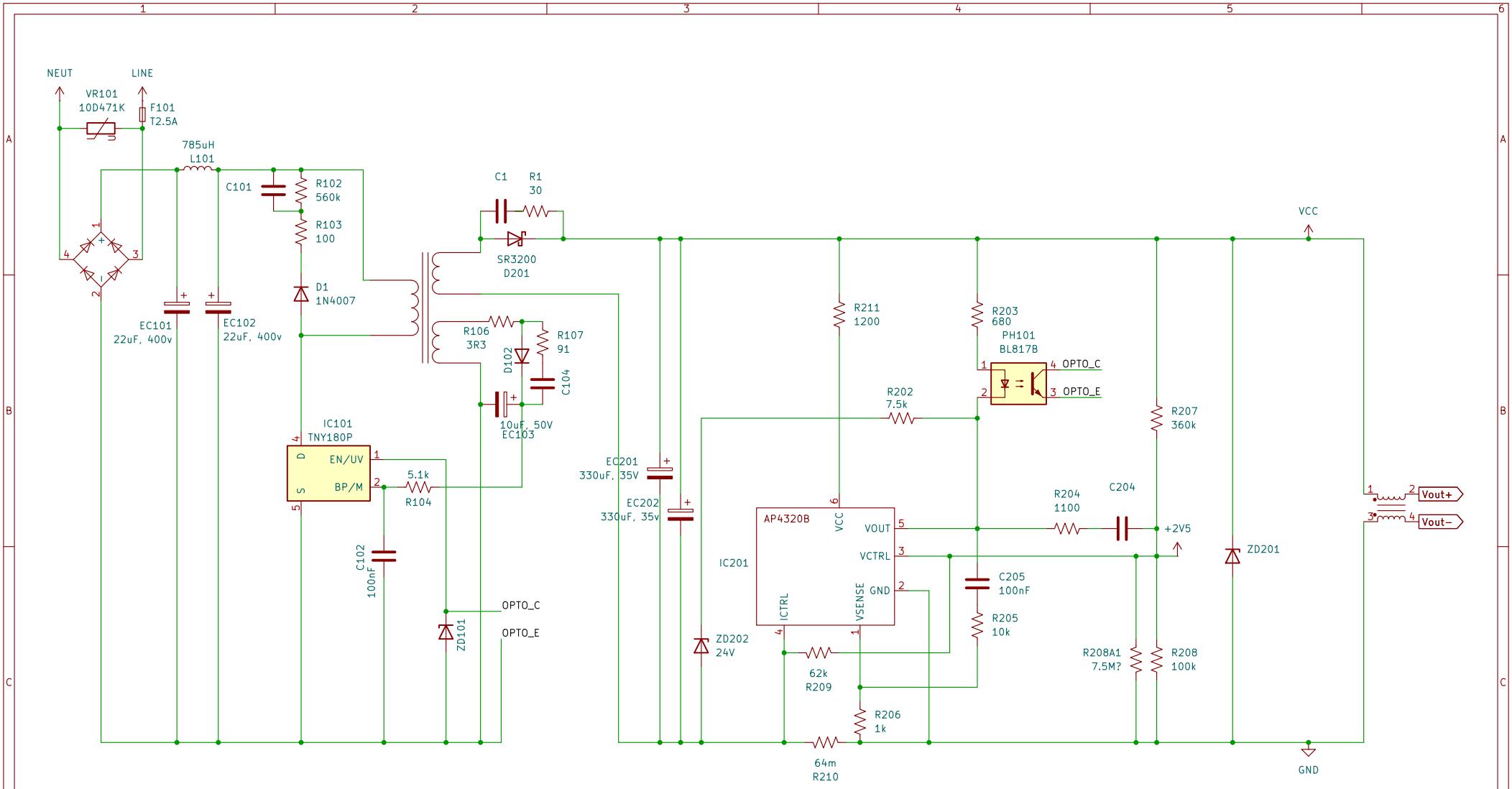

Secondary: Typical Application 1 Circuit of AP4320 (from datasheet)
Vout=Vref*(R1+R2)/R1 = 24.1V
R2=R207=360k, R1=R208//R208A//(R209+R210) =~ 38k
Current limit = Vsense/R210 = 50mV/64mOhm =~ 0.78A

Manufacturer: Salom Electric
26.1V, 0.78A
Dyson

Sheet: /
File: 25720−03 Power Supply.kicad_sch

Title: 205720−03 power supply

Size: A4	Date:	**Rev:**
KiCad E.D.A. 9.0.2		Id: 1/1