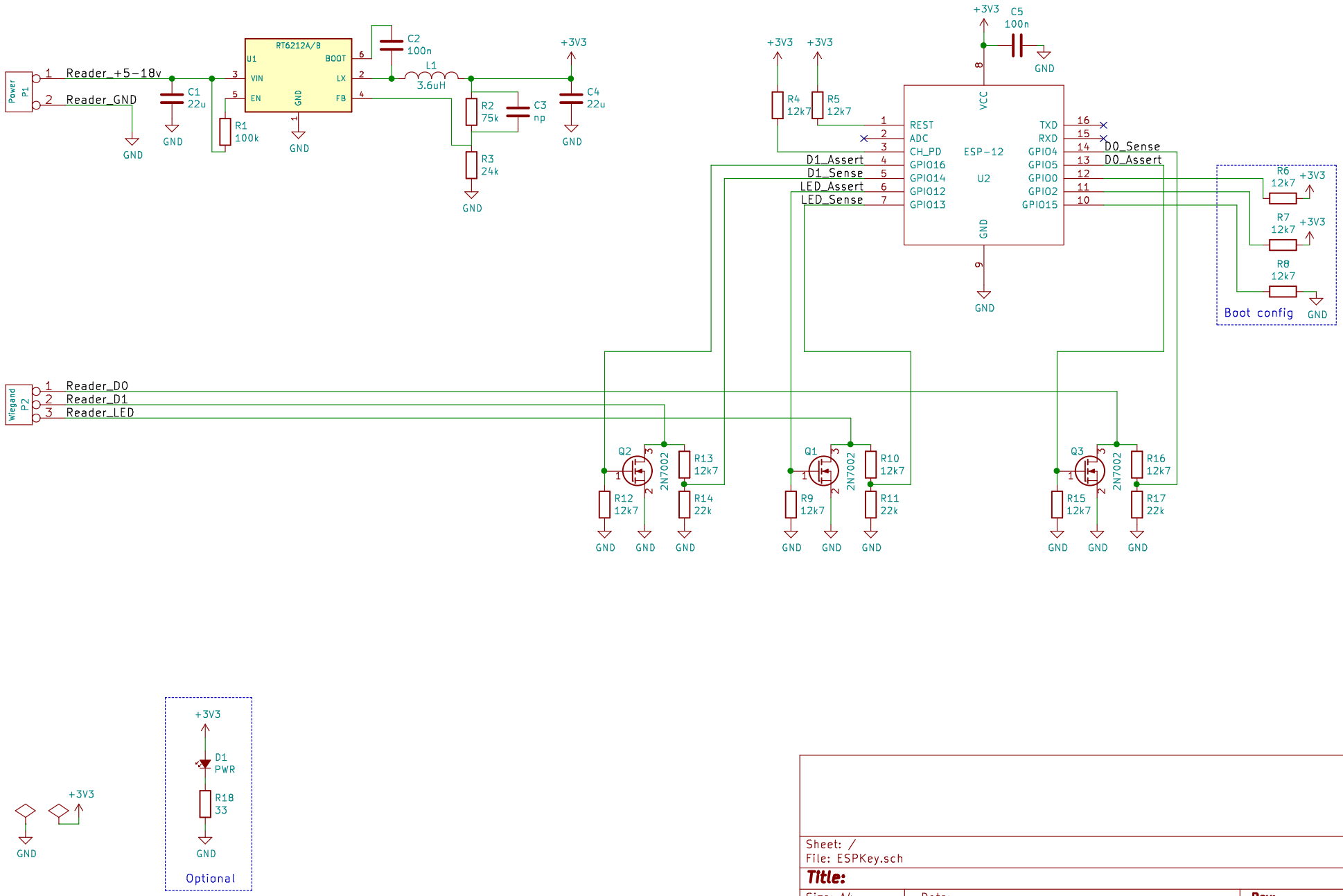

Sheet: /
File: ESPKey.sch

Title:

Size: A4	Date:	Rev:
KiCad E.D.A. kicad 4.1.0-alpha+201606141244+693345ubuntu16.04.1-product		Id: 1/1