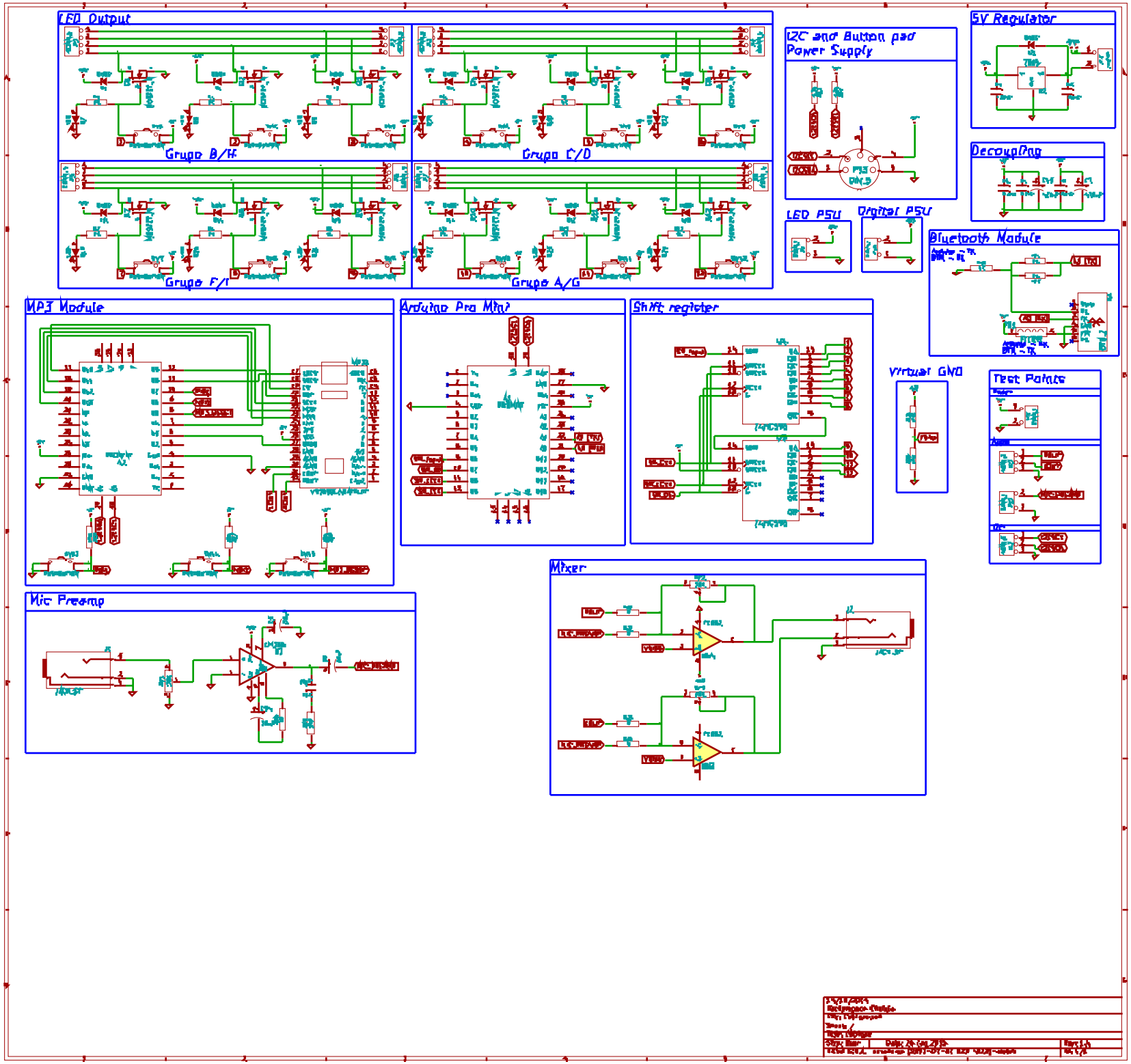
LED Output
Grupo B/H
Grupo C/D
Grupo F/I
Grupo A/G
I2C and Button pad Power Supply
5V Regulator
Decoupling
LED PSU
Digital PSU
Bluetooth Module
MP3 Module
Arduino Pro Mini
Shift register
Virtual GND
Test Points
Mixer
Mic Preamp