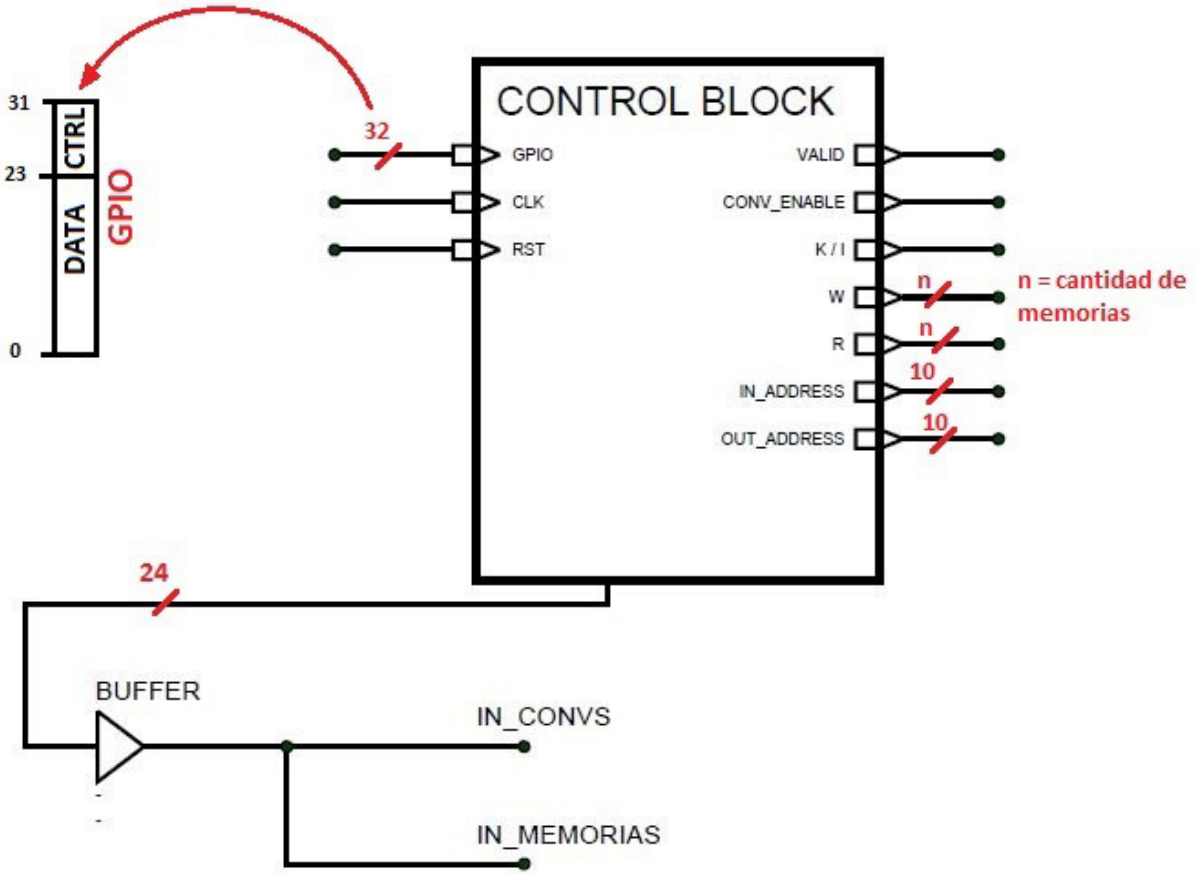
31
23
0
CTRL
DATA
GPIO
32
CONTROL BLOCK
GPIO
CLK
RST
VALID
CONV_ENABLE
K / I
W
R
IN_ADDRESS
OUT_ADDRESS
n
n
10
10
n = cantidad de memorias
24
BUFFER
IN_CONVS
IN_MEMORIAS

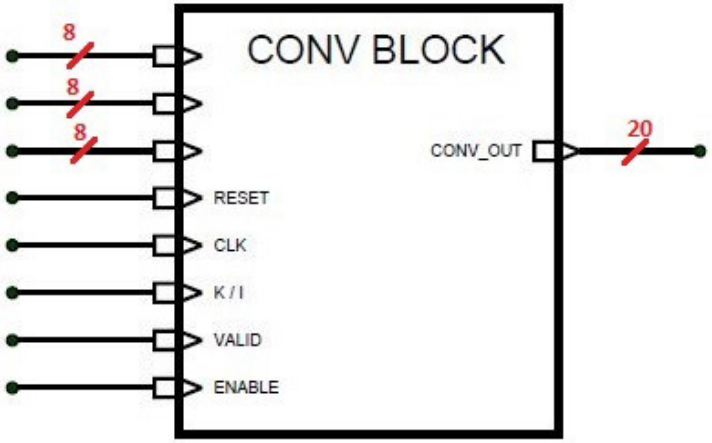
8
8
8
CONV BLOCK
CONV_OUT
20
RESET
CLK
K / I
VALID
ENABLE

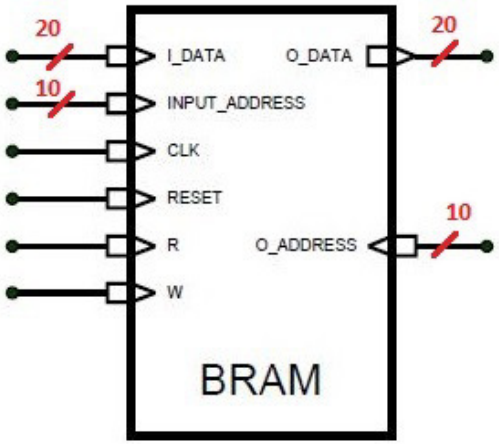
20
10
I_DATA
INPUT_ADDRESS
CLK
RESET
R
W
O_DATA
O_ADDRESS
20
10
BRAM