Interface "graph" between object and PlcPgm

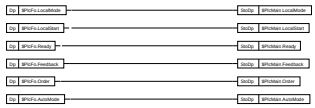

Backup

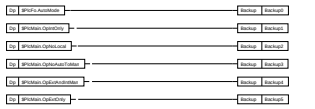

Functionobject StartStop/Manual/Auto, Local/Remote

Class-CompModeDFo-Code
W
22-JAN-2010 11:44 Proview 1 (5)

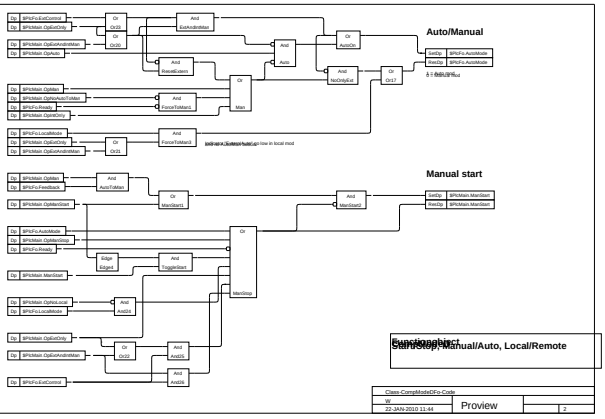

Functionobject StartStop/Manual/Auto, Local/Remote

Class-CompModeDFo-Code
W
22-JAN-2010 11:44 Proview 2

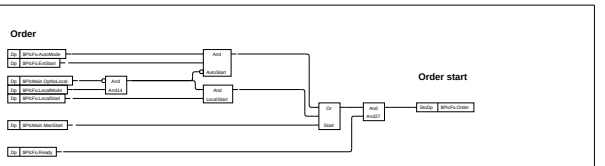

Functionobject StartStop/Manual/Auto, Local/Remote

Class-CompModeDFo-Code
W
22-JAN-2010 11:44 Proview 3

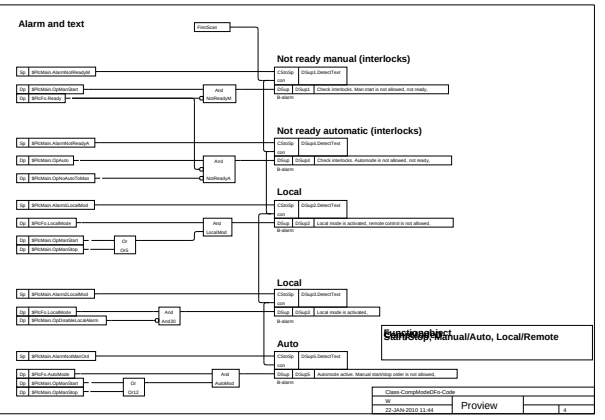

Functionobject StartStop/Manual/Auto, Local/Remote

Class-CompModeDFo-Code
W
22-JAN-2010 11:44 Proview 4

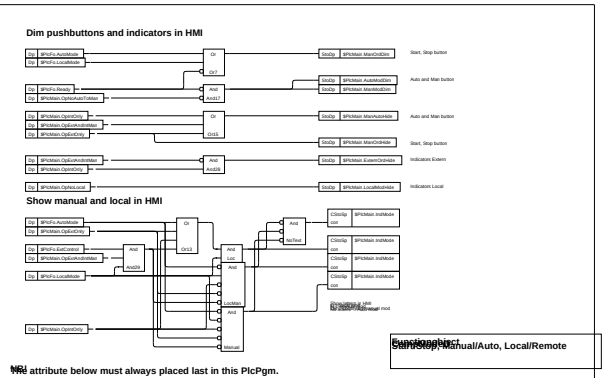

Functionobject StartStop/Manual/Auto, Local/Remote

NBU
The attribute below must always placed last in this PlcPgm.

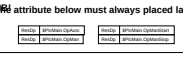

Class-CompModeDFo-Code
W
22-JAN-2010 11:44 Proview 5