Interface "graph" between object and PlcPgm

Interface graphname:

RefSpeedEst = RLC1
RefSpeedLoc = RLC2
PowerInterlock = pi
OpPowerOn = pon
OpPowerOff = poff
ExtControl = ecc
ExtStart = est
OpLocMode = lm
LocMode = loc
OpLocStart = ls
RecTrip = rp

Functionobject
ABB ACS800 MotorAggregate Ver.1
Fuse, Curcuit breaker, Contactor, Safetyswitch

Class-ABB_ACS800MotorAggFo-Code
W
01-OCT-2007 15:37
Proview
JE
1(5)

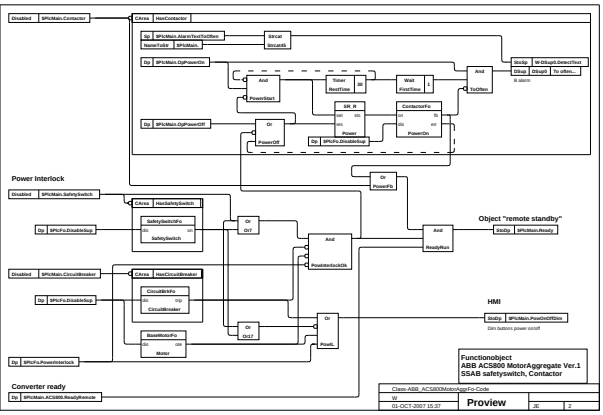

Functionobject
ABB ACS800 MotorAggregate Ver.1
SSAB safetyswitch, Contactor

Class-ABB_ACS800MotorAggFo-Code
W
01-OCT-2007 15:37
Proview
JE
2

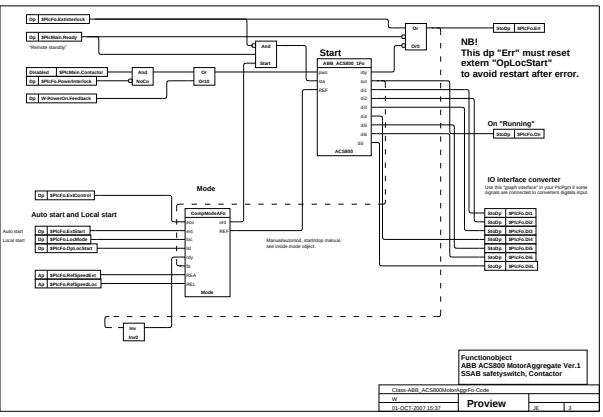

Functionobject
ABB ACS800 MotorAggregate Ver.1
SSAB safetyswitch, Contactor

Class-ABB_ACS800MotorAggFo-Code
W
01-OCT-2007 15:37
Proview
JE
3

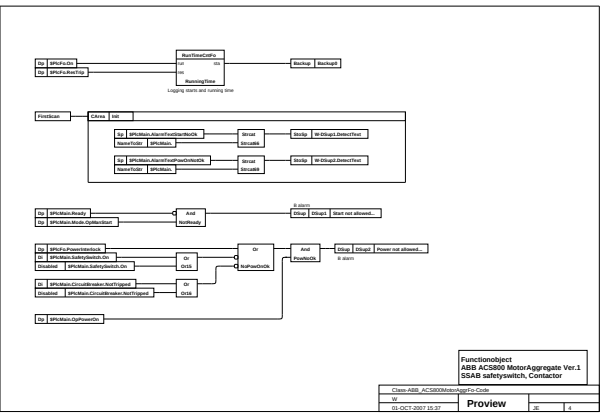

Functionobject
ABB ACS800 MotorAggregate Ver.1
SSAB safetyswitch, Contactor

Class-ABB_ACS800MotorAggFo-Code
W
01-OCT-2007 15:37
Proview
JE
4

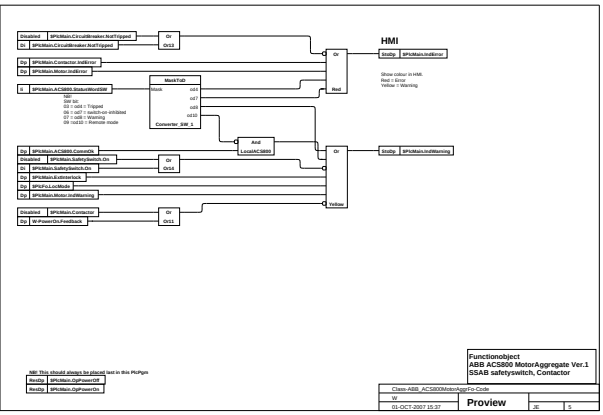

Functionobject
ABB ACS800 MotorAggregate Ver.1
SSAB safetyswitch, Contactor

Class-ABB_ACS800MotorAggFo-Code
W
01-OCT-2007 15:37
Proview
JE
5