Interface "graph" between object and PlcPgm

interface graphname:
LocalMode : Log
LocalStart : Log
Ready : Log
Feedback : Log
Order : Log
AutoMode : Log
OutRef : Log
Backup : Log

Dp	SPcFu.LocalMode	StoDp	SPcMain.LocalMode
Dp	SPcFu.LocalStart	StoDp	SPcMain.LocalStart
Dp	SPcFu.Ready	StoDp	SPcMain.Ready
Dp	SPcFu.Feedback	StoDp	SPcMain.Feedback
Dp	SPcFu.Order	StoDp	SPcMain.Order
Dp	SPcFu.AutoMode	StoDp	SPcMain.AutoMode
Ap	SPcFu.OutRef	StoAp	SPcMain.OutRef

Backup

Dp	SPcFu.AutoMode	Backup	Backup0
Dp	SPcMain.OpInOnly	Backup	Backup1
Dp	SPcMain.OpNoLocal	Backup	Backup2
Dp	SPcMain.OpNoAutoToMan	Backup	Backup3
Dp	SPcMain.OpLeAndMan	Backup	Backup4
Dp	SPcMain.OpLeOnly	Backup	Backup5
Ap	SPcMain.OpRefMan	Backup	Backup6

Functionobject
CompModeA (analog referens)
Start/Stop, Manual/Auto, Local/Remote

Class-CompModeAFu-Class
Proview

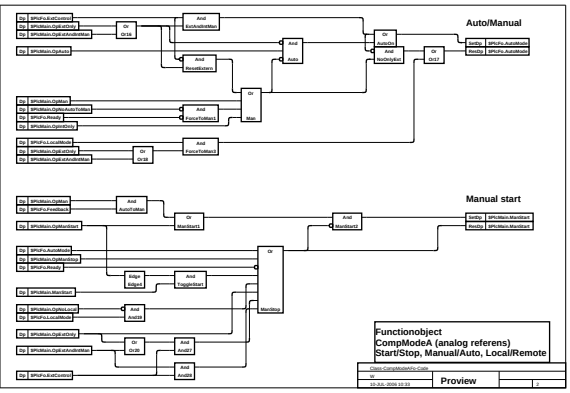

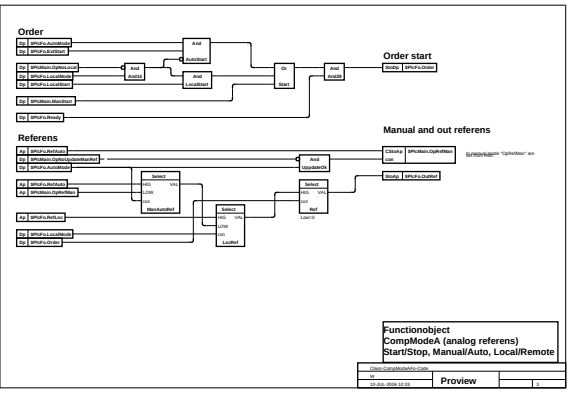

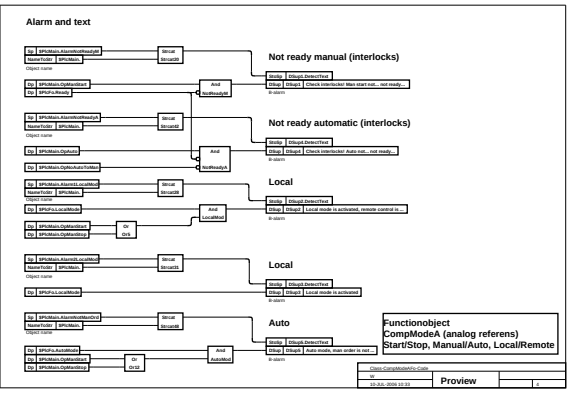

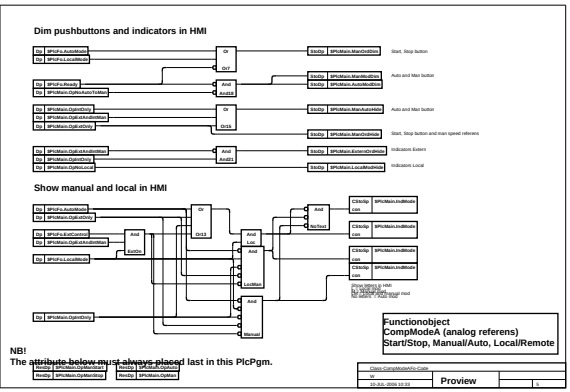

NB!
The attribute below must always placed last in this PlcPgm.

StoDp	SPcMain.OpManStart	StoDp	SPcMain.OpAuto
StoDp	SPcMain.OpManStop	StoDp	SPcMain.OpMan