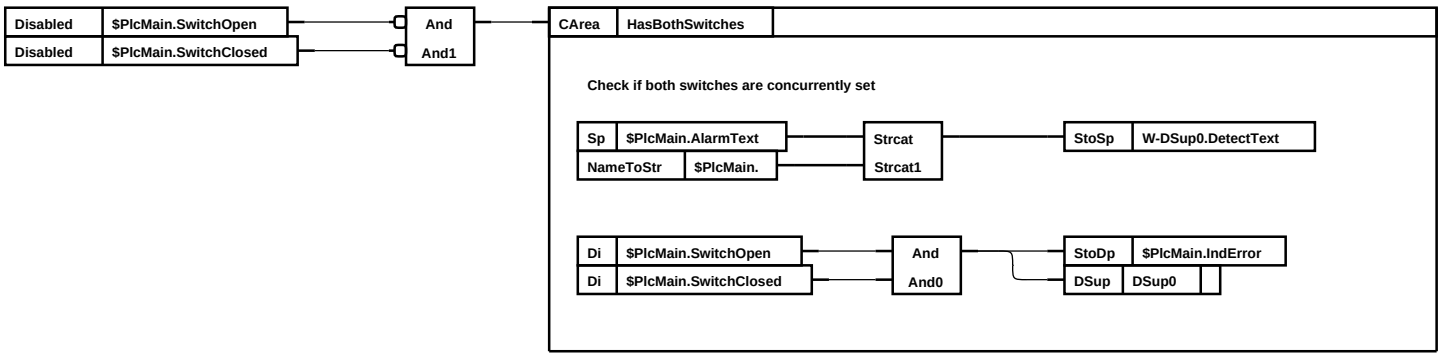

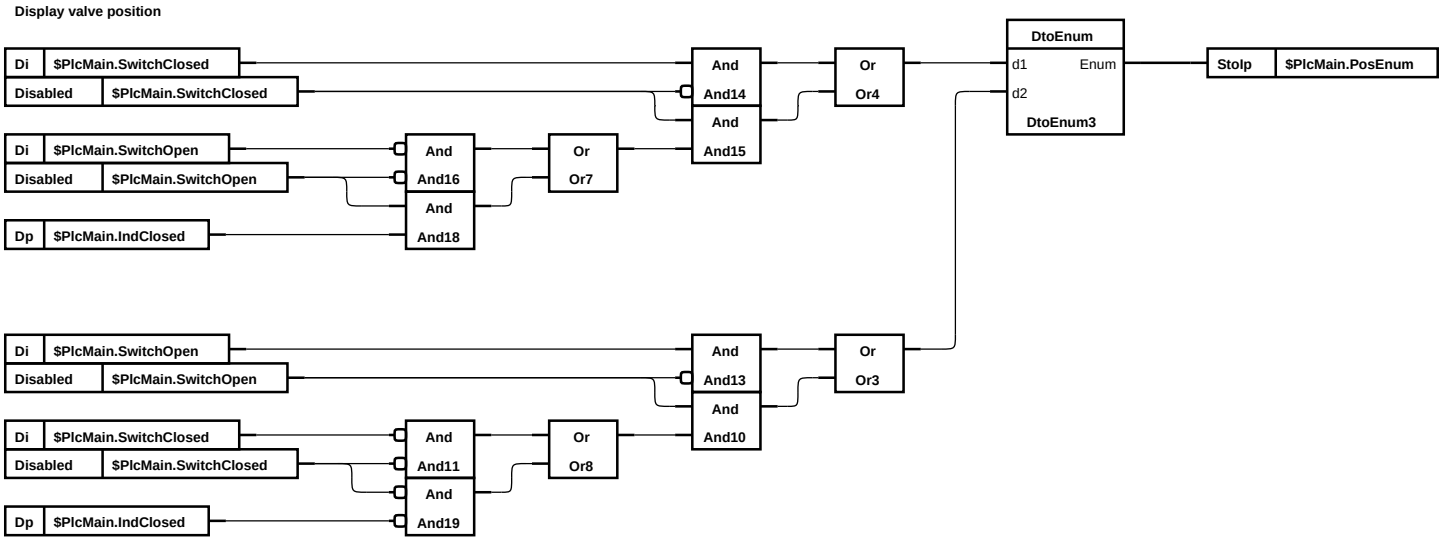

Class-BaseManValveFo-Code	
W	**Proview**
18-OCT-2005 15:32	