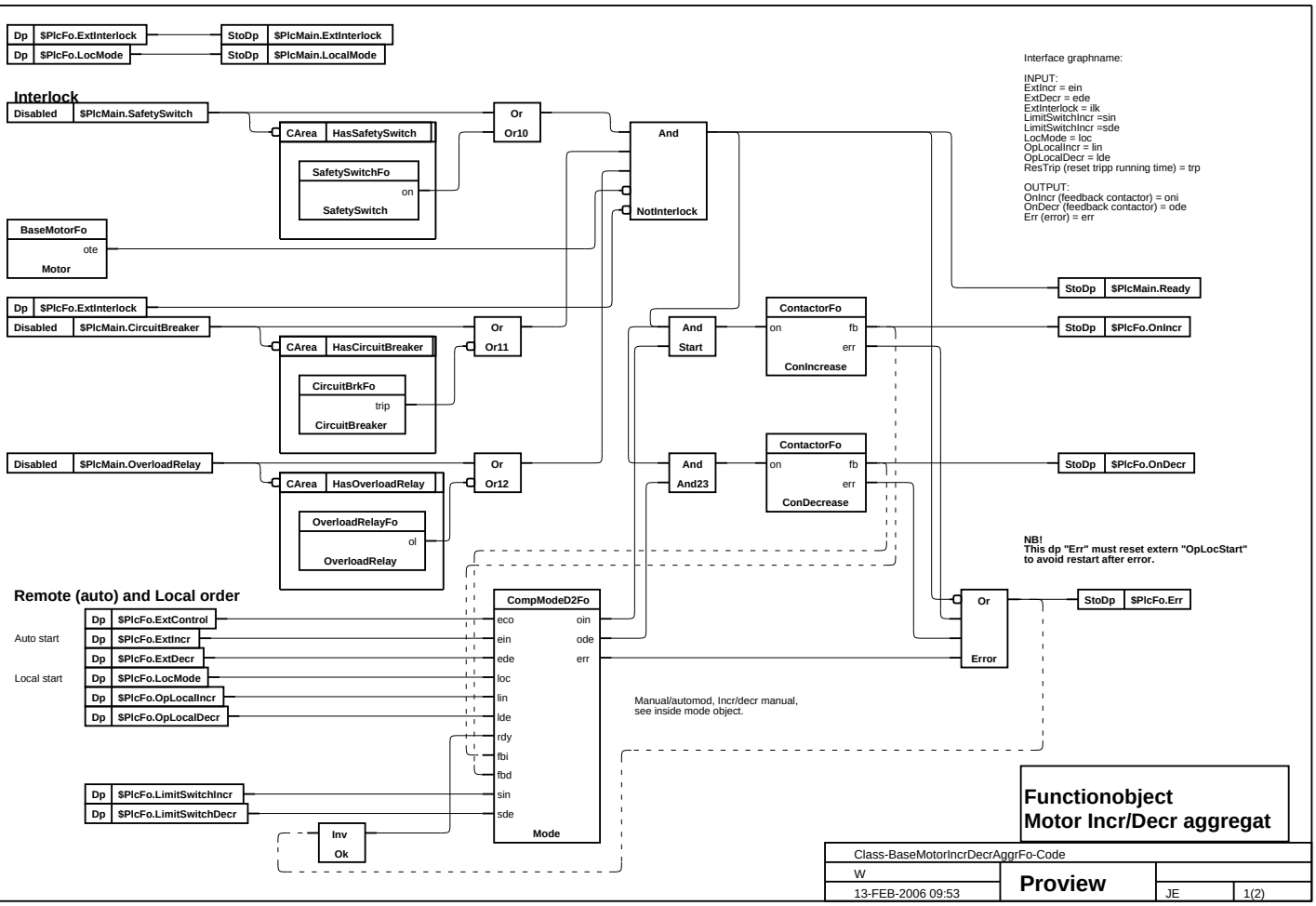
Dp $PlcFo.ExtInterlock
Dp $PlcFo.LocMode
StoDp $PlcMain.ExtInterlock
StoDp $PlcMain.LocalMode
Interface graphname:
INPUT:
ExtIncr = ein
ExtDecr = ede
ExtInterlock = ilk
LimitSwitchIncr =sin
LimitSwitchIncr =sde
LocMode = loc
OpLocalIncr = lin
OpLocalDecr = lde
ResTrip (reset tripp running time) = trp
OUTPUT:
OnIncr (feedback contactor) = oni
OnDecr (feedback contactor) = ode
Err (error) = err
Interlock
Disabled $PlcMain.SafetySwitch
CArea HasSafetySwitch
SafetySwitchFo
on
SafetySwitch
Or
Or10
And
NotInterlock
BaseMotorFo
ote
Motor
StoDp $PlcMain.Ready
Dp $PlcFo.ExtInterlock
Disabled $PlcMain.CircuitBreaker
CArea HasCircuitBreaker
CircuitBrkFo
trip
CircuitBreaker
Or
Or11
And
Start
ContactorFo
on
fb
err
ConIncrease
StoDp $PlcFo.OnIncr
Disabled $PlcMain.OverloadRelay
CArea HasOverloadRelay
OverloadRelayFo
ol
OverloadRelay
Or
Or12
And
And23
ContactorFo
on
fb
err
ConDecrease
StoDp $PlcFo.OnDecr
NB!
This dp "Err" must reset extern "OpLocStart"
to avoid restart after error.
Remote (auto) and Local order
Dp $PlcFo.ExtControl
Auto start
Dp $PlcFo.ExtIncr
Dp $PlcFo.ExtDecr
Local start
Dp $PlcFo.LocMode
Dp $PlcFo.OpLocalIncr
Dp $PlcFo.OpLocalDecr
CompModeD2Fo
eco
ein
ede
loc
lin
lde
rdy
fbi
fbd
sin
sde
oin
ode
err
Mode
Or
Error
StoDp $PlcFo.Err
Manual/automod, Incr/decr manual,
see inside mode object.
Dp $PlcFo.LimitSwitchIncr
Dp $PlcFo.LimitSwitchDecr
Inv
Ok
Functionobject
Motor Incr/Decr aggregat
Class-BaseMotorIncrDecrAggrFo-Code
W
13-FEB-2006 09:53
Proview
JE
1(2)

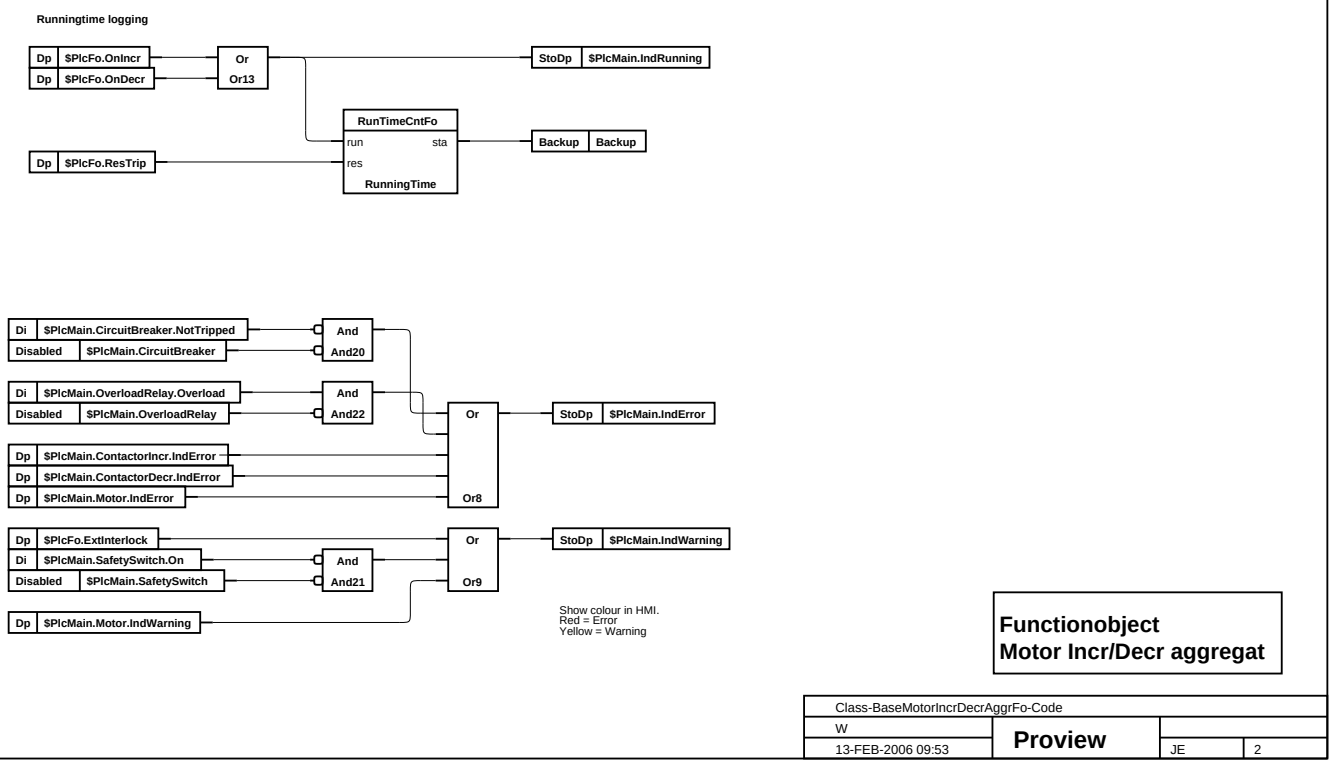
Runningtime logging
Dp $PlcFo.OnIncr
Dp $PlcFo.OnDecr
Or
Or13
StoDp $PlcMain.IndRunning
RunTimeCntFo
run
res
sta
RunningTime
Backup Backup
Dp $PlcFo.ResTrip
Di $PlcMain.CircuitBreaker.NotTripped
Disabled $PlcMain.CircuitBreaker
And
And20
Di $PlcMain.OverloadRelay.Overload
Disabled $PlcMain.OverloadRelay
And
And22
Or
Or8
StoDp $PlcMain.IndError
Dp $PlcMain.ContactorIncr.IndError
Dp $PlcMain.ContactorDecr.IndError
Dp $PlcMain.Motor.IndError
Dp $PlcFo.ExtInterlock
Di $PlcMain.SafetySwitch.On
Disabled $PlcMain.SafetySwitch
And
And21
Or
Or9
StoDp $PlcMain.IndWarning
Dp $PlcMain.Motor.IndWarning
Show colour in HMI.
Red = Error
Yellow = Warning
Functionobject
Motor Incr/Decr aggregat
Class-BaseMotorIncrDecrAggrFo-Code
W
13-FEB-2006 09:53
Proview
JE
2