Interface "graph" between object and PlcPgm

Class-ABB_ACS800MotorAggFo-Code
W
15-JAN-2008 14:06
Proview
JE
1(5)

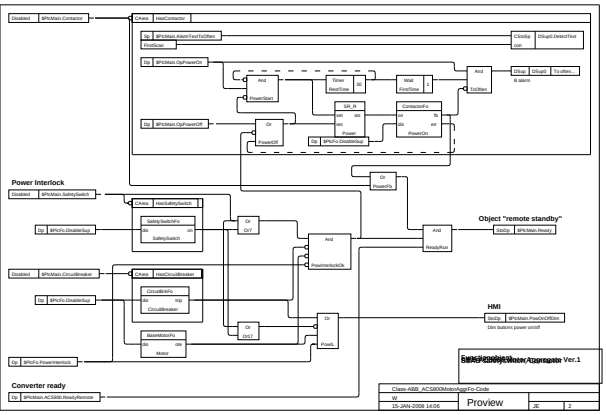

Class-ABB_ACS800MotorAggFo-Code
W
15-JAN-2008 14:06
Proview
JE
2

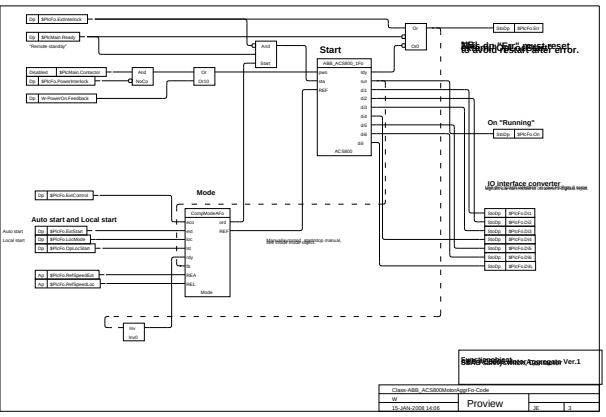

Class-ABB_ACS800MotorAggFo-Code
W
15-JAN-2008 14:06
Proview
JE
3

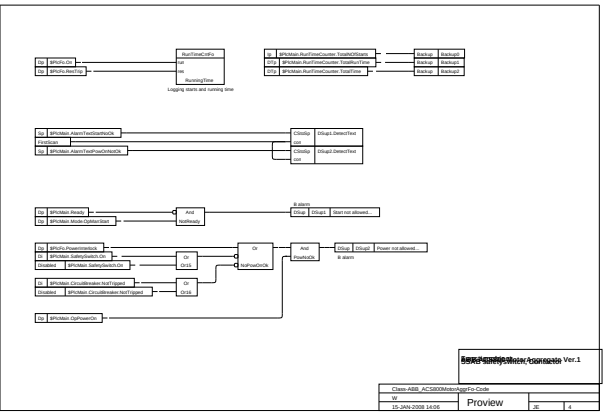

Class-ABB_ACS800MotorAggFo-Code
W
15-JAN-2008 14:06
Proview
JE
4

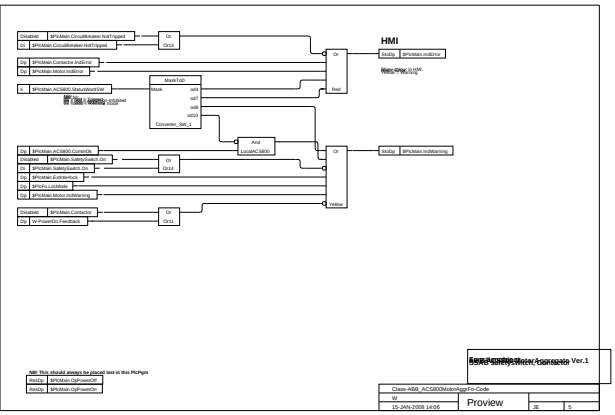

Class-ABB_ACS800MotorAggFo-Code
W
15-JAN-2008 14:06
Proview
JE
5