Interface "graph" between object and PlcPgm

Interface graphnamer

PowerOn := pwo
Start := sta
RefSpeed := REF
ReadyRemote := rdy
Run := run

Functionobject
Fc PPOS
Profibus communication.

Class-BaseFcPPOSFo-Code
W
14-MAR-2008 16:02 **Proview** JE 1(5)

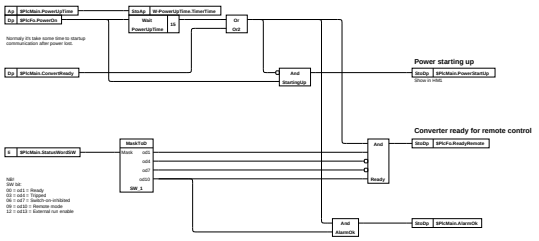

Class-BaseFcPPOSFo-Code
W
14-MAR-2008 16:02 **Proview** JE 2

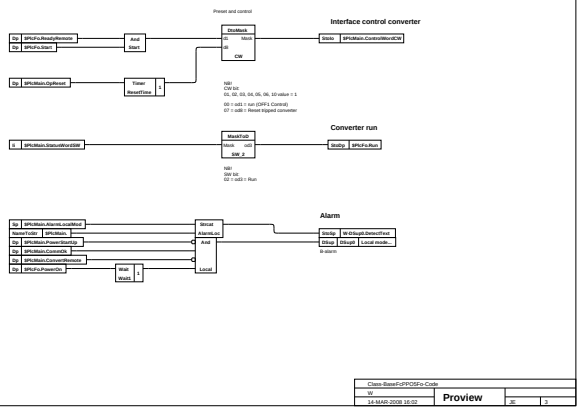

Class-BaseFcPPOSFo-Code
W
14-MAR-2008 16:02 **Proview** JE 3

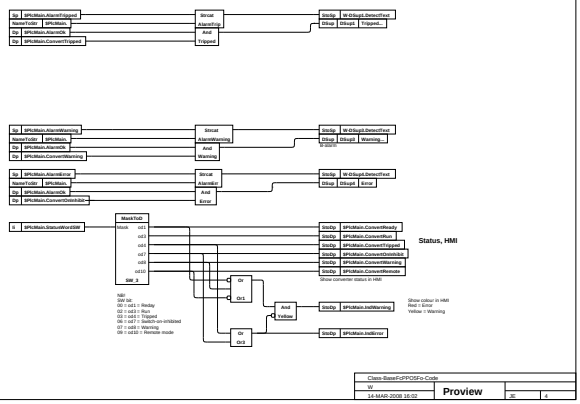

Class-BaseFcPPOSFo-Code
W
14-MAR-2008 16:02 **Proview** JE 4

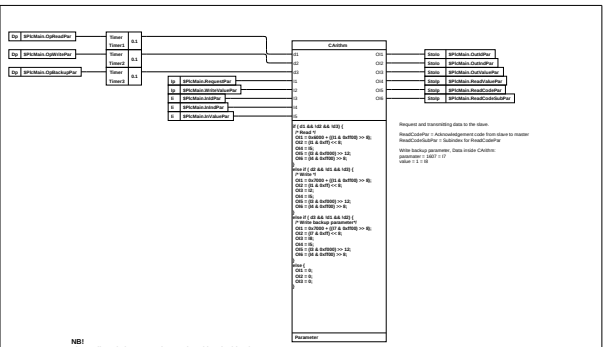

NB!
The attribute below must always placed last in this PlcPgm.

Class-BaseFcPPOSFo-Code
W
14-MAR-2008 16:02 **Proview** JE 5