Interface "graph" between object and PlcPgm

Interface graphname:
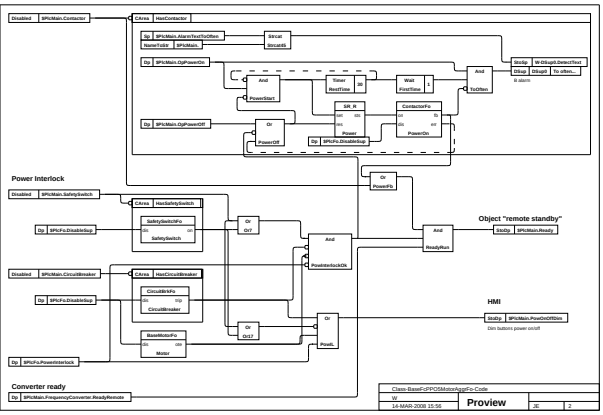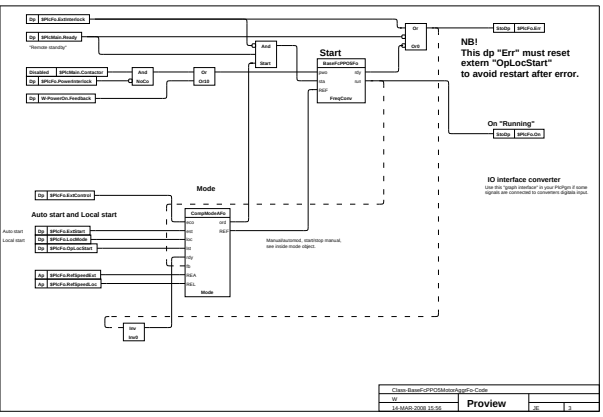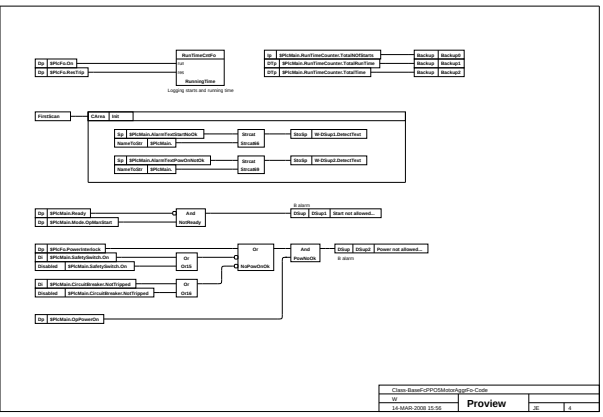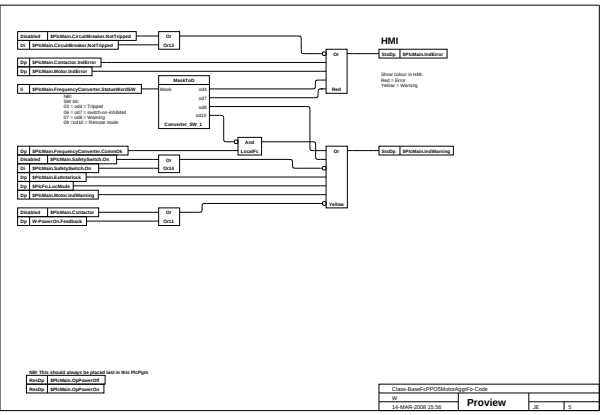
RefSpeedEnl = RLX
RefSpeedLoc = RLO
PowerInterlock = pi
OpPowerOn = pon
OpPowerOff = poff
ExtControl = ecc
ExtStart = est
OpLocStart = ols
LocMode = loc
OpLocStart = lss
RecTrip = rtp