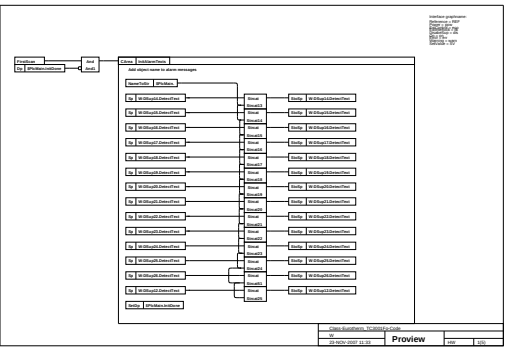

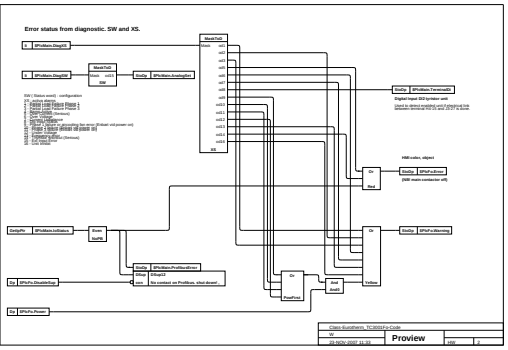

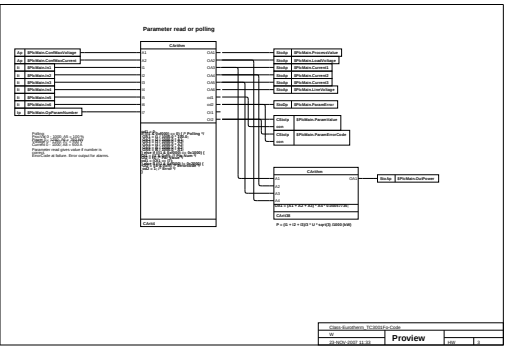

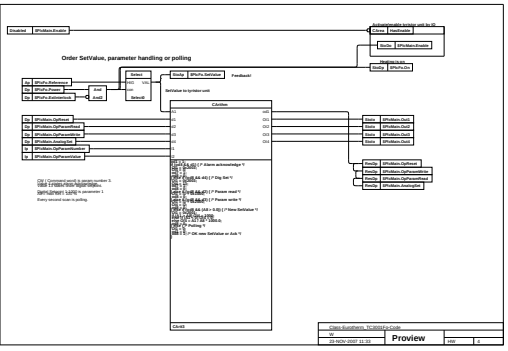
Disabled
SPcMain.Enable
Automatic tyristor unit to 0!
Sinusp
FeedEnable
SinSp
SPcMain.Enable
Manual to 1!
SinSp
SPcFx.Fx
Order SetValue, parameter handling or polling
Select
Sel
Sel1
Sel2
Sel3
Sel4
Sel5
Sel6
Sel7
Sel8
Sel9
Sel10
Sel11
Sel12
Sel13
Sel14
Sel15
Sel16
Sel17
Sel18
Sel19
Sel20
Sel21
Sel22
Sel23
Sel24
Sel25
Sel26
Sel27
Sel28
Sel29
Sel30
Sel31
Sel32
Sel33
Sel34
Sel35
Sel36
Sel37
Sel38
Sel39
Sel40
Sel41
Sel42
Sel43
Sel44
Sel45
Sel46
Sel47
Sel48
Sel49
Sel50
Sel51
Sel52
Sel53
Sel54
Sel55
Sel56
Sel57
Sel58
Sel59
Sel60
Sel61
Sel62
Sel63
Sel64
Ai
SPcFx.Reference
Ai
SPcFx.Power
Ai
SPcFx.ActualValue
And
And1
SinSp
SPcFx.SetValue
Feedback!
SetValue to tyristor unit
CAnSlv
CAnSlt
Sp
SPcMain.OpFeed
Sp
SPcMain.OpFeedFwd
Sp
SPcMain.OpParamIndex
Sp
SPcMain.AnalogOut
Sp
SPcMain.OpParamValue
CAnSlt
CAnSlt
CAnSlt