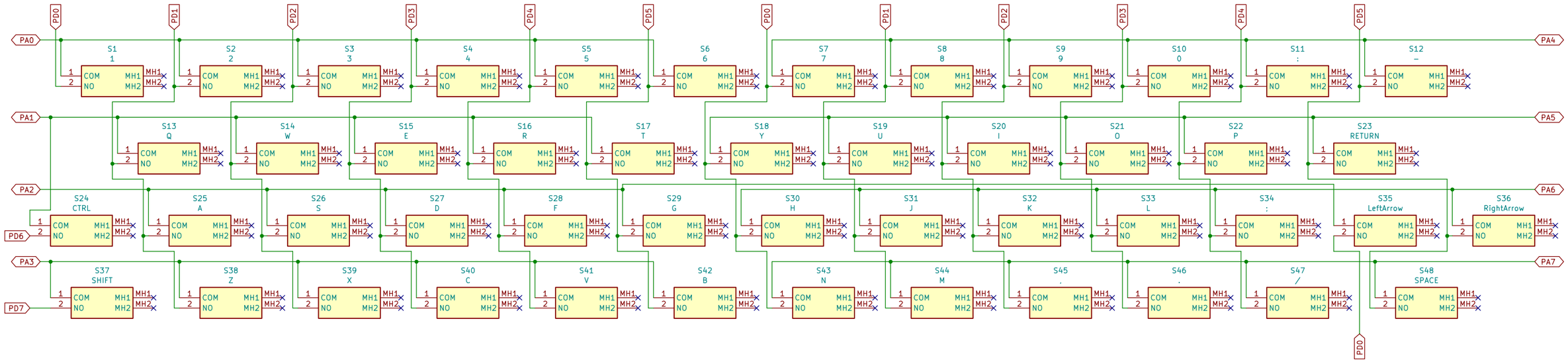

Port	PD0	PD1	PD2	PD3	PD4	PD5	PD6	PD7
PA0	1	2	3	4	5	6		
PA1		Q	W	E	R	T	CTRL	
PA2	Left	A	S	D	F	G		
PA3		Z	X	C	V	B		SHIFT
PA4	7	8	9	0	:	-		
PA5	Y	U	I	O	P	RETURN		
PA6	H	J	K	L	;	Right		
PA7	N	M	,	.	/	SPACE		

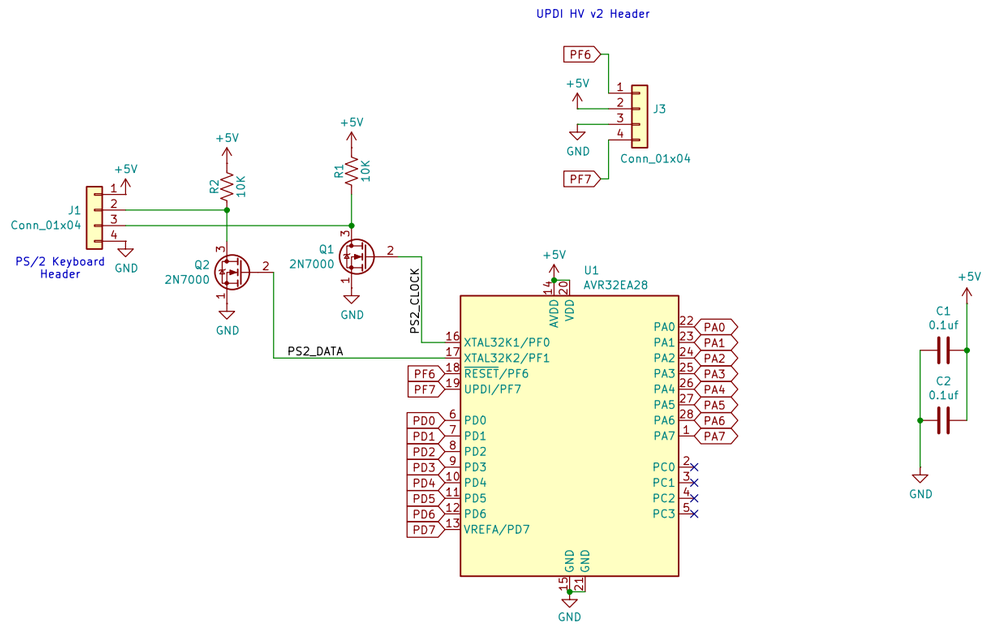

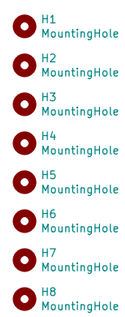

Digicool Things

CreatiVision Keyboard – MX Key switch PS/2 Interfaced

DigicoolThings.com

Sheet: /
File: CreatiVision_Keyboard.kicad_sch

Title: CreatiVision Keyboard – PS/2 Interfaced

Size: A3	Date: 2024-10	Rev: 1.0
KiCad E.D.A. 8.0.5		Id: 1/1