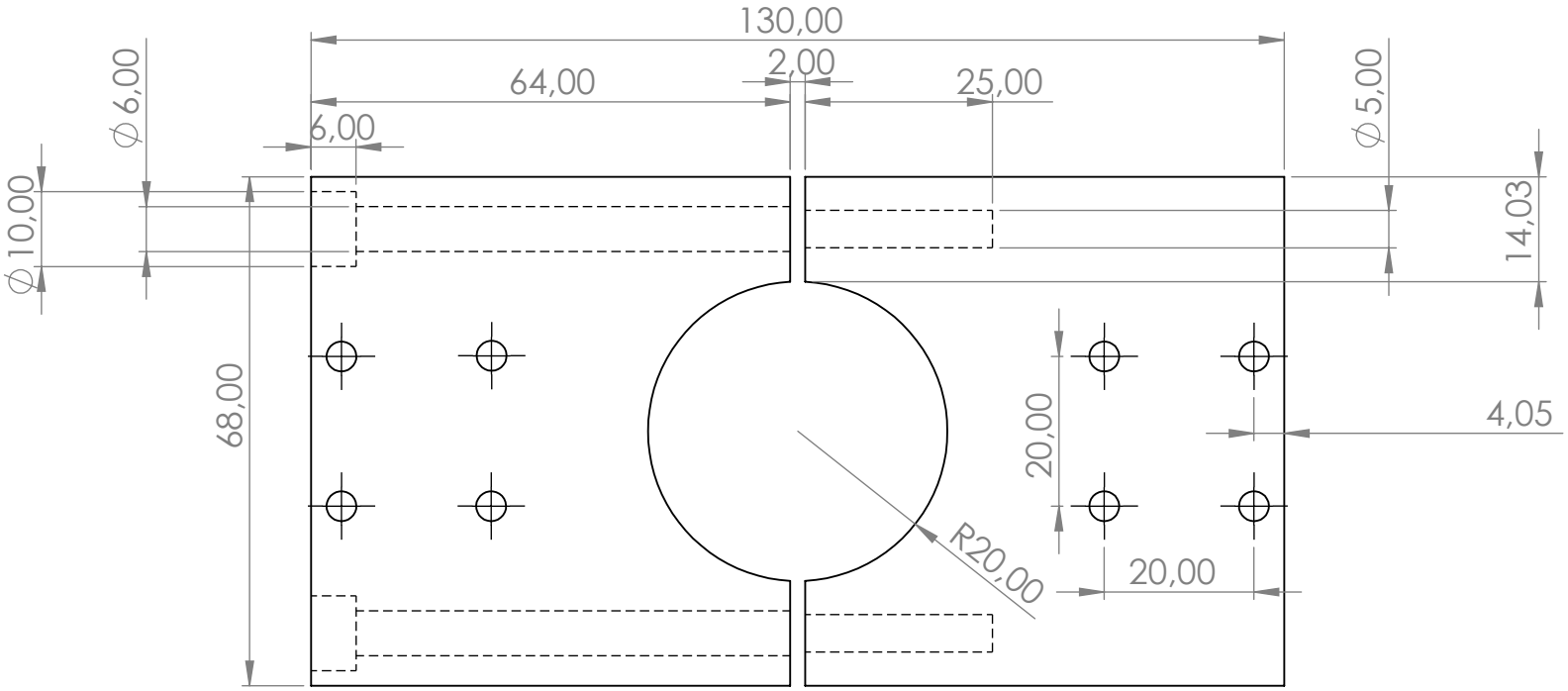

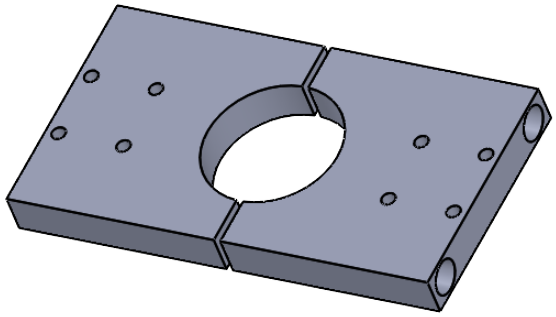

UNLESS OTHERWISE SPECIFIED: DIMENSIONS ARE IN MILLIMETERS SURFACE FINISH: TOLERANCES: LINEAR: ANGULAR:	FINISH:			DEBURR AND BREAK SHARP EDGES	DO NOT SCALE DRAWING	REVISION
					2 pieces. In which outer diameters/M4 holes are identical, but inner locking holes are unique	
	NAME	SIGNATURE	DATE		TITLE:	
DRAWN					custom_clamp_for_sinaptec	
CHK'D						
APPV'D						
MFG						
Q.A				MATERIAL: Aluminium	DWG NO.	A4
				WEIGHT:	SCALE:1:1	SHEET 1 OF 1