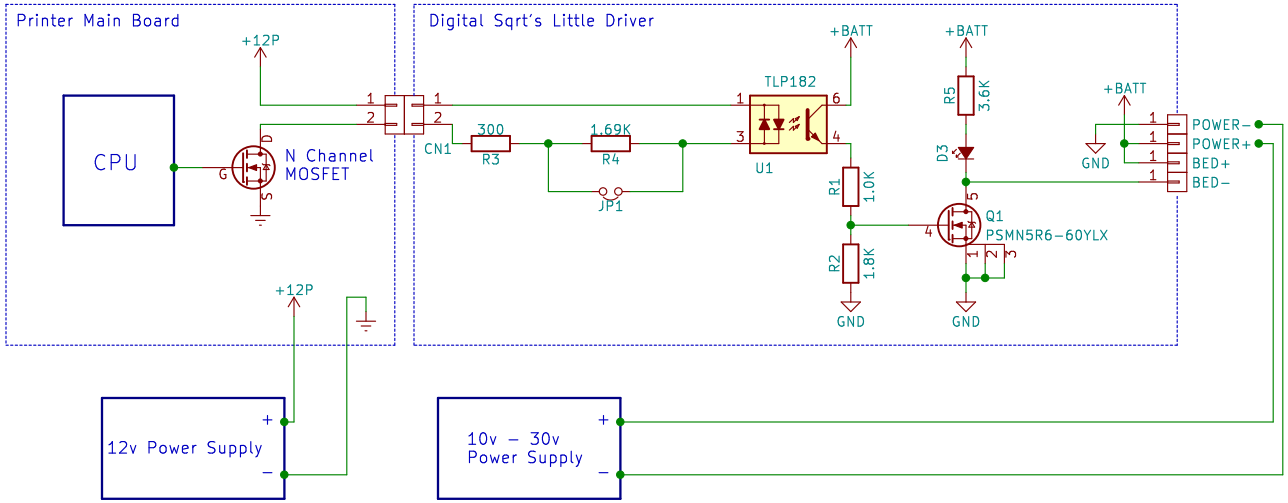
Printer Main Board
+12P
CPU
G
D
S
N Channel
MOSFET
1
2
CN1
Digital Sqrt's Little Driver
300
R3
1.69K
R4
JP1
TLP182
U1
+BATT
R5
3.6K
D3
R1
1.0K
R2
1.8K
GND
Q1
PSMN5R6-60YLX
POWER-
POWER+
BED+
BED-
12v Power Supply
+
-
10v - 30v
Power Supply