◆ DIFFERENT LIST BETWEEN MODEL DCC170 AND DCC175

No.	Page	DCC170	DCC175
1.	19 25	"FACTORY 024D"	"FACTORY 026D"
2.	26 27	"Pins ⑦ to ⑨ of Q501 (DRP)"	"Pins ⑤ to ⑦ of Q501 (DRP)"
3.	29 30	BLOCK DIAGRAM	NEW ATTACH (Page 3, 4)
4.	31 ~ 33	MAIN P.C. BOARD (P503)	NEW ATTACH (Page 5 ~ 7)
5.	35 ~ 52	SCHEMATIC DIAGRAM	NEW ATTACH (Page 9 ~ 26)
6.	58	QU01, μ-com Pin Assignment	NEW ATTACH (Page 30)
7.	62	Q501, DRP Pin Assignment	NEW ATTACH (Page 31)
8.	66	SET MECHANICAL PARTS LIST	NEW ATTACH (Page 32)
9.	70 ~ 76	ELECTRICAL PARTS LIST	NEW ATTACH (Page 33 ~ 39)

Step 4. Signal Line Waveforms Test (See Block Diagram ◇No.◇)

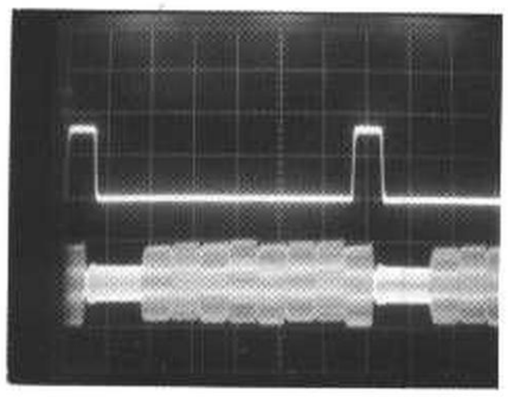

3 RDSYNC (CH1)

1 RDMUX (CH2)

CH1 Y: 0.2V x 10
X: 0.5μs
CH2 Y: 50mV x 10
X: 0.5μs

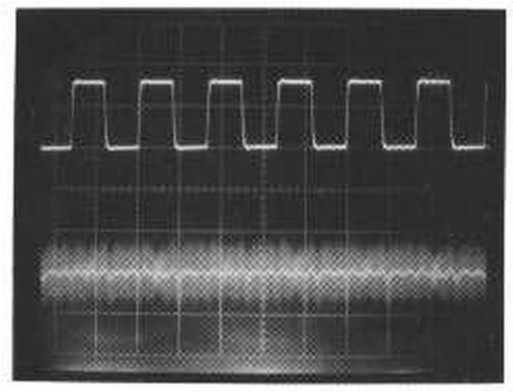

2 RDCLK (CH1)

1 RDMUX (CH2)

CH1 Y: 0.2V x 10
X: 0.2μs
CH2 Y: 50mV x 10
X: 0.2μs

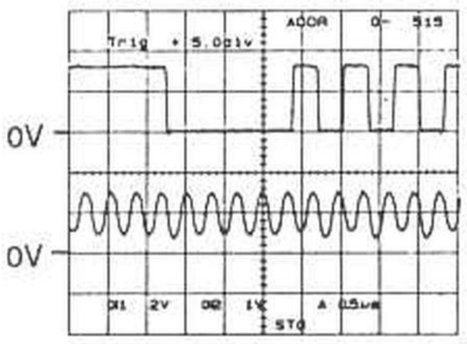

4 AMP O (CH1)

5 WDATA (CH2)

CH1 Y: 2V
X: 0.5μs

CH2 Y: 1V
X: 0.5μs

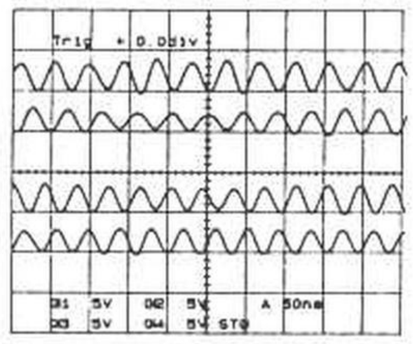

15 X22OUT

16 X22IN

17 X24OUT

18 X24IN

Y: 5V
X: 50ns

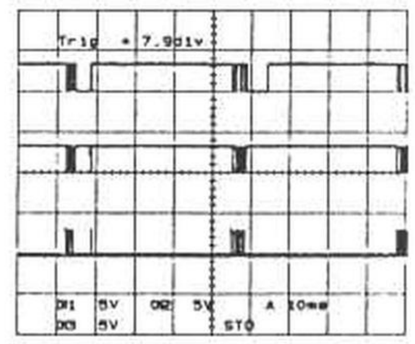

35 L3MODE

33 L3CLK

34 L3DATA

Y: 5V
X: 10ms

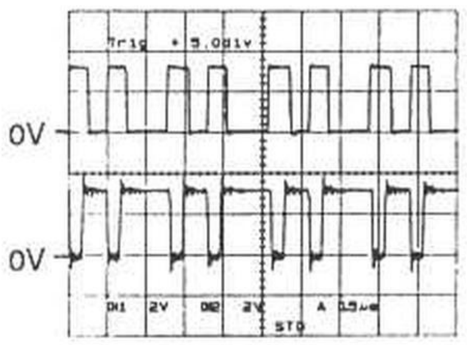

6 WEN

7 OEN

Y: 2V
X: 0.5μs

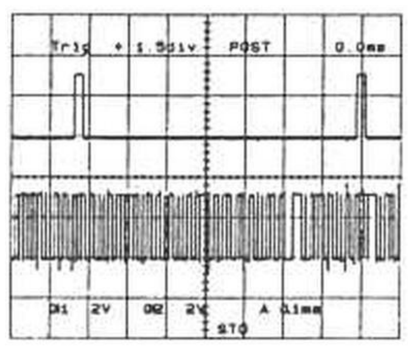

20 FSYNC

19 FDAI

Y: 2V
X: 0.1ms

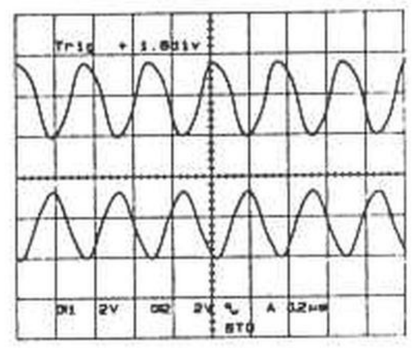

36 X2

37 X1

Y: 2V
X: 0.2μs

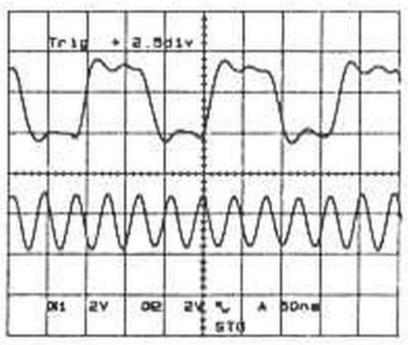

8 MCLK

9 CLK24

Y: 2V
X: 50ns

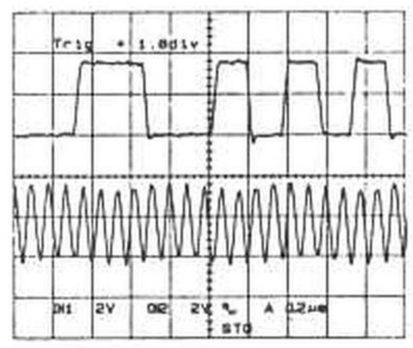

29 OPTOUT

24 FS256

Y: 2V
X: 0.2μs

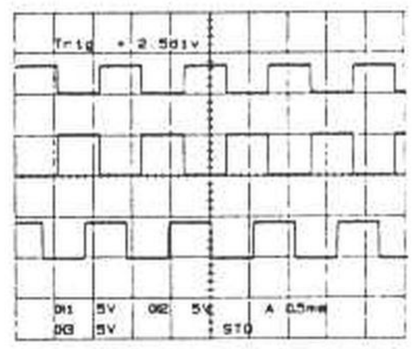

38 F-REF

39 F-REF

40 FGIN/FG

Y: 5V
X: 0.5ms

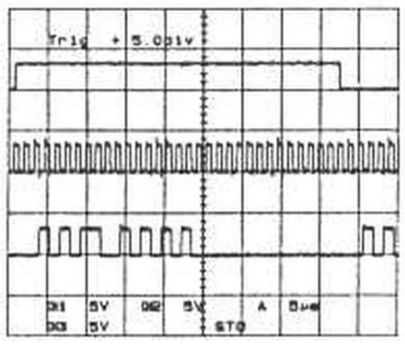

11 SBWS

12 SBCL

13 SBDA

Y: 5V
X: 5μs

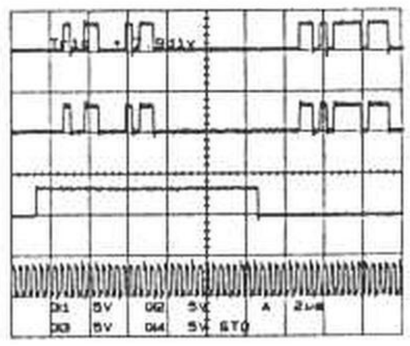

27 SDA2

28 SDA1

25 SWS

26 SCL

Y: 5V
X: 2μs

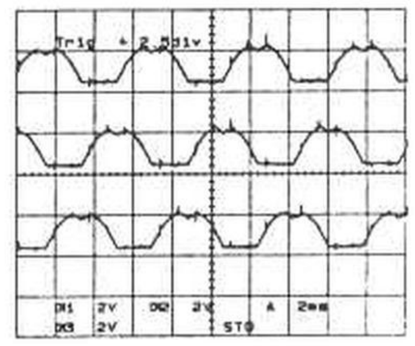

41 W

42 V

43 U

Y: 2V
X: 2ms

BLOCK DIAGRAM

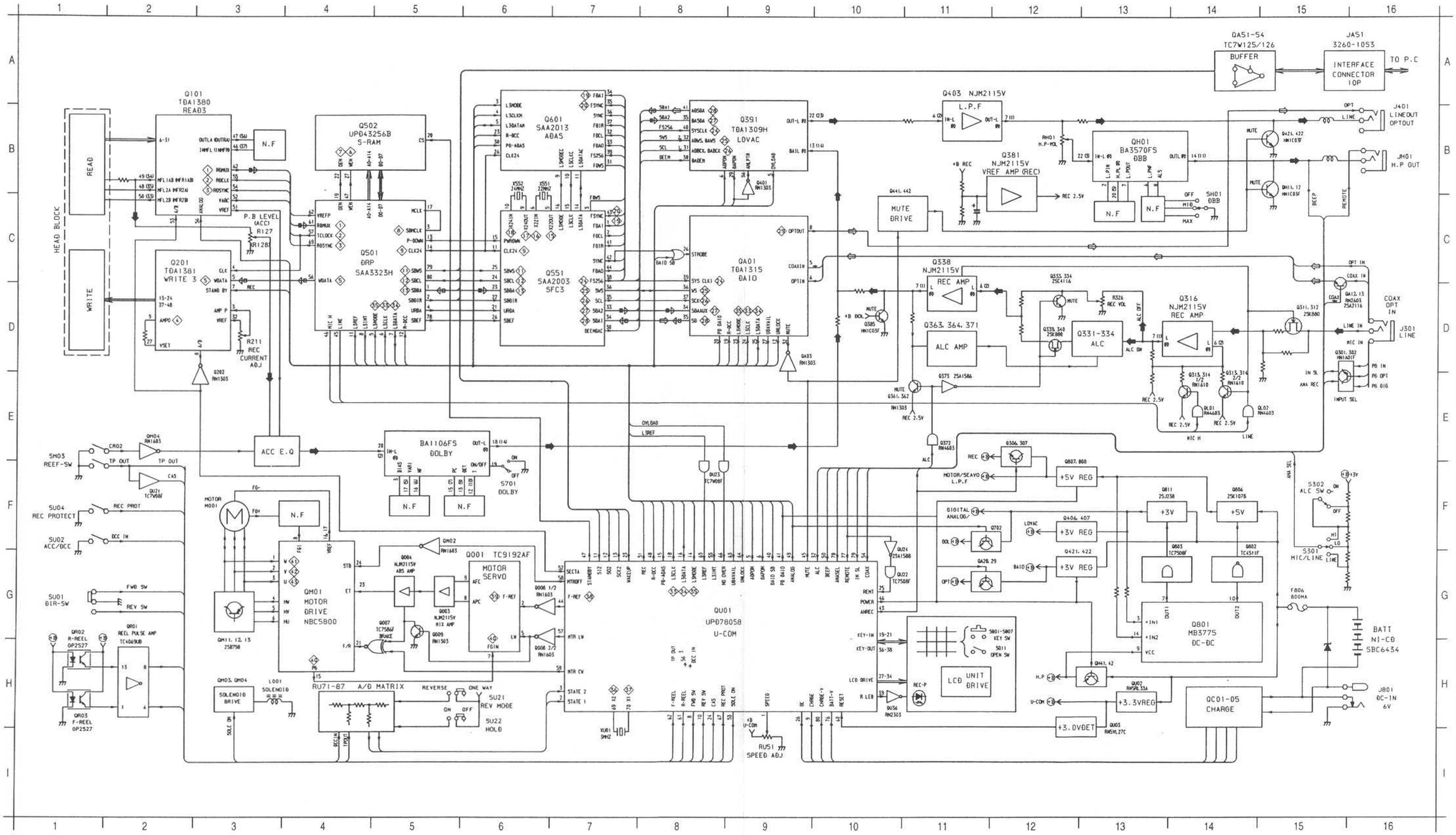

Signal line

- □▷ : DCC REC(WRITE)
- ■▷ : DCC PLAY(READ)
- ⇨ : Digital Audio
- ➡ : Analog Audio(ACC PLAY)

PRINTED CIRCUIT BOARDS DIAGRAM

MAIN P.C. BOARD (P503)

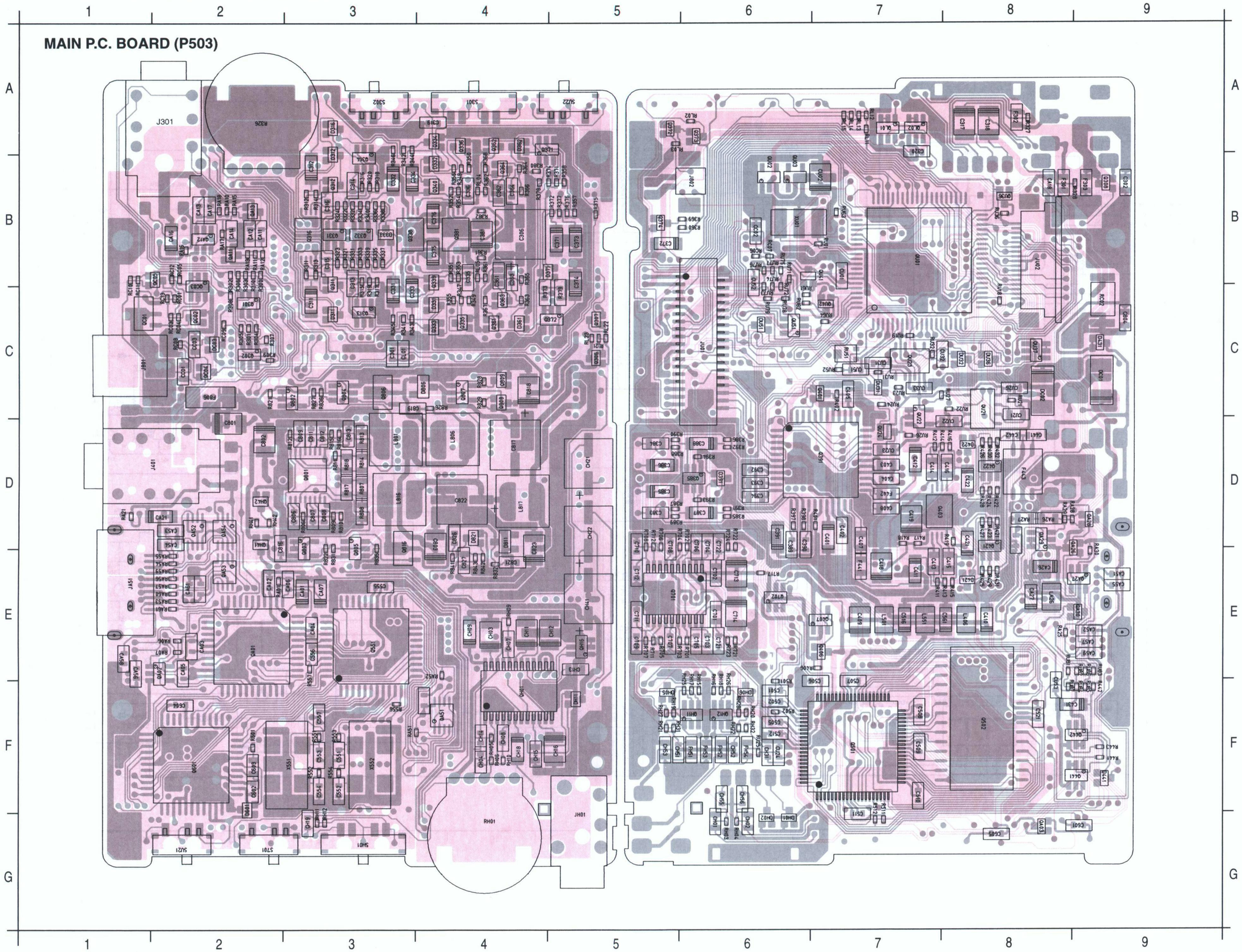

C301	C3	C721	E6	D441	F9	Q808	C4	R363	C4	R832	E4	RU73	C6
C302	B9	C722	E6	D601	F2	Q809	C4	R364	B4	R835	E3	RU74	C6
C306	B4	C801	D2	D806	C4	Q816	E3	R365	B4	R836	C3	RU75	B6
C311	C3	C802	D2	D811	D4	QA01	E2	R366	B4	R841	E4	RU76	B6
C312	B3	C803	D4	D821	D4	QA02	E2	R367	C4	R842	E4	RU77	B6
C313	B3	C804	C9	DC01	D9	QA03	G8	R368	B4	R843	E4	RU78	C6
C314	B3	C806	D3	DC02	C8	QA11	B2	R369	B6	RA01	E2	RU79	C6
C315	B3	C807	D3	DC03	C2	QA12	B2	R371	B5	RA06	E2	RU81	E8
C316	B3	C808	D3	DH01	G6	QA13	B2	R372	B5	RA07	E2	RU82	E9
C317	A8	C809	D3	DH02	G6	QA26	E8	R373	C4	RA10	B2	RU83	E9
C318	A8	C811	D3	DH05	F5	QA27	E9	R374	B4	RA11	B2	RU84	F9
C319	A4	C812	D3	DH06	F6	QA28	D8	R375	B5	RA12	B2	RU85	F9
C320	A7	C816	D2	DH11	F5	QA29	D8	R376	B5	RA13	B2	RU86	E9
C331	C3	C817	D4	DU31	C7	QA30	E9	R377	B5	RA15	B2	RU87	F8
C332	B3	C818	C4	DU32	C8	QA51	F4	R378	B4	RA16	B2		
C333	C3	C819	C3	DU36	C8	QA52	D2	R379	C5	RA17	B2		
C334	B3	C821	E4	DU51	C6	QA53	E2	R380	B4	RA18	B2	S301	A4
C335	B4	C822	D4			QA54	D2	R381	B4	RA21	D1	S302	A3
C336	B4	C823	D4			QC01	C1	R382	B4	RA25	E8	S701	G2
C361	B4	C826	D4	F301	B8	QC02	C2	R385	D6	RA26	D8	SH01	G3
C362	B4	C827	E4	F302	A8	QC03	C2	R386	D6	RA27	D8	SU21	G2
C363	B4	CA01	E3	F303	B9	QC04	C2	R387	D5	RA28	D8	SU22	A5
C364	B4	CA02	E2	F806	C2	QC05	B2	R388	D5	RA29	D8		
C371	B5	CA03	E2	F441	E7	QH01	F4	R389	D5	RA30	E9		
C372	B5	CA04	E3	F442	D7	QH11	F6	R390	D5	RA51	E4	X551	F3
C373	B5	CA05	E2	F443	D8	QH12	F6	R391	D6	RA52	F4	X552	F3
C374	B5	CA06	E3	FH51	F6	QH16	E5	R392	D6	RA53	E2	XU01	B6
C375	B4	CA07	E3	FH52	F6	QH41	D2	R393	D6	RA54	E2		
C376	B4	CA11	B2	FH53	F6	QH42	D2	R394	D6	RA55	E2		
C381	B4	CA12	B2	FH54	F6	QL01	A7	R397	D6	RA56	E2		
C383	D5	CA13	B2			QL02	A7	R398	D6	RA57	E2		
C384	D5	CA14	B2			QU01	B7	R401	D7	RA59	E2		
C385	D5	CA16	B2	J301	A2	QU02	B6	R402	C7	RA60	E2		
C386	D5	CA17	B2	J302	A2	QU03	B6	R406	E7	RA61	E2		
C387	D6	CA18	B8	J401	D1	QU21	C8	R411	E7	RC01	C2		
C388	D6	CA21	E2	J801	C1	QU22	C7	R412	D7	RC02	C9		
C389	D6	CA26	E8	J802	B6	QU23	C7	R413	E8	RC03	C2		
C390	D6	CA27	E8	JA51	E1	QU24	D7	R414	D8	RC04	C2		
C391	D6	CA51	E9	JU01	C6	QU36	B8	R415	E8	RC05	B2		
C392	D6	CA52	E9	JU02	B8	QU37	C8	R416	D8	RC06	B6		
C393	D6	CA53	D2			QU41	B6	R417	D7	RC07	B6		
C394	D6	CA54	D2			QU42	C7	R418	D7	RC08	C2		
C401	D7	CA55	E9	L406	E8			R419	D8	RC09	C2		
C402	D7	CA56	E1	L501	E7			R421	D8	RC10	B1		
C403	D7	CA57	E9	L551	E7	R300	B2	R422	D8	RC11	B1		
C404	D7	CA58	E1	L801	D3	R301	C2	R423	D8	RC12	B2		
C405	C7	CA59	E9	L806	D4	R302	B2	R424	D8	RC13	C2		
C407	D7	CA61	E2	L816	D3	R303	B2	R425	E8	RH03	G6		
C408	D7	CC01	C2	L817	D4	R304	C2	R426	C8	RH04	G6		
C409	E7	CC02	B6	LA26	E8	R305	C2	R427	D8	RH05	F4		
C410	E8	CC03	C2			R306	B2	R428	D8	RH06	F4		
C411	D7	CH01	G6			R307	C2	R429	E8	RH09	E4		
C412	D7	CH02	G6	Q301	C2	R308	C2	R430	D8	RH10	F4		
C413	E8	CH03	E4	Q302	C2	R309	C2	R431	E8	RH11	G3		
C414	D7	CH04	F4	Q306	C5	R310	B2	R432	D8	RH12	G3		
C415	E8	CH07	E4	Q307	C5	R311	B3	R441	F9	RH15	F6		
C416	D8	CH08	F4	Q308	B9	R312	B3	R442	E9	RH16	F6		
C418	E8	CH09	F4	Q311	B3	R313	B3	R443	F9	RH17	F6		
C419	D7	CH11	E4	Q312	B3	R314	B3	R501	F6	RH18	F6		
C421	D8	CH12	E5	Q313	C3	R315	B3	R502	F6	RH19	F5		
C422	D8	CH13	E5	Q314	B3	R316	B3	R511	G7	RH20	F6		
C431	F7	CH14	F4	Q316	B3	R317	B3	R512	G7	RH21	F5		
C441	D8	CH15	F4	Q331	B3	R318	B3	R551	F3	RH22	F6		
C442	D8	CH16	F5	Q332	B3	R319	B3	R552	F3	RH25	F6		
C501	F6	CH18	F4	Q333	C4	R320	B3	R553	F3	RH26	F6		
C502	F6	CH19	G3	Q334	A4	R321	B3	R554	F3	RH27	F5		
C505	F6	CH21	D5	Q335	C4	R322	B3	R556	F3	RH28	F6		
C506	F7	CH22	D5	Q336	A4	R323	B3	R557	E3	RH31	F5		
C507	F7	CH31	F6	Q338	B3	R324	B3	R601	F2	RH32	F6		
C508	F7	CH41	E5	Q339	B4	R326	A2	R701	E6	RH41	D2		
C509	F7	CH51	F5	Q340	B4	R327	A8	R703	E5	RH42	D2		
C510	F7	CH52	F6	Q361	C4	R328	B9	R705	E5	RL02	A6		
C511	G7	CH53	F5	Q362	A4	R331	B3	R706	D5	RL03	A5		
C512	F6	CL01	C3	Q363	C4	R332	B3	R707	E5	RL04	B4		
C516	E7	CU01	B7	Q364	B4	R333	B3	R708	D5	RL05	B4		
C521	F8	CU02	B7	Q371	A4	R334	B3	R711	E5	RL11	A7		
C551	F3	CU21	C8	Q372	C5	R335	B3	R712	D5	RL12	A7		
C552	F3	CU22	D8	Q373	A6	R336	B3	R717	E6	RL13	A7		
C553	F3	CU23	C7	Q374	B5	R337	B3	R721	E6	RL14	A7		
C554	F3	CU24	F6	Q381	B4	R338	B3	R722	E6	RL15	A7		
C555	E3	CU26	C8	Q385	D6	R339	B3	R723	E6	RL21	C5		
C556	E3	CU31	C7	Q391	D7	R340	B3	R724	E6	RL22	C5		
C557	F3	CU32	C7	Q401	C7	R341	C3	R726	E6	RL23	C5		
C561	E8	CU33	C7	Q403	D7	R342	A3	R806	D3	RU01	B7		
C601	G9	CU51	C7	Q406	E7	R343	C3	R807	D3	RU18	C8		
C602	F2	CU52	C6	Q407	E7	R344	A3	R808	D3	RU19	C7		
C603	F2	CU53	F8	Q421	D8	R345	C3	R809	D3	RU21	C8		
C604	F2			Q422	D8	R346	A3	R810	D3	RU22	C8		
C605	G8			Q441	F9	R347	C4	R811	D2	RU23	C7		
C701	E6	D311	C3	Q442	F9	R348	B4	R812	D3	RU24	C7		
C702	E6	D312	A3	Q501	F7	R349	C4	R813	D3	RU25	F6		
C703	E6	D316	A3	Q502	F8	R350	B4	R814	D3	RU26	D7		
C704	E6	D331	C4	Q551	E3	R351	B4	R815	D3	RU27	C7		
C705	E6	D332	B4	Q601	F2	R352	B4	R816	D3	RU31	C7		
C706	E6	D333	B3	Q701	E6	R353	B4	R817	D3	RU32	C7		
C707	E5	D361	C4	Q702	E6	R354	B4	R818	D3	RU36	B8		
C708	D5	D362	A4	Q801	D3	R355	C4	R821	C2	RU51	C7		
C709	E5	D371	B4	Q802	C3	R356	B4	R822	E3	RU52	C7		
C710	D5	D372	A5	Q803	D3	R357	B5	R826	C4	RU54	C7		
C711	E5	D391	D6	Q804	C3	R358	B5	R827	C3	RU61	C6		
C712	E5	D421	E8	Q805	D3	R360	B6	R828	C4	RU62	C6		
C713	E6	D422	D8	Q806	C3	R361	B4	R829	C4	RU71	B6		
C714	E6	D431	C9	Q807	C4	R362	B4	R831	E3	RU72	C6		

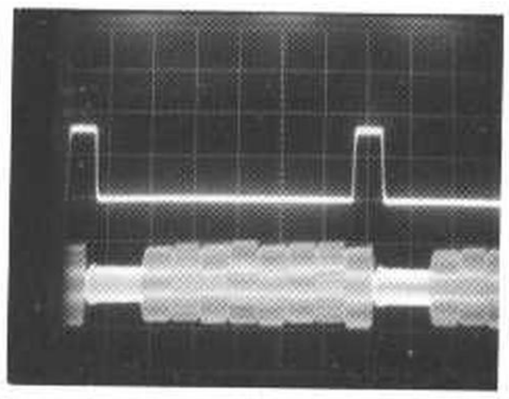

3 RDSYNC (CH1)

1 RDMUX (CH2)

CH1 Y: 0.2V x 10
X: 0.5μs
CH2 Y: 50mV x 10
X: 0.5μs

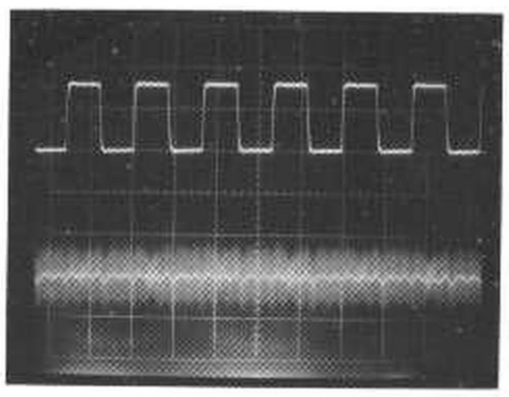

2 RDCLK (CH1)

1 RDMUX (CH2)

CH1 Y: 0.2V x 10
X: 0.5μs
CH2 Y: 50mV x 10
X: 0.5μs

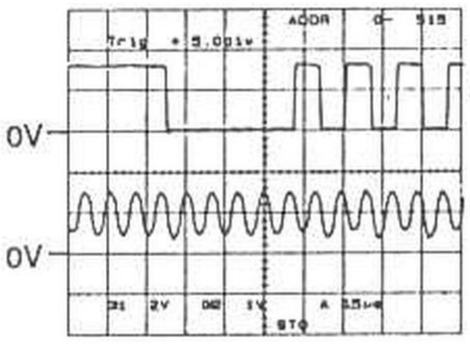

4 AMP O(CH1)

5 WDATA (CH2)

CH1 Y: 2V
X: 0.5μs

CH2 Y: 1V
X: 0.5μs

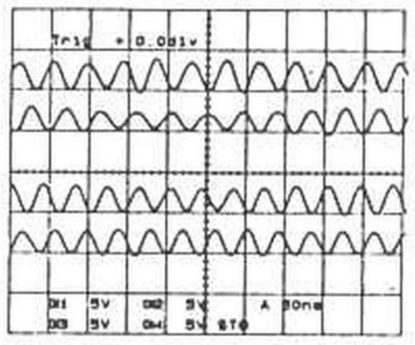

15 X22OUT

16 X22IN

17 X24OUT

18 X24IN

Y: 5V
X: 50ns

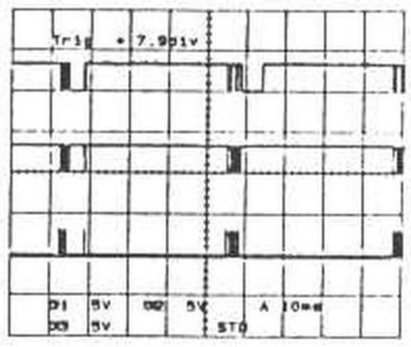

35 L3MODE

33 L3CLK

34 L3DATA

Y: 5V
X: 10ms

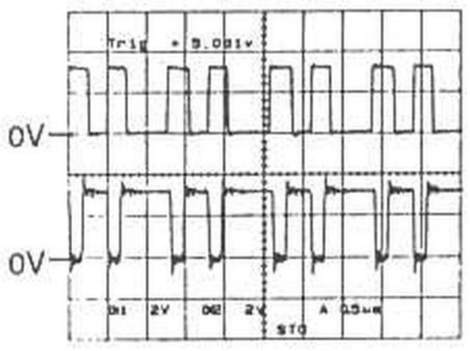

6 WEN

7 OEN

Y: 2V
X: 0.5μs

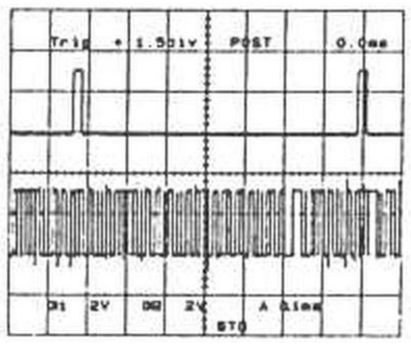

20 FSYNC

19 FDAI

Y: 2V
X: 0.1ms

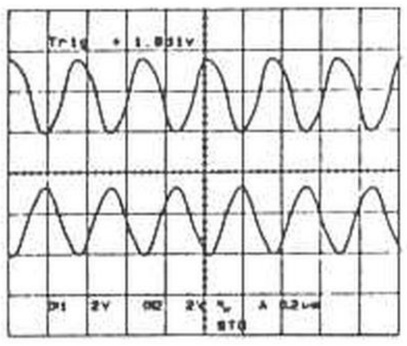

36 X2

37 X1

Y: 2V
X: 0.2μs

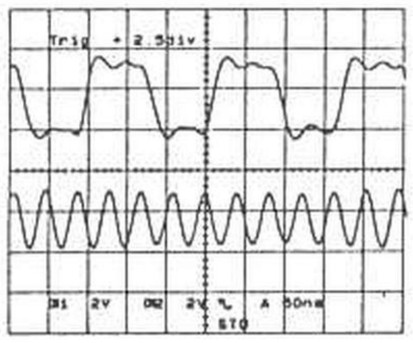

8 MCLK

9 CLK24

Y: 2V
X: 50ns

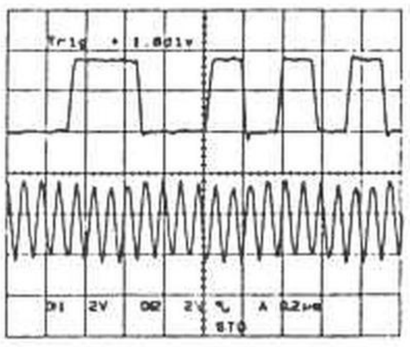

29 OPTOUT

24 FS256

Y: 2V
X: 0.2μs

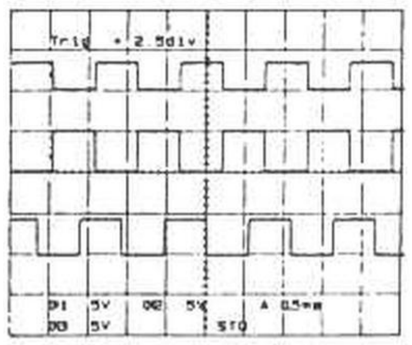

38 F-REF

39 F-REF

40 FGIN/FG

Y: 5V
X: 0.5ms

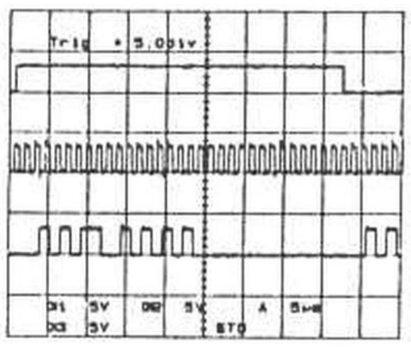

11 SBWS

12 SBCL

13 SBDA

Y: 5V
X: 5μs

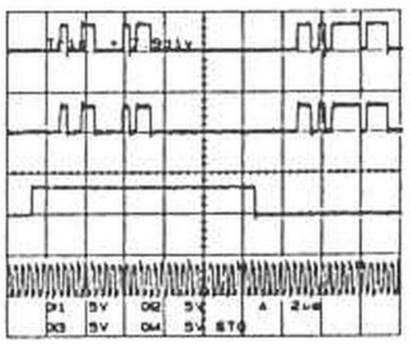

27 SDA2

28 SDA1

25 XL

26 SWS

Y: 5V
X: 2μs

Signal line

□▷ : DCC REC(WRITE)

■▷ : DCC PLAY(READ)

⇨ : Digital Audio

➡ : Analog Audio(ACC PLAY)

No mark : STOP

▭ : ACC PLAY

( ) : DCC PLAY

(( )) : DCC REC

SCHEMATIC DIAGRAM

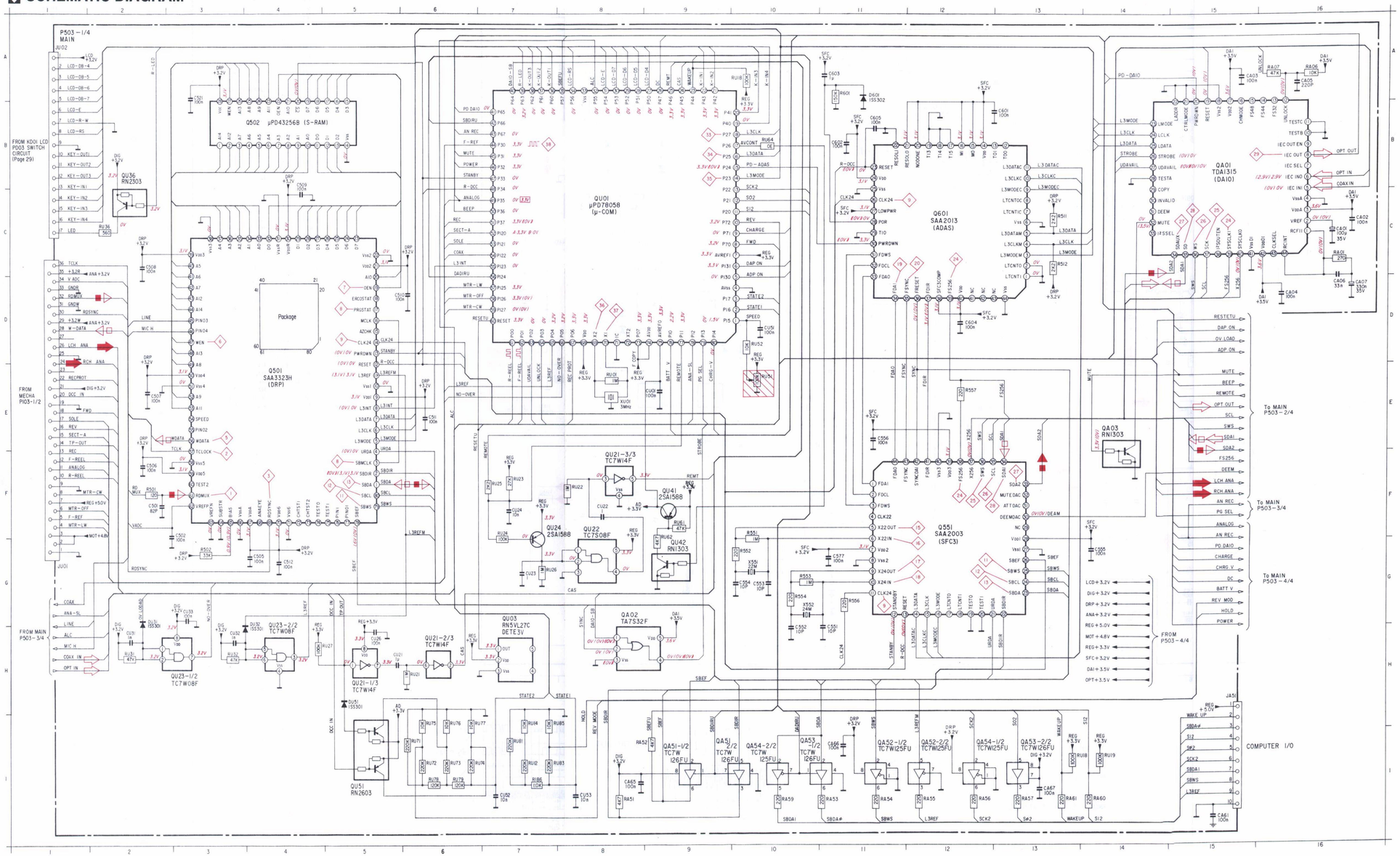

C501	F2	JU02-12	B1	X551	G10
C502	F3	JU02-13	B1	X552	G10
C505	G4	JU02-14	C1	XU01	E8
C506	F2	JU02-15	C1		
C507	E2	JU02-16	C1		
C508	C2	JU02-17	C1		
C509	C4	JU02-2	A1		
C510	D6	JU02-3	A1		
C511	E6	JU02-4	A1		
C512	G4	JU02-5	A1		
C521	A3	JU02-6	B1		
C551	G11	JU02-7	B1		
C552	G10	JU02-8	B1		
C553	G10	JU02-9	B1		
C554	G10				
C555	G14				
C556	E11	Q501	E4		
C577	G11	Q502	B4		
C601	B13	Q551	F12		
C602	B11	Q601	C12		
C603	A11	QA01	B15		
C604	D12	QA02	H8		
C605	B11	QA03	E14		
CA01	C16	QA51-1/2	I9		
CA02	C16	QA51-2/2	I10		
CA03	A15	QA52-1/2	I11		
CA04	D16	QA52-2/2	I12		
CA05	A16	QA53-1/2	I11		
CA06	C16	QA53-2/2	I13		
CA07	D16	QA54-1/2	I12		
CA61	I15	QA54-2/2	I10		
CA65	I8	QU03	H7		
CA66	I11	QU08	C8		
CA67	I13	QU21	F8		
CU01	E9	QU21	H5		
CU21	H5	QU21	H6		
CU22	F8	QU22	G8		
CU23	G7	QU23	H3		
CU24	F7	QU23	H4		
CU26	H5	QU24	F7		
CU31	H2	QU36	C2		
CU32	H3	QU41	F9		
CU33	G3	QU42	G9		
CU51	D10	QU51	I5		
CU52	I7				
CU53	I8				
		R501	F2		
		R502	G3		
D601	A11	R511	C13		
DU31	H2	R512	C13		
DU32	H4	R551	F10		
DU51	H5	R552	G10		
		R553	G10		
		R554	G10		
JA51-1	H15	R556	G11		
JA51-2	H15	R557	E12		
JA51-3	H15	R601	A11		
JA51-4	I15	RA01	C16		
JA51-5	I15	RA06	A16		
JA51-6	I15	RA07	A16		
JA51-7	I15	RA51	I8		
JA51-8	I15	RA52	I9		
JA51-9	I15	RA53	I11		
JA51-10	I15	RA54	I11		
JU01-1	G1	RA55	I12		
JU01-10	F1	RA56	I12		
JU01-11	F1	RA57	I13		
JU01-12	F1	RA59	I10		
JU01-13	F1	RA60	I14		
JU01-14	E1	RA61	I13		
JU01-15	E1	RU01	E8		
JU01-16	E1	RU18	I13		
JU01-17	E1	RU19	I14		
JU01-18	E1	RU21	H6		
JU01-19	E1	RU22	F8		
JU01-2	G1	RU23	F7		
JU01-20	E1	RU24	F7		
JU01-21	E1	RU25	F7		
JU01-22	E1	RU26	G7		
JU01-23	E1	RU27	H4		
JU01-24	D1	RU31	H2		
JU01-25	D1	RU32	H3		
JU01-26	D1	RU36	C2		
JU01-27	D1	RU51	E10		
JU01-28	D1	RU52	D10		
JU01-29	D1	RU54	D10		
JU01-3	F1	RU61	F9		
JU01-30	D1	RU62	F9		
JU01-31	D1	RU71	I6		
JU01-32	D1	RU72	I6		
JU01-33	D1	RU73	I6		
JU01-34	D1	RU74	I6		
JU01-35	C1	RU75	I6		
JU01-36	C1	RU76	I6		
JU01-4	F1	RU77	I6		
JU01-5	F1	RU78	I6		
JU01-6	F1	RU79	I6		
JU01-7	F1	RU81	I7		
JU01-8	F1	RU82	I7		
JU01-9	F1	RU83	I7		
JU02-1	A1	RU84	I7		
JU02-10	B1	RU85	I7		
JU02-11	B1	RU86	I7		

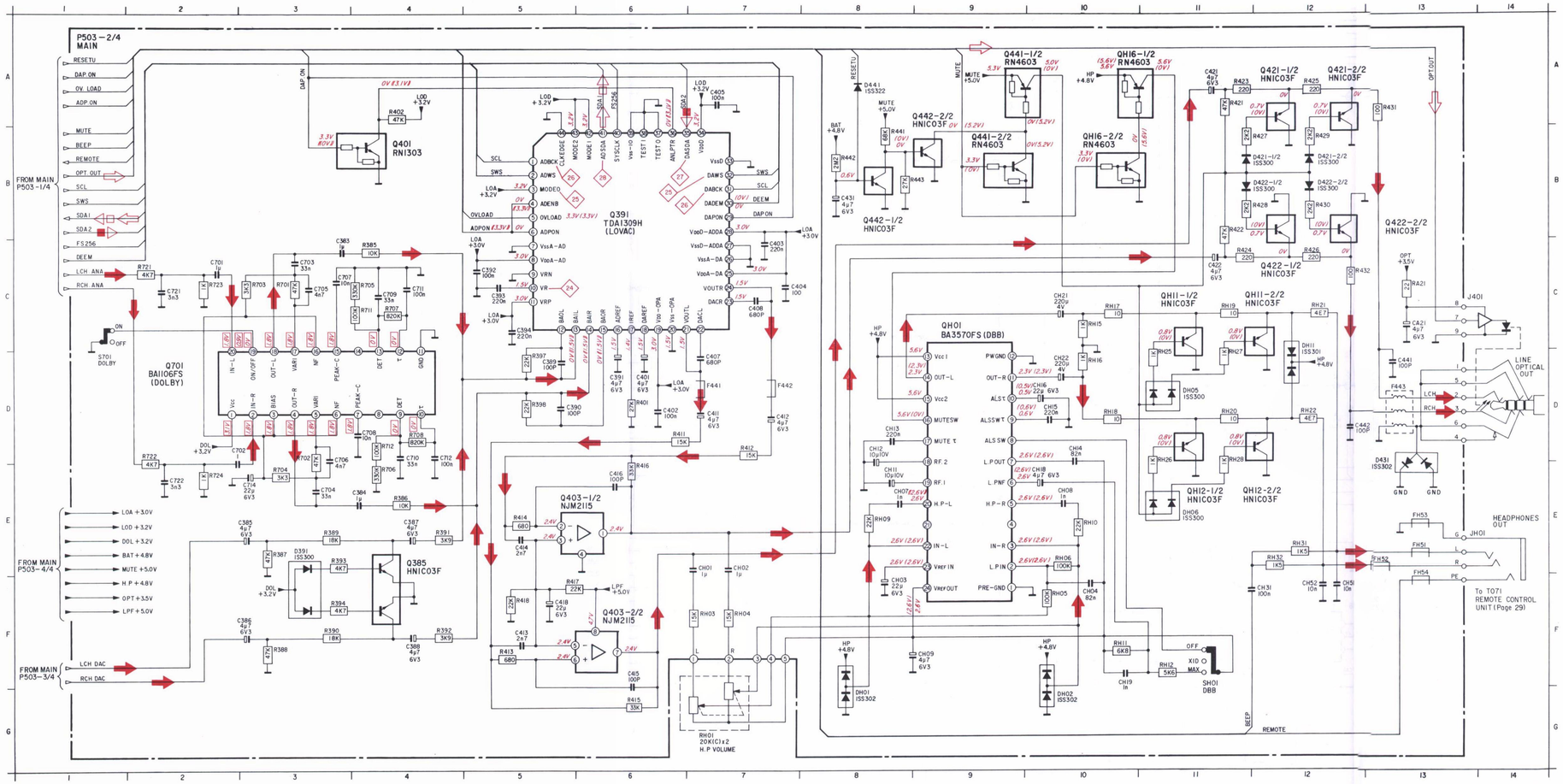

Signal line

- □▷ : DCC REC(WRITE)
- ■▷ : DCC PLAY(READ)
- ⇨ : Digital Audio
- ➡ : Analog Audio(ACC PLAY)

No mark : STOP

- ▭ : ACC PLAY
- ( ) : DCC PLAY
- (( )) : DCC REC

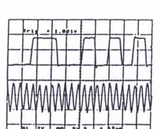

29 OPTOUT

24 FS256

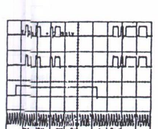

27 SDA2

28 SDA1

25 XL

26 SWS

C383	C3	Q385	E4	C301	C3	Q381-1/2	D5
C384	E4	Q391	B6	C302	D1	Q381-2/2	E5
C385	E3	Q401	B4	C311	D3	QA11	E2
C386	F3	Q403-1/2	E6	C312	B3	QA12	D3
C387	E4	Q403-2/2	F6	C313	C4	QA12-1/2	D2
C388	F4	Q421-1/2	A12	C314	B4	QA13	D3
C389	D5	Q421-2/2	A12	C315	C6	QL01-1/2	D4
C390	D5	Q422-1/2	B12	C316	B6	QL01-2/2	E4
C391	D6	Q422-2/2	B12	C317	C7	QL02-1/2	F4
C392	C5	Q441-1/2	A9	C318	A7	QL02-2/2	F4
C393	C5	Q441-2/2	B9	C319	D4		
C394	C5	Q442-1/2	B8	C320	D4		
C401	D6	Q442-2/2	B9	C331	C8	R300	C3
C402	D6	Q701	D3	C332	A8	R301	B2
C403	C7	QH01	D9	C333	B8	R302	B2
C404	C7	QH11-1/2	C11	C334	A8	R303	B2
C405	A7	QH11-2/2	C12	C335	C10	R304	B2
C407	D7	QH12-1/2	D11	C336	B10	R305	B2
C408	C7	QH12-2/2	D12	C361	E10	R306	B3
C411	D7	QH16-1/2	A10	C362	F11	R307	A2
C412	D7	QH16-2/2	B10	C363	E10	R308	B2
C413	F5			C364	F10	R309	A3
C414	E5			C371	F9	R310	A3
C415	F6	R385	C4	C372	E8	R311	B4
C416	E6	R386	E4	C373	E6	R312	A3
C418	F5	R387	E3	C374	G8	R313	C4
C421	A11	R388	F3	C375	E6	R314	A3
C422	C11	R389	E3	C376	E6	R315	C4
C441	D13	R390	F3	C381	F5	R316	B4
C442	D12	R391	E4	CA11	D2	R317	C5
C701	C2	R392	F4	CA12	D3	R318	B5
C702	D2	R393	E3	CA13	E4	R319	C5
C703	C3	R394	F3	CA14	E3	R320	B5
C704	E3	R397	D5	CA16	E2	R321	C6
C705	C3	R398	D5	CA17	E4	R322	B6
C706	D3	R401	D6	CA18	F1	R323	C6
C707	C3	R402	A4	CL01	G2	R324	B6
C708	D4	R411	D6			R326	D6
C709	C4	R412	D7			R327	D3
C710	D4	R413	F5	D311	C4	R328	D3
C711	C4	R414	E5	D312	B4	R331	C7
C712	D4	R415	G6	D316	D5	R332	A7
C714	E3	R416	E6	D331	C8	R333	C7
C721	C2	R417	F5	D332	B8	R334	B7
C722	E2	R418	F5	D333-1/2	E6	R335	E7
CA21	C13	R421	A11	D333-2/2	E6	R336	E7
CH01	E7	R422	B11	D361	E10	R337	E6
CH02	E7	R423	A11	D362	F10	R338	F6
CH03	F8	R424	C11	D371	F7	R339	C8
CH04	F10	R425	A12	D372	G7	R340	A8
CH07	E8	R426	C12			R341	B8
CH08	E10	R427	B11			R342	A8
CH09	F9	R428	B11	F301	C3	R343	B8
CH11	E8	R429	B12	F302	C2	R344	A8
CH12	D8	R430	B12	F303	D2	R345	C9
CH13	D8	R431	A13			R346	B9
CH14	D10	R432	C12			R347	C9
CH15	D10	R441	B8	J301-1	C3	R348	B9
CH16	D10	R442	B8	J301-2	D1	R349	C9
CH18	E10	R443	B8	J301-3	C1	R350	B9
CH19	F10	R701	C3	J301-4	D1	R351	C10
CH21	C10	R702	D3	J301-5	C1	R352	B10
CH22	D10	R703	C3	J301-6	D1	R353	C10
CH31	F12	R704	E3	J301-7	E1	R354	B10
CH51	F12	R705	C4	J301-8	F1	R355	C8
CH52	F12	R706	E4	J301-9	E1	R356	B8
		R707	C4			R357	G8
		R708	D4			R358	G8
D391	E3	R711	C4	Q301-1/2	B3	R360	E9
D421	B11	R712	D4	Q301-2/2	B2	R361	C11
D421-2/2	B12	R721	C2	Q302-1/2	A3	R362	C11
D422-1/2	B11	R722	D2	Q302-2/2	A2	R363	E10
D422-2/2	B12	R723	C2	Q308	C2	R364	F10
D431	D13	R724	E2	Q311	C4	R365	E10
DH01	G9	RA21	C13	Q312	B4	R366	F10
DH02	G10	RH01	G7	Q313-1/2	C5	R367	E10
DH05	D11	RH03	F7	Q313-2/2	C5	R368	F10
DH06	E11	RH04	F7	Q314-1/2	B5	R369	E9
		RH05	F10	Q314-2/2	B5	R371	F9
		RH06	E10	Q316-1/2	A6	R372	F9
F441	D7	RH09	E8	Q316-2/2	B6	R373	E8
F442	D7	RH10	E10	Q331-1/2	E7	R374	F8
F443	D13	RH11	F10	Q331-2/2	E7	R375	G7
FH51	E13	RH12	F11	Q332-1/2	E6	R376	E6
FH52	E13	RH15	C10	Q332-2/2	F6	R377	F7
FH53	E13	RH16	D10	Q333	C8	R378	E9
FH54	F13	RH17	C10	Q334	B8	R379	E8
		RH18	D10	Q335	C9	R380	E9
		RH19	C11	Q336	B9	R381	D5
J401-1	D13	RH20	D11	Q338-1/2	A10	R382	F5
J401-2	D13	RH21	C12	Q338-2/2	C10	RA10	D4
J401-3	D13	RH22	D12	Q339	C8	RA11	D2
J401-4	D13	RH25	D11	Q340	A8	RA12	D2
J401-5	D13	RH26	E11	Q361	D10	RA13	D1
J401-6	D13	RH27	D11	Q362	D9	RA15	E3
J401-7	C13	RH28	E11	Q363	E10	RA16	E2
J401-8	C13	RH31	E12	Q364	F10	RA17	E3
J401-9	C13	RH32	E12	Q371-1/2	F9	RA18	E4
JH01-G	E13			Q371-2/2	G8	RL02	F7
JH01-L	E13	S701	C1	Q372-1/2	F6	RL03	G7
JH01-PE	F13	SH01	F11	Q372-2/2	G6	RL04	D8
JH01-R	E13			Q373	F6	RL05	D8
				Q374	E8	RL11	F3

RL12	F3		
RL13	F3		
RL14	F3		
RL15	F2		
S301	G2		
S302	G3		

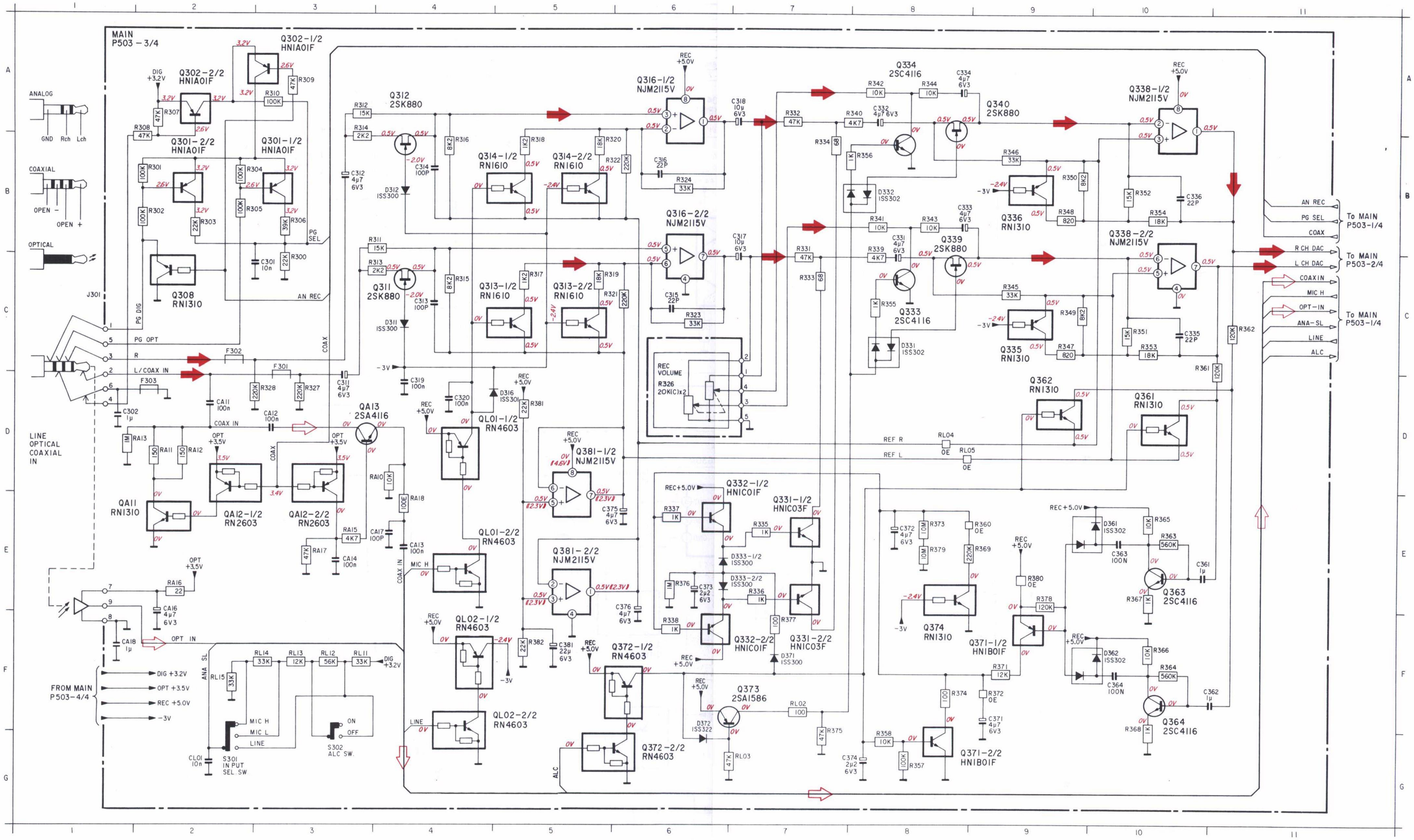

Signal line

- □▷ : DCC REC(WRITE)
- ■▷ : DCC PLAY(READ)
- ⇨ : Digital Audio
- ➡ : Analog Audio(ACC PLAY)

No mark	: STOP
▭	: ACC PLAY
( )	: DCC PLAY
(( ))	: DCC REC

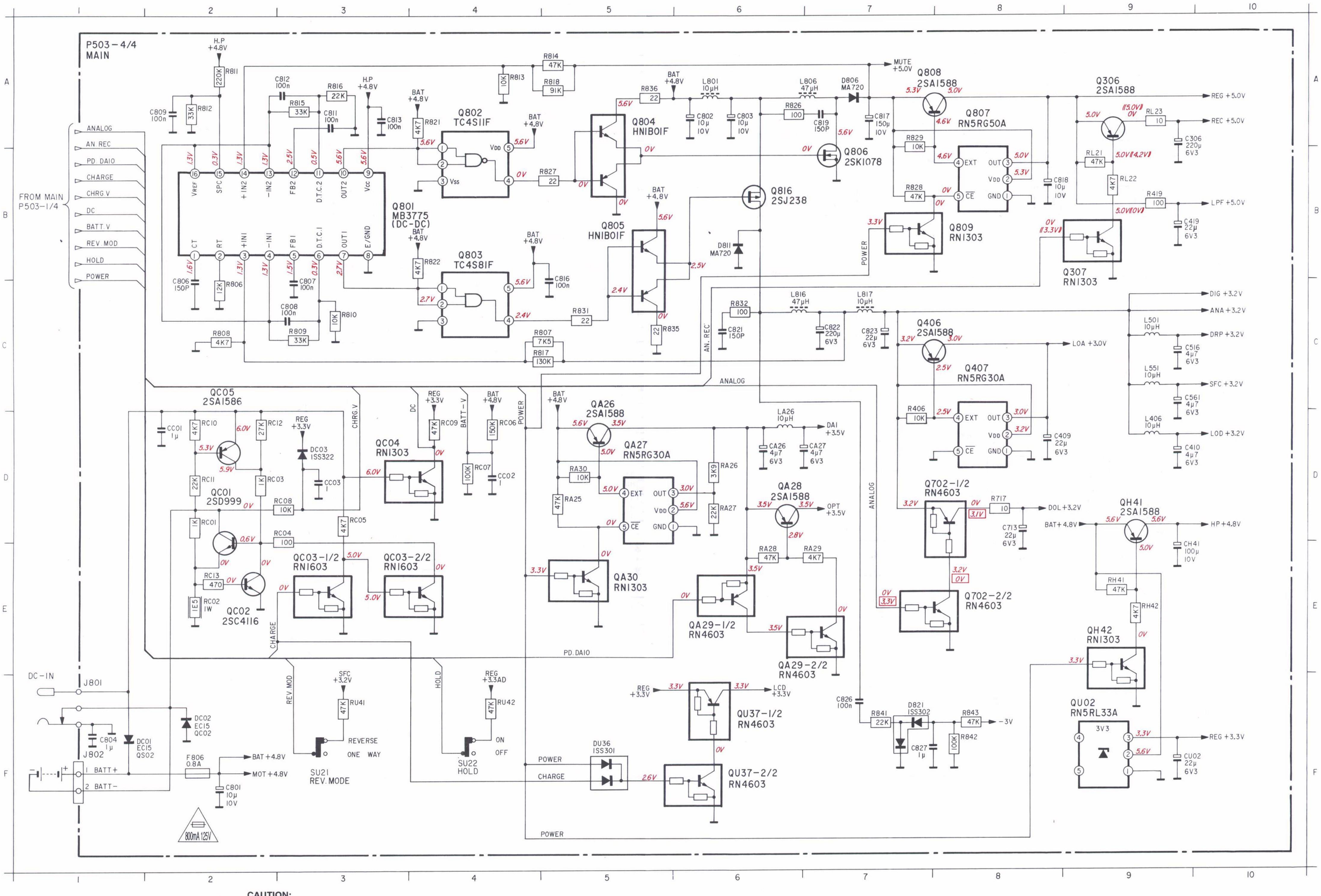

CAUTION:
FOR CONTINUED PROTECTION AGAINST RISK OF FIRE, REPLACE ONLY WITH SAME 800mA,125V FUSE. REFER REPLACEMENT TO QUALIFIED SERVICE PERSONNEL.

C306	A9	R808	C2
C409	D8	R809	C3
C410	D9	R810	C3
C419	B9	R811	A2
C516	C9	R812	A2
C561	C9	R813	A4
C713	D8	R814	A5
C801	F2	R815	A3
C802	A6	R816	A3
C803	A6	R817	C5
C804	F1	R818	A5
C806	C2	R821	A4
C807	C3	R822	B4
C808	C3	R826	A6
C809	A2	R827	B5
C811	A3	R828	B7
C812	A3	R829	A7
C813	A3	R831	C5
C816	C5	R832	C6
C817	A7	R835	C5
C818	B8	R836	A5
C819	A7	R841	F7
C821	C6	R842	F8
C822	C7	R843	F8
C823	C7	RA25	D5
C826	F7	RA26	D6
C827	F8	RA27	D6
CA26	D6	RA28	E6
CA27	D7	RA29	E7
CC01	D2	RA30	D5
CC02	D4	RC01	D2
CC03	D3	RC02	E2
CH41	E9	RC03	D2
CU02	F9	RC04	D3
		RC05	D3
		RC06	D4
D806	A7	RC07	D4
D811	B6	RC08	D3
D821	F7	RC09	D4
DC01	F1	RC10	D2
DC02	F2	RC11	D2
DC03	D3	RC12	D2
DU36	F5	RC13	E2
		RH41	E9
		RH42	E9
F806	F2	RL21	B9
		RL22	B9
		RL23	A9
J801	F1	RU41	F3
J802-1	F1	RU42	F4
J802-2	F1		
		SU21	F3
L406	D9	SU22	F4
L501	C9		
L551	C9		
L801	A6		
L806	A7		
L816	C6		
L817	C7		
LA26	D6		
Q306	A9		
Q307	B9		
Q406	C7		
Q407	D8		
Q702-1/2	D8		
Q702-2/2	E8		
Q801	B3		
Q802	B4		
Q803	C4		
Q804	A5		
Q805	B5		
Q806	B7		
Q807	B8		
Q808	A7		
Q809	B7		
Q816	B6		
QA26	D5		
QA27	D5		
QA28	D6		
QA29-1/2	E6		
QA29-2/2	E7		
QA30	E5		
QC01	D2		
QC02	E2		
QC03-1/2	E3		
QC03-2/2	E3		
QC04	D3		
QC05	D2		
QH41	D9		
QH42	E9		
QU02	F9		
QU37-1/2	F6		
QU37-2/2	F6		
R406	D7		
R419	B9		
R717	D8		
R806	C2		
R807	C5		

Signal line

□▷ : DCC REC(WRITE)

■▷ : DCC PLAY(READ)

⇨ : Digital Audio

➡ : Analog Audio(ACC PLAY)

No mark : STOP

▭ : ACC PLAY

( ) : DCC PLAY

(( )) : DCC REC

C101	A5	J101-7	B3	R140	F11
C102	B5	J101-8	B3	R141	C11
C103	B5	J101-9	B3	R142	E11
C104	B5	J102-1	D3	R147	D11
C105	B5	J102-10	E3	R148	E11
C106	B5	J102-11	E3	R149	D11
C107	B5	J102-12	E3	R150	E11
C108	C5	J102-13	E3	R151	C11
C109	C5	J102-14	E3	R152	F11
C110	C5	J102-15	E3	R176	A13
C111	D5	J102-16	E3	R177	A6
C112	D5	J102-17	E3	R201	G12
C113	D5	J102-18	E3	R202	G15
C114	E5	J102-19	F3	R203	D15
C115	E5	J102-2	D3	R204	D15
C116	E5	J102-20	F3	R205	D13
C117	E5	J102-21	F3	R206	E12
C118	F5	J102-22	F3	R207	E12
C119	F5	J102-23	F3	R208	F12
C120	F5	J102-24	F3	R209	C12
C121	F4	J102-25	F3	R210	G12
C122	E4	J102-26	F3	R211	F12
C123	E4	J102-3	D3	R212	B14
C124	C4	J102-4	D3	R215	B15
C125	B4	J102-5	D3		
C126	A4	J102-6	D3		
C131	A4	J102-7	D3	T.P 01	C6
C132	B4	J102-8	E3	T.P J110	B6
C133	B4	J102-9	E3	T.P J111	C7
C134	B4	J103-1	D16	T.P J112	B8
C135	C4	J103-10	C16	T.P J201	E12
C136	C4	J103-11	C16	T.P J202	E12
C137	D4	J103-12	C16		
C138	D4	J103-13	C16		
C139	E4	J103-14	C16		
C140	E4	J103-15	C16		
C141	F4	J103-17	C16		
C142	F4	J103-18	C16		
C143	C6	J103-19	C16		
C146	D6	J103-2	D16		
C147	D6	J103-20	B16		
C148	F9	J103-21	B16		
C149	C8	J103-22	B16		
C150	C6	J103-23	B16		
C151	C7	J103-24	B16		
C152	C6	J103-25	B16		
C156	B9	J103-26	B16		
C157	B9	J103-27	B16		
C158	A8	J103-28	B16		
C159	B8	J103-29	B16		
C160	A5	J103-3	D16		
C161	A6	J103-30	B16		
C162	B8	J103-31	A16		
C163	A13	J103-32	A16		
C171	D10	J103-33	A16		
C172	E10	J103-34	A16		
C173	D10	J103-35	A16		
C174	E10	J103-36	A16		
C175	D11	J103-4	D16		
C176	E11	J103-5	D16		
C177	C11	J103-6	D16		
C178	E11	J103-7	D16		
C179	D11	J103-8	D16		
C180	E11	J103-9	D16		
C181	D11				
C182	E11				
C187	C10	L101	A8		
C188	F9	L102	B8		
C189	C10	L201	B14		
C190	E9				
C197	D10				
C198	E10	Q101	D7		
C201	F15	Q105	B11		
C202	D15	Q106	F11		
C204	D12	Q116	A12		
C205	F12	Q117	B13		
C206	D12	Q118	A6		
C207	B14	Q119	B6		
		Q201	E13		
		Q202	C15		
J101-1	A3				
J101-10	B3				
J101-11	B3	R101	C6		
J101-12	B3	R102	D6		
J101-13	B3	R103	D6		
J101-14	B3	R104	C6		
J101-15	B3	R115	G9		
J101-16	C3	R116	F9		
J101-17	C3	R117	C10		
J101-18	C3	R118	E10		
J101-19	C3	R119	C9		
J101-2	A3	R120	C10		
J101-20	C3	R125	D10		
J101-21	C3	R126	E9		
J101-22	C3	R127	C10		
J101-23	C3	R128	F10		
J101-24	C3	R131	D10		
J101-25	C3	R132	E10		
J101-26	D3	R135	D10		
J101-3	A3	R136	E10		
J101-4	A3	R137	C10		
J101-5	B3	R138	F10		
J101-6	B3	R139	C11		

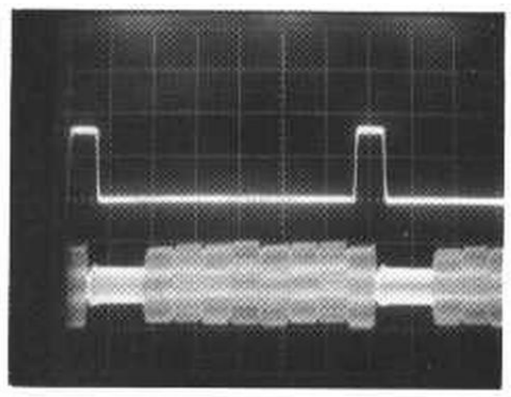

3 RDSYNC (CH1)

1 RDMUX (CH2)

CH1 Y: 0.2V x 10
X: 0.5μs
CH2 Y: 50mV x 10
X: 0.5μs

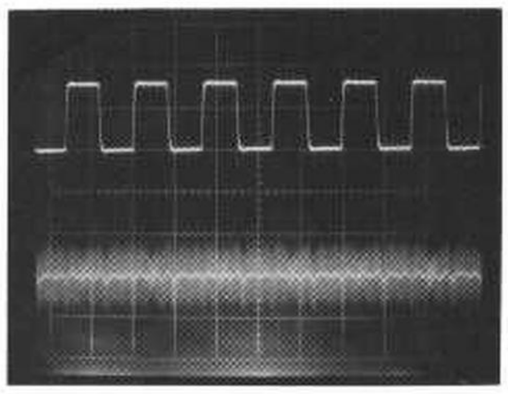

2 RDCLK (CH1)

1 RDMUX (CH2)

CH1 Y: 0.2V x 10
X: 0.2μs
CH2 Y: 50mV x 10
X: 0.2μs

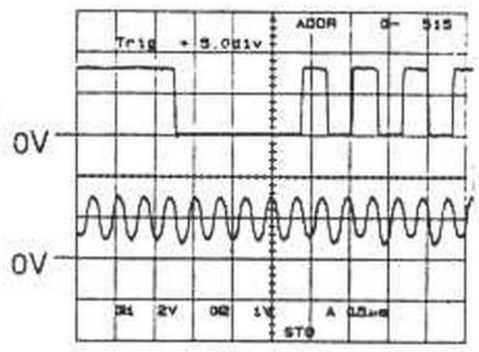

4 AMP O

5 WDATA

CH1 Y: 2V
X: 0.5μs

CH2 Y: 1V
X: 0.5μs

Signal line

□▷ : DCC REC(WRITE)

■▷ : DCC PLAY(READ)

⇨ : Digital Audio

➡ : Analog Audio(ACC PLAY)

No mark : STOP

▭ : ACC PLAY

( ) :DCC PLAY

(( )) :DCC REC

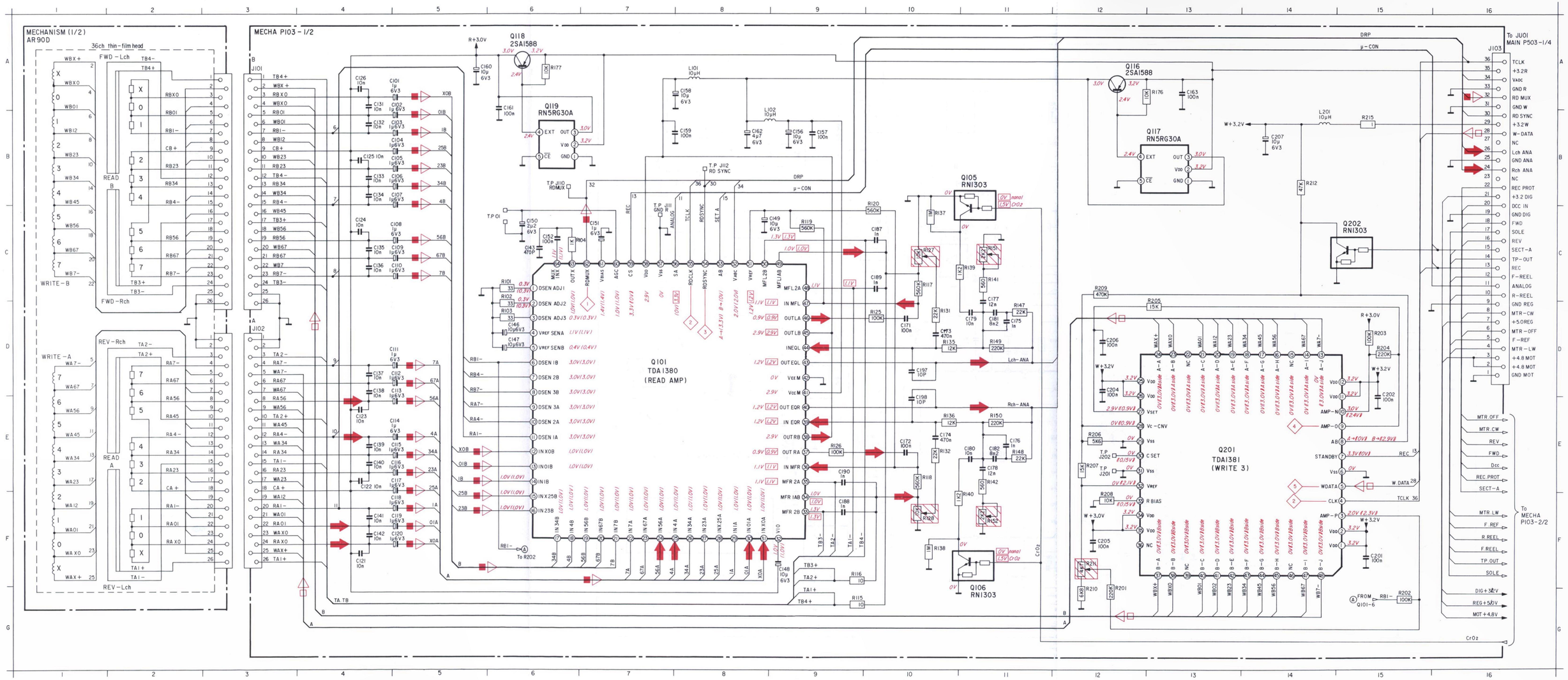
MECHANISM (1/2)
AR90D
36ch thin-film head
FWD-Lch
FWD-Rch
READ B
WRITE-B
REV-Rch
REV-Lch
READ A
WRITE-A
MECHA P103-1/2
Q101
TDA1380
(READ AMP)
Q201
TDA1381
(WRITE 3)
Q118
2SA1588
Q119
RN5RG30A
Q116
2SA1588
Q117
RN5RG30A
Q105
RN1303
Q106
RN1303
Q202
RN1303
To JU01
MAIN P503-1/4
To
MECHA
P103-2/2
DRP
μ-CON
TCLK
+3.2R
Vaoc
GND R
RD MUX
GND W
RD SYNC
+3.2W
W-DATA
NC
Lch ANA
GND ANA
Rch ANA
REC PROT
+3.2 DIG
DCC IN
GND DIG
FWD
SOLE
REV
SECT-A
TP-OUT
REC
F-REEL
ANALOG
R-REEL
GND REG
MTR-CW
+5.0REG
MTR-OFF
F-REF
MTR-LW
+4.8 MOT
GND MOT
MTR.OFF
MTR.CW
REV
FWD
Dcc
REC.PROT
SECT-A
MTR.LW
F.REF
R.REEL
F.REEL
TP.OUT
SOLE
DIG+3.2V
REG+5.0V
MOT+4.8V
W.DATA
TCLK 36
REC
Lch-ANA
Rch-ANA

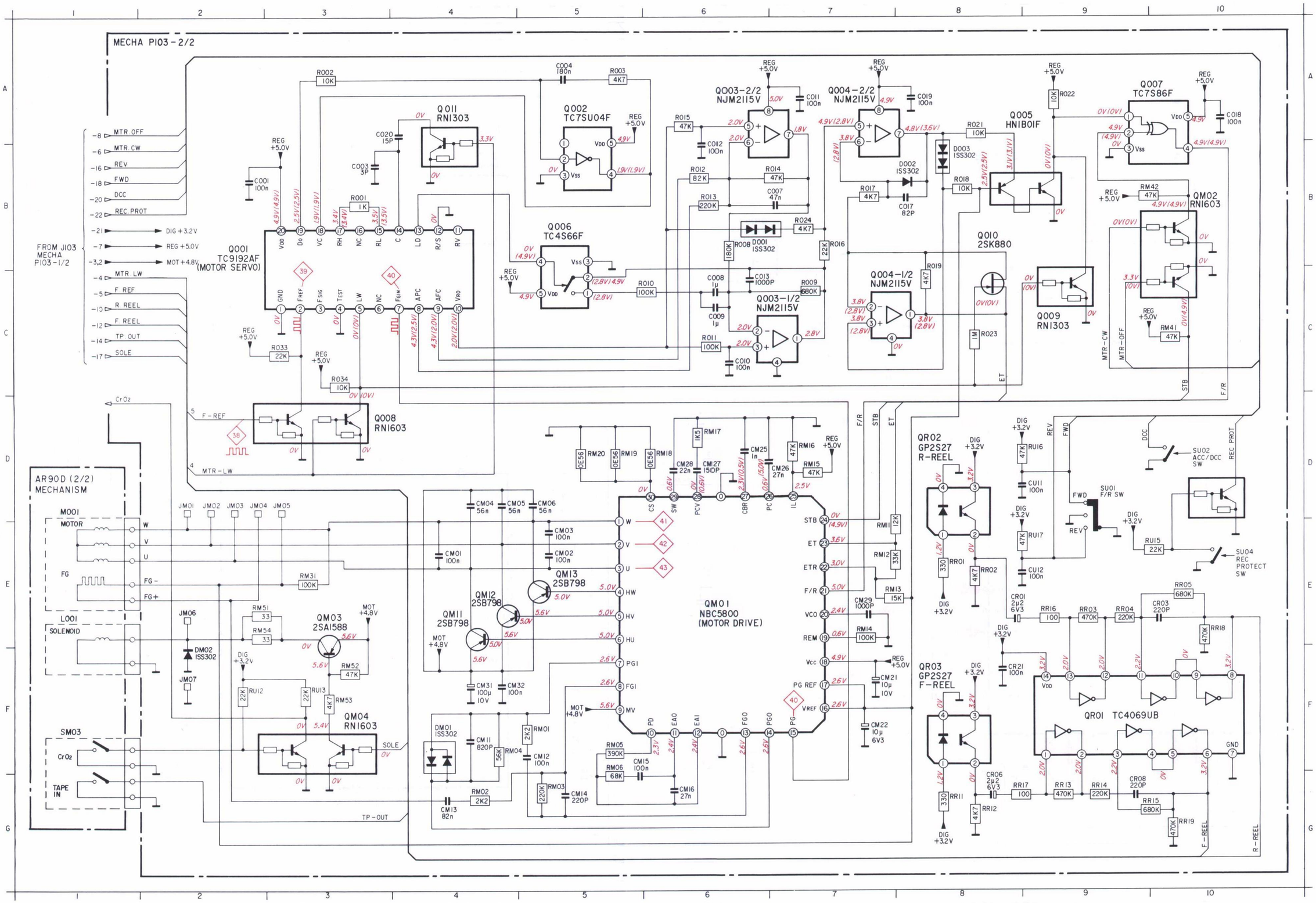
MECHA P103-2/2
FROM J103 MECHA P103-1/2
MTR OFF
MTR CW
REV
FWD
DCC
REC PROT
DIG +3.2V
REG +5.0V
MOT +4.8V
MTR LW
F REF
R REEL
F REEL
TP OUT
SOLE
Q001 TC9192AF (MOTOR SERVO)
Q002 TC7SU04F
Q003-2/2 NJM2115V
Q003-1/2 NJM2115V
Q004-2/2 NJM2115V
Q004-1/2 NJM2115V
Q005 HN1B01F
Q006 TC4S66F
Q007 TC7S86F
Q008 RN1603
Q009 RN1303
Q010 2SK880
Q011 RN1303
QM01 NBC5800 (MOTOR DRIVE)
QM02 RN1603
QM03 2SA1588
QM04 RN1603
QM11 2SB798
QM12 2SB798
QM13 2SB798
QR01 TC4069UB
QR02 GP2S27 R-REEL
QR03 GP2S27 F-REEL
AR90D (2/2) MECHANISM
M001 MOTOR
L001 SOLENOID
SM03
SU01 F/R SW
SU02 ACC/DCC SW
SU04 REC PROTECT SW
TP-OUT
F-REF
MTR-LW
MTR-CW
MTR-OFF
STB
F/R
ET
R-REEL
F-REEL

C001	B2	R018	B8
C003	B3	R019	C8
C004	A5	R021	A8
C007	B6	R022	A9
C008	C6	R023	C8
C009	C6	R024	B7
C010	C6	R033	C3
C011	A7	R034	C3
C012	B6	RM01	F5
C013	C6	RM02	G4
C017	B8	RM03	G5
C018	A10	RM04	F4
C020	A4	RM05	F5
CM01	E4	RM06	G5
CM02	E5	RM11	E7
CM03	E5	RM12	E7
CM04	D4	RM13	E7
CM05	D4	RM14	E7
CM06	D5	RM15	D7
CM11	F4	RM16	D7
CM12	F5	RM17	D6
CM13	G4	RM18	D6
CM14	G5	RM19	D5
CM15	G5	RM20	D5
CM16	G6	RM31	E3
CM21	F7	RM41	C10
CM22	F7	RM42	B9
CM25	D6	RM51	E2
CM26	D7	RM52	F3
CM27	D6	RM53	F3
CM28	D6	RM54	E2
CM29	E7	RR01	E8
CM31	F4	RR02	E8
CM32	F4	RR03	E9
CO19	A8	RR04	E9
CR01	E8	RR05	E10
CR03	E10	RR11	G8
CR06	G8	RR12	G8
CR08	G9	RR13	G9
CR21	F8	RR14	G9
CU11	D9	RR15	G10
CU12	E9	RR16	E9
		RR17	G8
		RR18	E10
D002	B8	RR19	G10
D003	B8	RU12	F2
DM01	F4	RU13	F3
DM02	F2	RU15	E10
DO01	B6	RU16	D9
		RU17	E9
JM01	D2	SM03	F1
JM02	D2	SU01	D9
JM03	D2	SU02	D10
JM04	D3	SU04	E10
JM05	D2		
JM06	F2		
JM07	E2		
L001	E1		
M001	E1		
Q001	B3		
Q002	B5		
Q003-1/2	C7		
Q003-2/2	A6		
Q004-1/2	C7		
Q004-2/2	A7		
Q005	B9		
Q006	B5		
Q007	A10		
Q008	D3		
Q009	C9		
Q010	C8		
Q011	A4		
QM01	E6		
QM02	B10		
QM03	E3		
QM04	F3		
QM11	E4		
QM12	E4		
QM13	E5		
QR01	F9		
QR02	D8		
QR03	F8		
QU11	D10		
R001	B3		
R002	A3		
R003	A5		
R008	B6		
R009	C7		
R010	C6		
R011	C6		
R012	B6		
R013	B6		
R014	B7		
R015	A6		
R016	B7		
R017	B7		

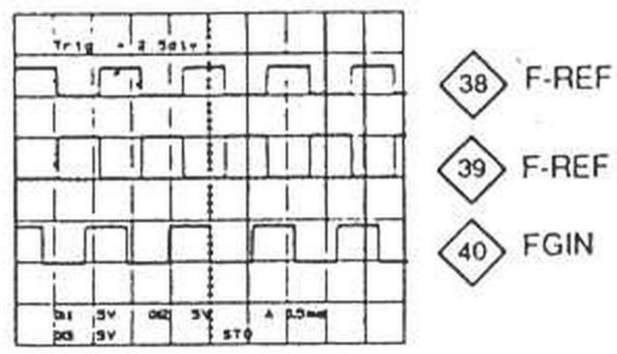

Y: 5V
X: 0.5ms

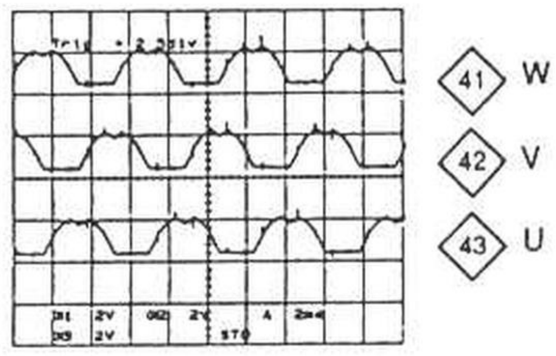

Y: 2V
X: 2ms

Signal line

□▷ : DCC REC(WRITE)

■▷ : DCC PLAY(READ)

⇨ : Digital Audio

➡ : Analog Audio(ACC PLAY)

No mark : STOP

▭ : ACC PLAY

( ) : DCC PLAY

(( )) : DCC REC

C001	F6	CM13	E7	R022	D8
C002	E4	CM14	E7	R023	D7
C003	E6	CM15	E3	R024	E4
C004	F4	CM16	E3	R033	F6
C007	E3	CM21	E8	R034	E7
C008	E3	CM22	E8	R101	A8
C009	E3	CM25	E8	R102	A8
C010	E3	CM26	E8	R103	A8
C011	E3	CM27	E8	R104	B8
C012	E3	CM28	E8	R115	B8
C013	E3	CM29	D8	R116	C7
C017	E7	CM31	F9	R117	C8
C018	D8	CM32	E8	R118	C8
C019	E7	CR01	C1	R119	C8
C020	E6	CR03	C1	R120	C8
C101	A8	CR06	C2	R125	C8
C102	A8	CR08	C2	R126	C7
C103	A7	CR21	C2	R127	C8
C104	A7	CU11	D5	R128	C7
C105	B7	CU12	D5	R131	C8
C106	B7			R132	C7
C107	B7			R135	C8
C108	A7	D001	E4	R136	C8
C109	B7	D002	E7	R137	C8
C110	B7	D003	E7	R139	C8
C111	B7	DM01	E8	R140	C7
C112	B7	DM02	D1	R141	C8
C113	B7			R142	C8
C114	B7			R148	C8
C115	B7	J101	B6	R149	C8
C117	B7	J102	C6	R150	C8
C118	B7	J103	E9	R151	C8
C119	C7	J110	B8	R152	C8
C120	C7	J111	C8	R176	B2
C121	C4	J112	D8	R177	B2
C122	C4	J201	D7	R201	D6
C123	C4	J202	D7	R202	D6
C124	B4	JM01	G8	R203	D6
C125	B4	JM02	F8	R204	D6
C126	B4	JM03	F8	R205	D7
C131	A7	JM04	F9	R206	D7
C132	A7	JM05	F9	R207	D7
C133	A7	JM06	G9	R208	D7
C134	A7	JM07	G9	R209	D7
C135	A7			R210	C7
C136	B7			R211	D7
C137	B7	L101	A3	R212	D6
C138	B7	L102	A3	R215	D2
C139	C7	L201	D2	RM01	E8
C140	C7			RM02	E7
C141	C7			RM03	E7
C142	C7	Q001	E6	RM04	E8
C143	B8	Q002	E4	RM05	E3
C146	A2	Q003	E3	RM06	E3
C147	A3	Q004	E7	RM11	E7
C148	C3	Q005	E7	RM12	D2
C149	B8	Q006	E3	RM13	D3
C150	A8	Q007	D8	RM14	D8
C151	B8	Q008	F6	RM15	D2
C152	B8	Q009	D7	RM16	D2
C156	A3	Q010	E7	RM17	E8
C157	C8	Q011	E6	RM18	E8
C158	A3	Q101	B8	RM19	E8
C159	B8	Q105	C8	RM20	F8
C160	B5	Q106	C7	RM31	G2
C161	C4	Q116	B2	RM41	D2
C162	A2	Q117	B2	RM42	D8
C163	B2	Q118	B2	RM51	D1
C171	C8	Q119	B2	RM52	D1
C172	C7	Q201	D7	RM53	D1
C173	C8	Q202	D2	RM54	D1
C174	C7	QM01	E2	RR01	D3
C175	C8	QM02	D8	RR02	D3
C176	C8	QM03	D1	RR03	C1
C177	C8	QM04	D2	RR04	C1
C178	C7	QM11	F2	RR05	C1
C179	C8	QM12	F2	RR11	C3
C180	C7	QM13	F2	RR12	C3
C181	C8	QR01	C2	RR13	C2
C182	C8	QR02	D3	RR14	C2
C187	B8	QR03	C3	RR15	C2
C188	C7	QU11	B1	RR16	C1
C189	B8			RR17	C2
C190	C7			RR18	C2
C197	C8	R001	E6	RR19	C2
C198	C8	R002	E4	RU12	B1
C201	D6	R003	E4	RU13	D2
C202	D6	R008	E3	RU14	B1
C204	D7	R009	E3	RU15	B1
C205	D7	R010	E3	RU16	D4
C206	D7	R011	E4	RU17	D4
C207	D2	R012	E3		
CM01	G2	R013	E3		
CM02	F2	R014	E3	SU01	D5
CM03	F2	R015	E3	SU02	A2
CM04	F2	R016	E3	SU04	A2
CM05	F2	R017	E7		
CM06	F2	R018	E7		
CM11	E8	R019	E7		
CM12	E8	R021	E7		

MECHANISM P.C. BOARD (P103)

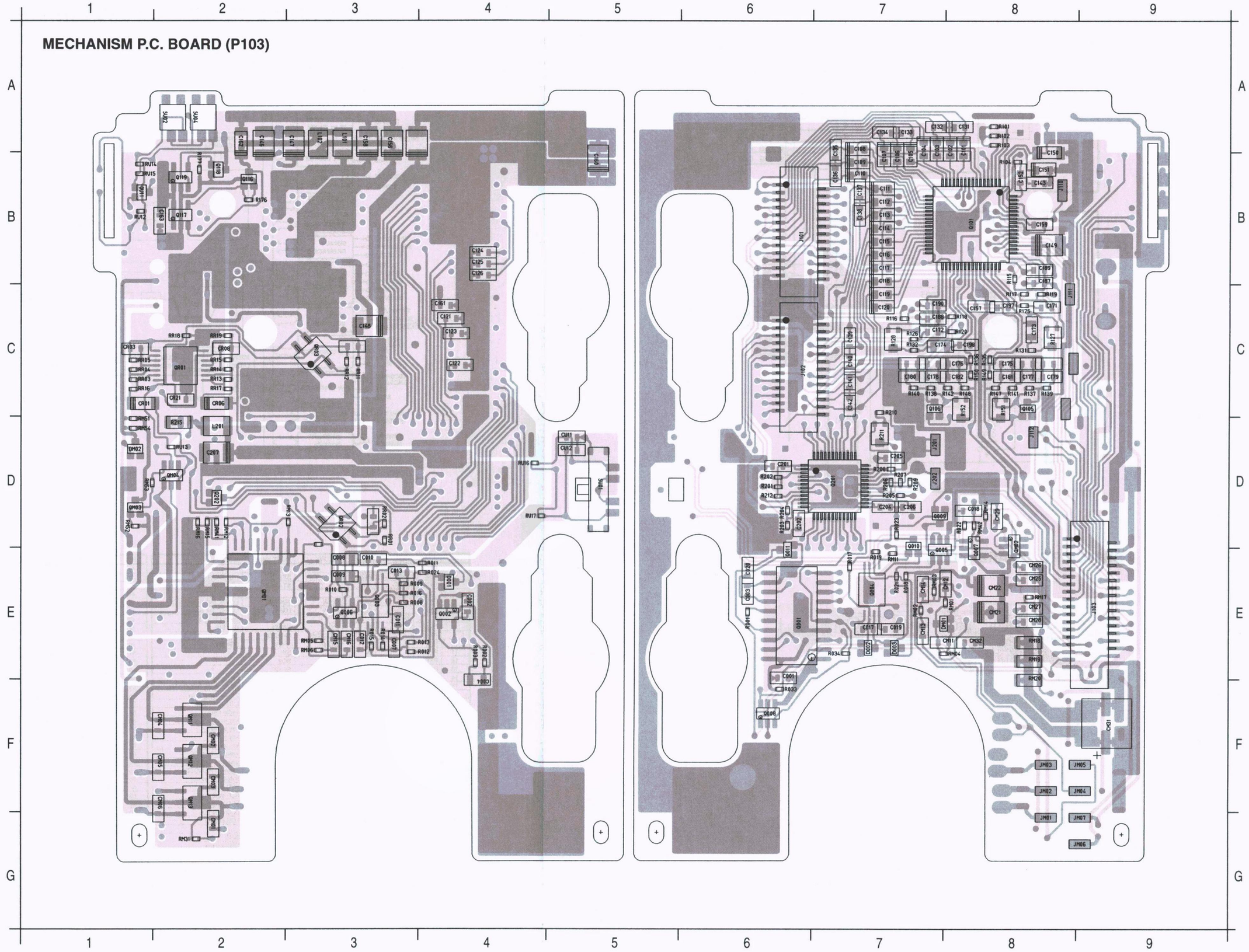

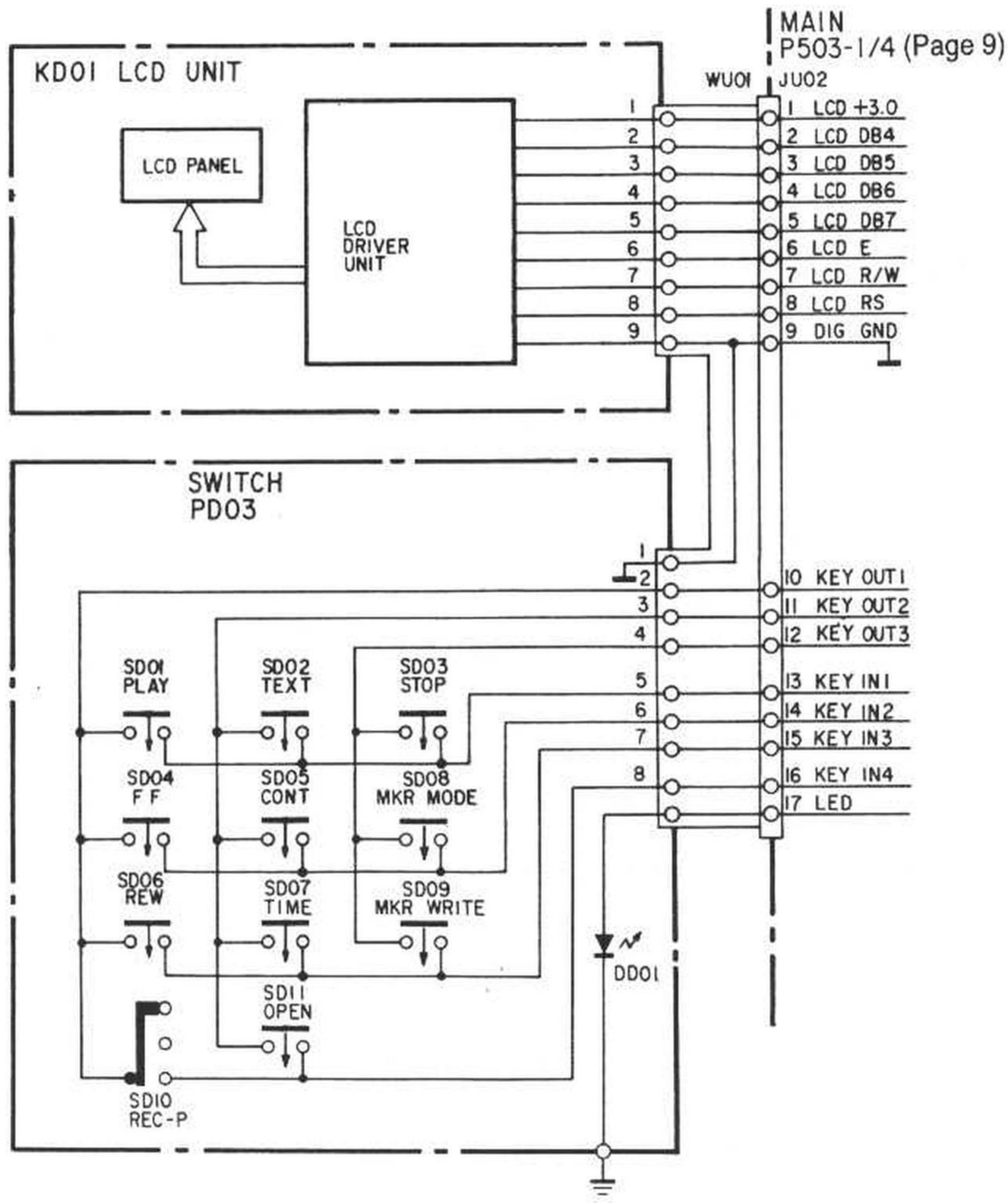

SWITCH P.C. BOARD (PD03)

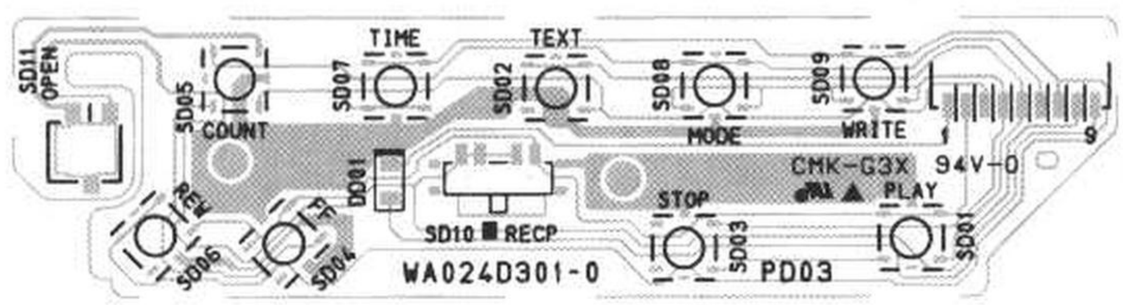

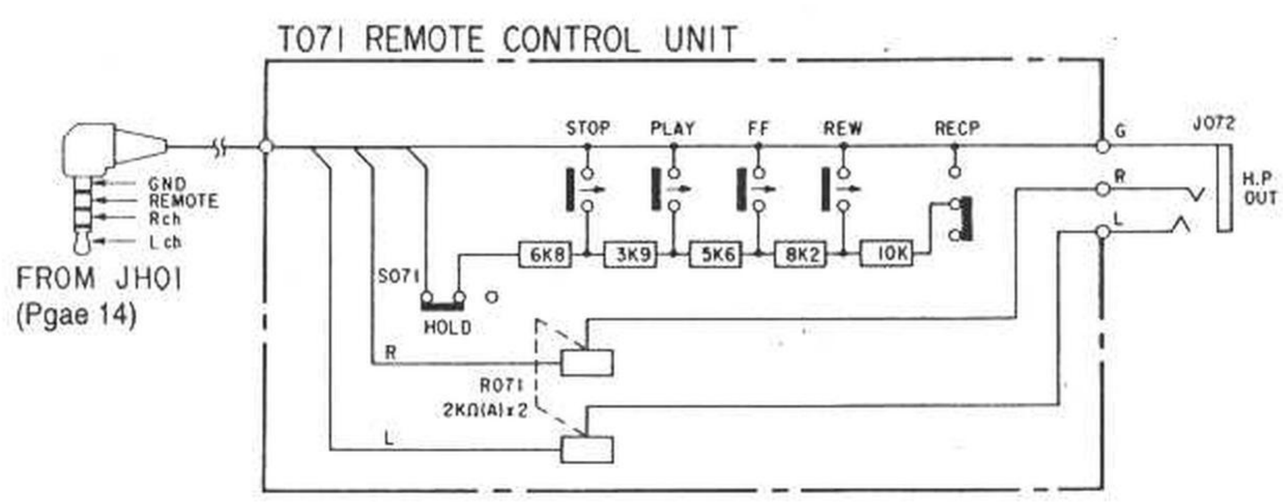

IC BLOCK DIAGRAM AND TERMINAL FUNCTION OF IC'S

• QU01 μPD78058 μ-COM

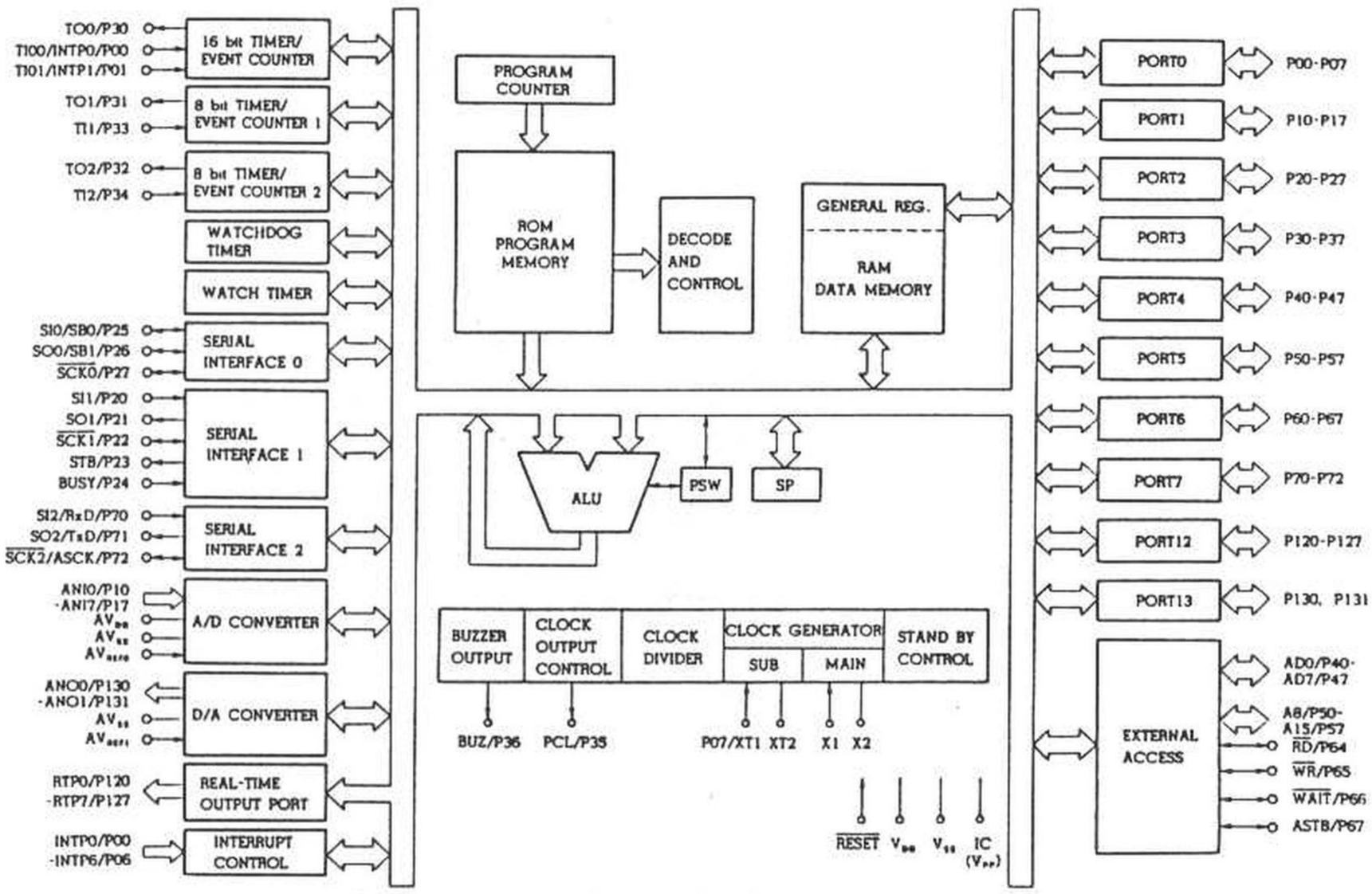

PIN	PORT	USE	IN/OUT	ACTIVE	PORT NAME	NOTICE
1	P15	ANI5	A/D		SPEED	
2	P16	ANI6	A/D		STATE1	(H)PH/OTHER(L)
3	P17	ANI7	A/D		STATE2	DCC/HOLD/TP_OUT detect
4		AVss	-			A/D GND
5	P130		OUT	H:ON	ADPON	LOVAC(AD POWER ON)
6	P131		OUT	H:ON	DAPON	LOVAC DA power
7		AVref1	-			conect to Vdd
8	P70		IN	L:ON	_FWD	DIR SW
9	P71		OUT	H:QUICK	CHARGE	Select R for charge
10	P72		IN	L:ON	_REV	DIR SW
11	P20		IN		SI2	
12	P21		OUT		SO2	
13	P22		OUT		SCK2	
14	P23		OUT		L3MODE	L3 control
15	P24		OUT	H:P_DOWN	PD_ADAS	ADAS POWER DOWN
16	P25	SI0	IN/OUT		L3DATA	2 lines serial data
17	P26		OUT	H:Run	AVCONT	L:Sleep H:Run
18	P27	SCK0	OUT		L3CLK	serial clock
19	P40		IN (R)		K_IN4	key assign
20	P41		IN (R)		K_IN3	key assign
21	P42		IN (R)		K_IN2	key assign
22	P43		IN (R)		K_IN1	key assign
23	P44		IN (R)	L:WAKE_UP	WAKE_UP	wake up from PC
24	P45		IN (R)	L:IN	_CAS	wake up CASSETT
25	P46		IN (R)	L:IN	_REMT	wake up REMOTE
26	P47		IN (R)	L:IN	_DC	extem DC power
27	P50		I/O		LCD_D4	LCD data bus
28	P51		I/O		LCD_D5	LCD data bus
29	P52		I/O		LCD_D6	LCD data bus
30	P53		I/O		LCD_D7	LCD data bus
31	P54		OUT		LCD_E	LCD control
32	P55		OUT	L:ALC	_ALC	
33		VSS	-			GND
34	P56		OUT		LCD_RS	LCD control
35	P57		OUT		SBEFU	
36	P60		OUT	L:ACTIVE	K_OUT1	key assign
37	P61		OUT	L:ACTIVE	K_OUT2	key assign
38	P62		OUT	L:ACTIVE	K_OUT3	key assign
39	P63		OUT	L:ON	_R_LED	REC LED
40	P64		OUT	H:ACTIVE	DAIO_SB	same SYNCDAIO

PIN	PORT	USE	IN/OUT	ACTIVE	PORT NAME	NOTICE
41	P65		OUT	H:P DN	PD_DAIO	DAIO power down
42	P66		OUT		SBDIRU	
43	P67		OUT	H:ON	AN_REC	ana. rec circuit power
44	P30	TO0	OUT	920 Hz	F_REF	square wave out
45	P31		OUT	H:MUTE	MUTE	AUDIO mute
46	P32		OUT	H:ON	POWER	all circuit power
47	P33		OUT	H:STANDBY	STANBY	dig ics power
48	P34	TI2	OUT	H:RESET	R_DCC	reset DCC ICs
49	P35		OUT	H:ANA	ANALOG	Audio ana. or dig
50	P36	BUZ	OUT		BEEP	BEEP sound
51	P37		OUT	L:REC	_REC	REC/PB circuit
52	P120		OUT	H:A	SECT_A	READ_3
53	P121		OUT	H:ON	SOLE_ON	SOLENOID ON/OFF
54	P122		OUT	L:COAX	_COAX	
55	P123		IN		L3INT	DRP
56	P124		OUT		DADIRU	
57	P125		OUT	H:LOW_G	MTR_LW	motor gain
58	P126		OUT	L:ON	MTR_OFF	motor off
59	P127		OUT	H:CW	MTR_CW	motor rotate CW/CCW
60		RESET	-	L:RESET	RESETU	uP reset in
61	P00	INTP0	INT	L_EDGE	R_REEL	R_REEL (neg.edge)
62	P01	INTP1	INT	L_EDGE	F_REEL	F_REEL (neg.edge)
63	P02	INTP2	INT	H:NO DATA	UDAVAIL	from DAIO
64	P03	INTP3	INT		UNLOCK	from DAIO
65	P04	INTP4	INT	L_EDGE	L3REF	DRP(neg.edge)
66	P05	INTP5	INT	L:OVER	NO_OVR	LOVAC(over load)
67	P06	INTP6	IN	H:PROT	REC_PROTECT	REC protect SW
68		Vdd	-			Vdd
69		X2	-			main system x'tal
70		X1	-			main system x'tal
71		IC(Vpp)	-			connect to Vss
72		XT2	-			open (sub X'tal)
73	P07		IN	H:OK	F_COPY	free copy
74		AVdd	-			A/D Vdd
75		AVref0	-			A/D reference V
76	P10	ANI0	A/D		BATT_V	battery detect
77	P11	ANI1	A/D		REMOTE	remote detect
78	P12	ANI2	A/D		ANA_SL	LINE,MIC_H,MIC_L
79	P13	ANI3	A/D		PG_SL	PG_IN,DIG,OPT
80	P14	ANI4	A/D		CHRG_V	for charge

• Q501 SAA3323 DRP

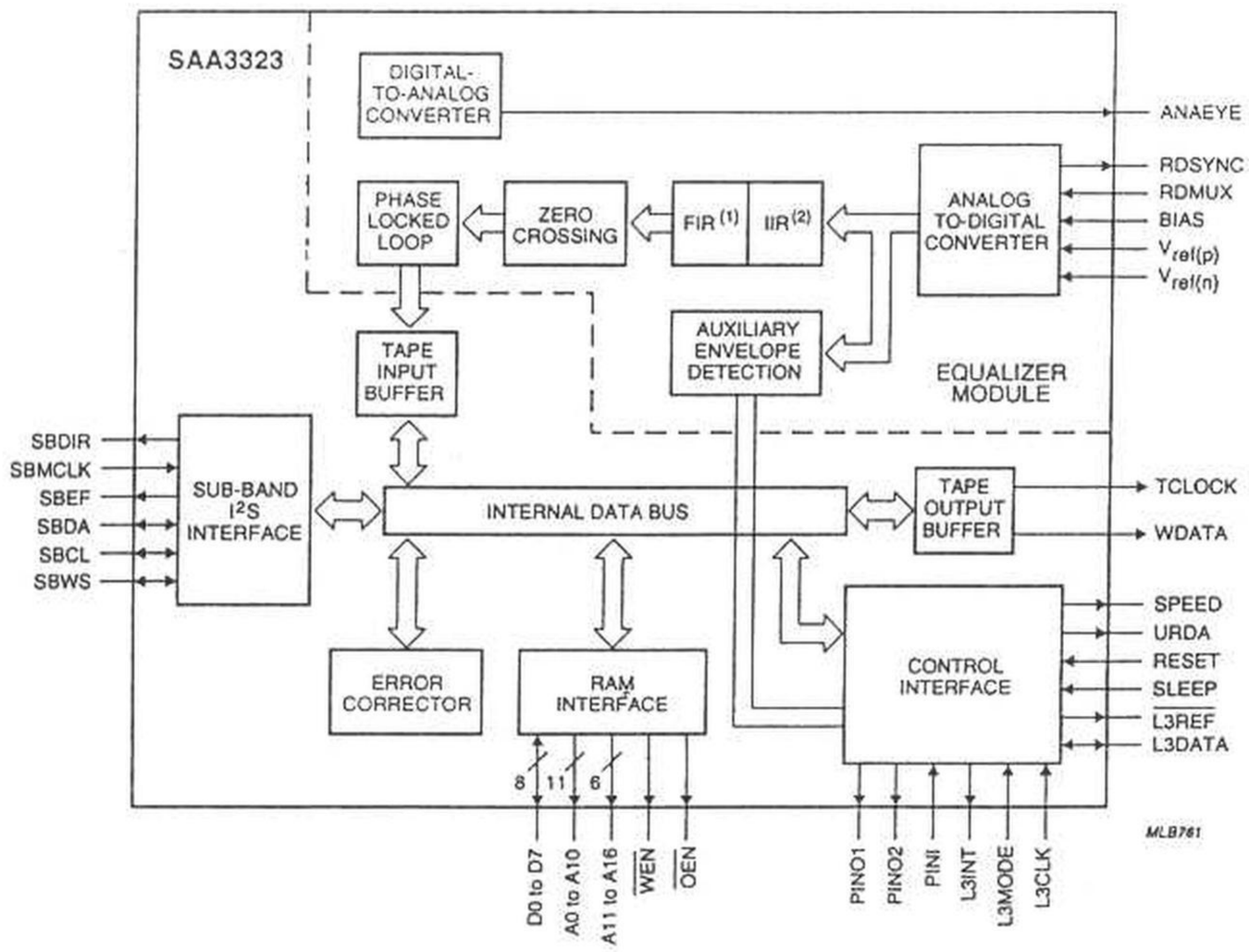

(1) FIR = Finite Impulse-Response.
(2) IIR = Infinite Impulse-Response.

SYMBOL	PIN DCC170 QFP80	PIN DCC175 TQFP80	DESCRIPTION	TYPE(1)
SBWS	1	79	word select for sub-band PASC interface	I/O (1 mA)
SBCL	2	80	bit clock for sub-band PASC interface	I/O (1 mA)
SBDA	3	1	data line for sub-band PASC interface	I/O (1 mA)
SBDIR	4	2	direction line for sub-band PASC interface	O (1 mA)
SBMCLK	5	3	master clock for sub-band PASC interface	I
URDA	6	4	unreliable data	O (1 mA)
L3MODE	7	5	mode line for L3 interface	I
L3CLK	8	6	bit clock line for L3 interface	I
L3DATA	9	7	serial data line for L3 interface	I/O (2 mA)
L3INT	10	8	L3 interrupt output	O (1 mA)
V_{DD1}	11	9	digital supply voltage	S
V_{SS1}	12	10	digital ground	S
$\overline{L3REF}$	13	11	L3 bus timing reference	O (1 mA)
RESET	14	12	reset SAA3323	I
SLEEP	15	13	sleep mode selection of SAA3323	I
CLK24	16	14	24.576 MHz clock input	I
AZCHK	17	15	channel 0 and channel 7 azimuth monitor	O (1 mA)
MCLK	18	16	6.144 MHz clock output	O (1 mA)
TEST3	19	17	TEST3 output; do not connect	O (1 mA)
ERCOSTAT	20	18	ERCO status, for symbol error rate measurements	O (1 mA)
$\overline{OEN}$	21	19	output enable for RAM	O (2 mA)
A10/$\overline{RAS}$	22	20	address SRAM; $\overline{RAS}$ DRAM	O (2 mA)
V_{DD2}	23	21	digital supply voltage	S
V_{SS2}	24	22	digital ground	S
D7	25	23	data SRAM	I/O (4 mA)
D6	26	24	data SRAM	I/O (4 mA)
D5	27	25	data SRAM	I/O (4 mA)
D4	28	26	data SRAM	I/O (4 mA)
D3	29	27	data SRAM; data DRAM	I/O (4 mA)
D2	30	28	data SRAM; data DRAM	I/O (4 mA)
D1	31	29	data SRAM; data DRAM	I/O (4 mA)
V_{DD7}	32	30	digital supply voltage for RAM	S
V_{SS7}	33	31	digital ground for RAM	S
D0	34	32	data SRAM; data DRAM	I/O (4 mA)
A0	35	33	address SRAM; address DRAM	O (2 mA)
A1	36	34	address SRAM; address DRAM	O (2 mA)
A2	37	35	address SRAM; address DRAM	O (2 mA)
A3	38	36	address SRAM; address DRAM	O (2 mA)

Note

1. I = input; I_A = analog input; I_{pd} = input with pull-down resistance; I/O = bidirectional; O = output; O_A = analog output; O_t = 3-state output; S = supply.

SYMBOL	PIN DCC170 QFP80	PIN DCC175 TQFP80	DESCRIPTION	TYPE(1)
A4	39	37	address SRAM; address DRAM	O (2 mA)
V_{SS3}	40	38	digital ground	S
V_{DD3}	41	39	digital supply voltage	S
A5	42	40	address SRAM; address DRAM	O (2 mA)
A6	43	41	address SRAM; address DRAM	O (2 mA)
A7	44	42	address SRAM; address DRAM	O (2 mA)
A12/PINO5	45	43	address SRAM; Port expander output 5	O (2 mA)
A14/PINO1	46	44	address SRAM; Port expander output 1	O (2 mA)
A16/PINO3	47	45	address SRAM; Port expander output 3	O (2 mA)
A15/PINO4	48	46	address SRAM; Port expander output 4	O (2 mA)
$\overline{WEN}$	49	47	write enable for RAM	O (2 mA)
A13/PINO2	50	48	address SRAM; Port expander output 2	O (2 mA)
A8	51	49	address SRAM; address DRAM	O (2 mA)
V_{DD4}	52	50	digital supply voltage	S
V_{SS4}	53	51	digital ground	S
A9/$\overline{CAS}$	54	52	address SRAM; $\overline{CAS}$ for DRAM	O (2 mA)
A11	55	53	address SRAM	O (2 mA)
SPEED	56	54	Pulse Width Modulation (PWM) capstan control output for deck	O_t (1 mA)
PINO2	57	55	Port expander output 2	O_t (1 mA)
WDATA	58	56	serial output to write amplifier	O (1 mA)
TCLOCK	59	57	3.072 MHz clock output for tape I/O	O (1 mA)
V_{SS5}	60	58	digital ground	S
V_{DD5}	61	59	digital supply voltage	S
TEST2	62	60	TEST mode select; do not connect	I_{pd}
RDMUX	63	61	analog multiplexed input from read amplifier	I_A
$V_{ref(p)}$	64	62	ADC positive reference voltage	I_A
$V_{ref(n)}$	65	63	ADC negative reference voltage	I_A
SUBSTR	66	64	substrate connection	I_A
BIAS	67	65	bias current for ADC	I_A
V_{SSA}	68	66	analog ground	S
V_{DDA}	69	67	analog supply voltage	S
ANAEYE	70	68	analog eye pattern output	O_A
RDSYNC	71	69	synchronization output for read amplifier	O (1 mA)
V_{DD6}	72	70	digital supply voltage	S
V_{SS6}	73	71	digital ground	S
CHTST1	74	72	channel test pin 1	O (1 mA)
CHTST2	75	73	channel test pin 2	O (1 mA)
TEST0	76	74	TEST mode select; do not connect	I_{pd}
TEST1	77	75	TEST mode select; do not connect	I_{pd}
PINI	78	76	Port expander input	I
PINO1	79	77	Port expander output 1	O (1 mA)
SBEF	80	78	sub-band PASC error flag line	O (1 mA)

◇ MECHANICAL PARTS LIST

001B	4822 443 41618	TOP CASE KIT
010B	4822 450 62266	LCD WINDOW
011B	4822 410 63301	OPERATING BUTTON
012B	4822 411 61984	REC KNOB
014B	4822 492 33462	SPRING
017B	4822 381 11533	LENS
021B	4822 443 64211	RETAINER, LCD MOLD COVER
022B	4822 502 30753	SCREW 1.4X2.5
023B	4822 502 30753	SCREW 1.4X2.5
026B	4822 492 71573	CASSETE GUIDE SPRING (R)
027B	4822 492 71574	CASSETE GUIDE SPRING (L)
001G	4822 403 71118	ARM ASS'Y
010G	4822 502 21421	SCREW 1.4X2
011G	4822 502 21428	SCREW 1.4X2
015G	4822 502 21517	SCREW 1.4X1.5
020G	4822 464 51044	CENTER FRAME KIT
030G	4822 411 61982	SLIDE KNOB
031G	4822 411 61983	OPEN KNOB
035G	4822 403 71121	LOCK LEVER ASS'Y
038G	4822 492 52408	LOCK HOOK SPRING
043G	4822 532 52597	WASHER
050G	4822 403 71119	FRONT BRACKET
052G	4822 502 21516	SCREW 1.4X2.5
055G	4822 502 21516	SCREW 1.4X2.5
061G	4822 502 21516	SCREW 1.4X2.5
062G	4822 502 21518	SCREW 1.4X3.5
065G	4822 502 21516	SCREW 1.4X2.5
070G	4822 492 71576	BATT. CONTACTOR
080G	4822 464 51113	REAR FRAME
081G	4822 502 21516	SCREW 1.4X2.5
101G	4822 443 51261	BOTTOM CASE (175) [/00]
101G	4822 443 51259	BOTTOM CASE (175) [/05]
103G	4822 462 42119	LEG
110G	4822 502 21516	SCREW 1.4X2.5
115G	4822 502 21516	SCREW 1.4X2.5
120G	4822 443 64215	LID, BATTERY LID
JA51	4822 265 41534	JACK, COMPUTER I/O 10P
JH01	4822 267 31787	JACK, HEAD PHONES OUT
JU01	4822 265 61292	JACK, 36P
JU02	4822 265 41408	JACK, 17PIN
J072	4822 267 31788	JACK HSJ1456-01-023(REMOTE)
J101	4822 265 51376	JACK, CE-235 26P
J102	4822 265 51376	JACK, CE-235 26P
J103	4822 265 61292	JACK, CE-235 36P
J301	4822 265 20671	JACK, (LINE MIC DIG. IN)
J401	4822 265 20669	JACK, (OPT/OUTPUT)
J801	4822 267 31789	JACK, DC IN
J802	4822 265 31064	JACK
KD01	4822 130 91371	LCD DISPLAY STNTYPE
RH01	4822 101 30847	VARIABLE, VR 20K (C)X2
R326	4822 101 30847	VARIABLE, VR 20K (C)X2
SH01	4822 277 21749	SLIDE SWITCH
SM03	4822 271 30848	MINI SWITCH
SU01	4822 277 21752	SLIDE SWITCH
SU02	4822 276 13531	PUSH SWITCH
SU21	4822 277 21748	SLIDE SWITCH (REV MODE)
SU22	4822 277 21748	SLIDE SWITCH (HOLD)
S301	4822 277 21749	SLIDE SWITCH (INPUT SEL.)
S302	4822 277 21748	SLIDE SWITCH (ALC)
S701	4822 277 21748	SLIDE SWITCH (DOLBY)
WU01	4822 466 10662	FLEXIBLE P.C.B.
WU02	4822 320 50347	FLEXIBLE P.C.B.

PACKAGING

001T	4822 736 22525	USER MANUAL
001Z		CARRYING CASE
002Z		TAPE CARTRIDGE DCC060 BLANK TAPE(D-60)
⚠A071	4822 219 82697	A.C.ADAPTOR SBC6619/30 [/00]
⚠A071	4822 219 82698	A.C.ADAPTOR SBC6619/35 [/05]
A072	4822 242 50083	HEADPHONES IN EAR TYPE
⚠B071	4822 138 10555	BATTERY PACK SBC6434
T071	4822 218 30763	UNIT K, REMOTE CONTROL
W071	4822 321 21602	CONNECTIVE CORD, AUDIO CABLE
W072	4822 321 62513	CONNECTIVE CORD, COAX CODE

◇ MECHANISM PARTS LIST

002M	4822 502 21432	SCREW M1.4X5
003M	4822 417 11233	SUPPORT, HOLD PIECE R
004M	4822 464 51042	CHASSIS BLOCK UNIT
005M	4822 358 31272	CP BELT
006M	4822 532 52593	WASHER
007M	4822 417 11234	SUPPORT, HOLD PIECE L
008M	4822 502 21433	SCREW M1.4X2
009M	4822 691 20946	HEAD BLOCK UNIT
010M	4822 502 21434	SCREW M1.4X3
011M	4822 532 52594	NYRON WASHER
012M	4822 528 81532	P ROLLER ARM R UNIT
013M	4822 528 70834	P ROLLER ARM L UNIT
014M	4822 522 33486	CAN GEAR
015M	4822 403 71117	TRIGGER LEVER
016M	4822 492 42715	SPRING
017M	4822 532 52595	WASHER
018M	4822 502 21446	SCREW
019M	4822 532 52596	WASHER
020M		MECHA ESCUTCHEON
L001	4822 281 50183	SOLENOID COIL
M001	4822 361 21654	D.C.MOTOR

◆ ELECTRICAL PARTS LIST

P103 PCB MECH BOARD

CAPACITORS (ALL CHIPS) 0.001µF=1nF=1000PF

CM01				
∫	4822 126 11687	CERAMIC	0.1µF	+80%-20%
CM03				
CM04				
∫	4822 126 13697	CERAMIC	0.056µF	± 10%
CM06				
CM11	4822 126 12502	CERAMIC	820PF	± 10%
CM12	4822 126 11687	CERAMIC	0.1µF	+80%-20%
CM13	4822 126 13699	CERAMIC	0.082µF	± 10%
CM14	4822 126 11668	CERAMIC	220PF	± 5%
CM15	4822 126 11687	CERAMIC	0.1µF	+80%-20%
CM16	4822 125 60204	CERAMIC	0.027µF	± 10% 16V
CM21	4822 124 11431	TANTAL	10µF	10V
CM22	4822 124 41839	TANTAL	10µF	6.3V
CM25	5322 126 11578	CERAMIC	1000PF	± 10%
CM26	4822 125 60204	CERAMIC	0.027µF	± 10% 16V
CM27	4822 126 12495	CERAMIC	1500PF	± 10%
CM28	4822 126 11567	CERAMIC	0.022µF	± 10% 16V
CM29	5322 126 11578	CERAMIC	1000PF	± 10%
CM31	4822 124 11432	TANTAL	100µF	10V
CM32	4822 126 11687	CERAMIC	0.1µF	+80%-20%
CR01	4822 124 11434	TANTAL	2.2µF	± 20% 6.3V
CR03	4822 126 11668	CERAMIC	220PF	± 5%
CR06	4822 124 11434	TANTAL	2.2µF	± 20% 6.3V
CR08	4822 126 11668	CERAMIC	220PF	± 5%
CR21	4822 126 11687	CERAMIC	0.1µF	+80%-20%
CU11	4822 126 11687	CERAMIC	0.1µF	+80%-20%
CU12	4822 126 11687	CERAMIC	0.1µF	+80%-20%
C001	4822 126 11687	CERAMIC	0.1µF	+80%-20%
C002	4822 126 11687	CERAMIC	0.1µF	+80%-20%
C003	4822 126 11659	CERAMIC	3PF	± 0.25PF
C004	4822 126 13284	CERAMIC	0.18µF	+80 -20% 16V
C007	4822 126 13396	CERAMIC	0.047µF	± 10% 16V
C008	4822 126 11678	CERAMIC	1µF	+80%-20%
C009	4822 126 11678	CERAMIC	1µF	+80%-20%
C010				
∫	4822 126 11687	CERAMIC	0.1µF	+80%-20%
C012				
C013	5322 126 11578	CERAMIC	1000 PF	± 10% 50V
C017	4822 122 33788	CERAMIC	82PF	± 5%
C018	4822 126 11687	CERAMIC	0.1µF	+80%-20%
C019	4822 126 11687	CERAMIC	0.1µF	+80%-20%
C020	4822 122 33752	CERAMIC	15PF	± 5%
C101				
∫	4822 124 11428	TANTAL	1µF	6.3V
C120				
C121				
∫	5322 126 11583	CERAMIC	0.01µF	± 10%
C126				
C131				
∫	5322 126 11583	CERAMIC	0.01µF	± 10%
C142				
C143	4822 126 11568	CERAMIC	470PF	± 10%
C146				
∫	4822 124 41839	TANTAL	10µF	6.3V
C149				
C150	4822 124 11434	TANTAL	2.2µF	± 20% 6.3V
C151	4822 124 11428	TANTAL	1µF	6.3V
C152	4822 126 11687	CERAMIC	0.1µF	+80%-20%
C156	4822 124 41839	TANTAL	10µF	6.3V
C157	4822 126 11687	CERAMIC	0.1µF	+80%-20%
C158	4822 124 41839	TANTAL	10µF	6.3V

CAPACITORS (ALL CHIPS)

C159	4822 126 11687	CERAMIC	0.1µF	+80%-20%
C160	4822 124 41839	TANTAL	10µF	6.3V
C161	4822 126 11687	CERAMIC	0.1µF	+80%-20%
C162	4822 124 11438	TANTAL	4.7µF	6.3V
C163	4822 126 11687	CERAMIC	0.1µF	+80%-20%
C171	4822 126 11687	CERAMIC	0 .1µF	+80%-20% 35V
C172	4822 126 11687	CERAMIC	0 .1µF	+80%-20% 35V
C173	4822 126 12499	CERAMIC	0.47µF	+80%-20% 16V
C174	4822 126 12499	CERAMIC	0.47µF	+80%-20% 16V
C175	5322 126 11578	CERAMIC	1000PF	± 10%
C176	5322 126 11578	CERAMIC	1000PF	± 10%
C177	4822 126 12846	CERAMIC	0.012µF	± 10%
C178	4822 126 12846	CERAMIC	0.012µF	± 10%
C179	5322 126 11583	CERAMIC	0.01µF	± 10%
C180	5322 126 11583	CERAMIC	0.01µF	± 10%
C181	5322 126 13698	CERAMIC	8200PF	± 10%
C182	5322 126 13698	CERAMIC	8200PF	± 10%
C187				
∫	5322 126 11578	CERAMIC	1000PF	± 10%
C190				
C197	4822 122 33741	CERAMIC	10PF	± 0.5PF
C198	4822 122 33741	CERAMIC	10PF	± 0.5PF
C201	4822 126 11687	CERAMIC	0.1µF	+80%-20%
C202	4822 126 11687	CERAMIC	0.1µF	+80%-20%
C204				
∫	4822 126 11687	CERAMIC	0.1µF	+80%-20%
C206				
C207	4822 124 41839	TANTAL	10µF	6.3V

RESISTORS (ALL CHIPS)

RM01	4822 117 11308	2.2KΩ	± 5% 1/16W
RM02	4822 117 11308	2.2KΩ	± 5% 1/16W
RM03	4822 117 11311	220KΩ	± 5% 1/16W
RM04	4822 117 11325	56KΩ	± 5% 1/16W
RM05	4822 117 11318	390KΩ	± 5% 1/16W
RM06	4822 117 11328	68KΩ	± 5% 1/16W
RM11	4822 117 11301	12KΩ	± 5% 1/16W
RM12	4822 117 11315	33KΩ	± 5% 1/16W
RM13	4822 117 11303	15KΩ	± 5% 1/16W
RM14	4822 117 11297	100KΩ	± 5% 1/16W
RM15	4822 117 11322	47KΩ	± 5% 1/16W
RM16	4822 117 11322	47KΩ	± 5% 1/16W
RM17	4822 117 11302	1.5KΩ	± 5% 1/16W
RM18			
∫	4822 117 11869	0.56Ω	±10% 1/4W
RM20			
RM31	4822 117 11297	100KΩ	± 5% 1/16W
RM41	4822 117 11322	47KΩ	± 5% 1/16W
RM42	4822 117 11322	47KΩ	± 5% 1/16W
RM51	4822 117 11313	33Ω	± 5% 1/16W
RM52	4822 117 11322	47KΩ	± 5% 1/16W
RM53	4822 117 11321	4.7KΩ	± 5% 1/16W
RM54	4822 117 11313	33Ω	± 5% 1/16W
RR01	4822 117 11363	330Ω	± 5% 1/16W
RR02	4822 117 11321	4.7KΩ	± 5% 1/16W
RR03	4822 117 11368	680KΩ	± 5% 1/16W
RR04	4822 117 11311	220KΩ	± 5% 1/16W
RR05	4822 117 11368	680KΩ	± 5% 1/16W
RR11	4822 117 11363	330Ω	± 5% 1/16W
RR12	4822 117 11321	4.7KΩ	± 5% 1/16W
RR13	4822 117 11366	470KΩ	± 5% 1/16W
RR14	4822 117 11311	220KΩ	± 5% 1/16W
RR15	4822 117 11368	680KΩ	± 5% 1/16W
RR16	4822 117 11294	100Ω	± 5% 1/16W
RR17	4822 117 11294	100Ω	± 5% 1/16W

RESISTORS (ALL CHIPS) P103

RR18	4822 117 11366	470KΩ	± 5% 1/16W
RR19	4822 117 11366	470KΩ	± 5% 1/16W
RU12	4822 117 11309	22KΩ	± 5% 1/16W
RU13	4822 117 11309	22KΩ	± 5% 1/16W
RU15	4822 117 11309	22KΩ	± 5% 1/16W
RU16	4822 117 11322	47KΩ	± 5% 1/16W
RU17	4822 117 11322	47KΩ	± 5% 1/16W
R001	4822 117 11295	1KΩ	± 5% 1/16W
R002	4822 117 11296	10KΩ	± 5% 1/16W
R003	4822 117 11321	4.7KΩ	± 5% 1/16W
R008	4822 117 11359	180KΩ	± 5% 1/16W
R009	4822 117 11368	680KΩ	± 5% 1/16W
R010	4822 117 11297	100KΩ	± 5% 1/16W
R011	4822 117 11297	100KΩ	± 5% 1/16W
R012	4822 117 11768	82KΩ	± 5% 1/16W
R013	4822 117 11311	220KΩ	± 5% 1/16W
R014	4822 117 11322	47KΩ	± 5% 1/16W
R015	4822 117 11322	47KΩ	± 5% 1/16W
R016	4822 117 11309	22KΩ	± 5% 1/16W
R017	4822 117 11321	4.7KΩ	± 5% 1/16W
R018	4822 117 11296	10KΩ	± 5% 1/16W
R019	4822 117 11321	4.7KΩ	± 5% 1/16W
R021	4822 117 11296	10KΩ	± 5% 1/16W
R022	4822 117 11296	10KΩ	± 5% 1/16W
R023	4822 117 11298	1MΩ	± 5% 1/16W
R024	4822 117 11321	4.7KΩ	± 5% 1/16W
R033	4822 117 11309	22KΩ	± 5% 1/16W
R034	4822 117 11296	10KΩ	± 5% 1/16W
R101 ∫ R103	4822 117 11313	33Ω	± 5% 1/16W
R104	4822 117 11295	1KΩ	± 5% 1/16W
R115	4822 117 11831	18Ω	± 5% 1/16W
R116	4822 117 11831	18Ω	± 5% 1/16W
R117	4822 117 11318	390KΩ	± 5% 1/16W
R118	4822 117 11318	390KΩ	± 5% 1/16W
R119	4822 117 11326	560Ω	± 5% 1/6W
R120	4822 117 11326	560KΩ	± 5% 1/16W
R125	4822 117 11297	100KΩ	± 5% 1/16W
R126	4822 117 11297	100KΩ	± 5% 1/16W
R127	4822 100 12186	10KΩ	POTMETER
R128	4822 100 12186	10KΩ	POTMETER
R131	4822 117 11309	22KΩ	± 5% 1/16W
R132	4822 117 11309	22KΩ	± 5% 1/16W
R135	4822 117 11301	12KΩ	± 5% 1/16W
R136	4822 117 11301	12KΩ	± 5% 1/16W
R137	4822 117 11298	1MΩ	± 5% 1/16W
R138	4822 117 11298	1MΩ	± 5% 1/16W
R139	4822 117 11299	1.2KΩ	± 5% 1/16W
R140	4822 117 11299	1.2KΩ	± 5% 1/16W
R141	4822 117 11323	560Ω	± 5% 1/16W
R142	4822 117 11323	560 Ω	± 5% 1/16W
R147	4822 117 11309	22KΩ	± 5% 1/16W
R148	4822 117 11309	22KΩ	± 5% 1/16W
R149	4822 117 11311	220KΩ	± 5% 1/16W
R150	4822 117 11311	220KΩ	± 5% 1/16W
R151	4822 100 12187	2.2KΩ	POTMETER
R152	4822 100 12187	2.2KΩ	POTMETER
R176	4822 117 11296	10KΩ	± 5% 1/16W
R177	4822 117 11296	10KΩ	± 5% 1/16W
R201	4822 117 11311	220KΩ	± 5% 1/16W
R202	4822 117 11297	100KΩ	± 5% 1/16W
R203	4822 117 11297	100KΩ	± 5% 1/16W
R204	4822 117 11311	220KΩ	± 5% 1/16W
R205	4822 117 11303	15KΩ	± 5% 1/16W
R206	4822 117 11324	5.6KΩ	± 5% 1/16W
R207	4822 117 11303	15KΩ	± 5% 1/16W

RESISTORS (ALL CHIPS)

R208	4822 117 11296	10KΩ	± 5% 1/16W
R209	4822 117 11366	470KΩ	± 5% 1/16W
R210	4822 117 11327	6.8KΩ	± 5% 1/16W
R211	4822 100 12275	5KΩ	POTMETER
R212	4822 117 11322	47KΩ	± 5% 1/16W
R215	4822 117 11868	1Ω	± 5% 1/8W

SEMICONDUCTORS

DM01	4822 130 81324	DIODE	1SS302
DM02	4822 130 81324	DIODE	1SS302
D001 ∫ D003	4822 130 81324	DIODE	1SS302
QM01	4822 209 32621	IC, MOTOR DRIVER	NBC5800
QM02	4822 130 63842	DIGITAL TRANSISTOR	RN1603
QM03	4822 130 63609	TRANSISTOR	2SA1588
QM04	4822 130 63842	DIGITAL TRANSISTOR	RN1603
QM11 ∫ QM13	4822 130 42734	TRANSISTOR	2SB798
QR01	4822 209 33557	IC,	MC14069 UBDTEL
QR02	4822 130 63399	PHOTO UNIT REEL SENS,	GP2S27
QR03	4822 130 63399	PHOTO UNIT REEL SENS,	GP2S27
QU11	4822 130 63841	DIGITAL TRANSISTOR	RN1303
Q001	4822 209 33572	IC, MOTOR CONTROLLER	TC9192AF
Q002	4822 209 32984	IC,	TC7SU04F
Q003	4822 209 33563	IC, OP AMP	NJM2115V
Q004	4822 209 33563	IC, OP AMP	NJM2115V
Q005	4822 130 63847	DIGITAL TRANSISTOR	HN1B01F
Q006	4822 209 61747	IC,	TC4S66F
Q007	4822 209 31754	IC,	TC7S86F
Q008	4822 130 63842	DIGITAL TRANSISTOR	RN1603
Q009	4822 130 63841	DIGITAL TRANSISTOR	RN1303
Q010	4822 130 63618	FET	2SK880 (GR,BL)
Q011	4822 130 63841	DIGITAL TRANSISTOR	RN1303
Q101	4822 209 33558	IC, READ3	TDA1380
Q105	4822 130 63841	DIGITAL TRANSISTOR	RN1303
Q106	4822 130 63841	DIGITAL TRANSISTOR	RN1303
Q116	4822 130 63609	TRANSISTOR	2SA1588 (Y)
Q117	4822 209 33556	IC, V-REGULATOR 3.0V	RN5RG30A
Q118	4822 130 63609	TRANSISTOR	2SA1588 (Y)
Q119	4822 209 33556	IC, V-REGULATOR 3.0V	RN5RG30A
Q201	4822 209 33579	IC,	TDA1381 WRITE3
Q202	4822 130 63841	DIGITAL TRANSISTOR	RN1303

MISCELLANEOUS

J101	4822 265 51376	JACK, CE-235 26P
J102	4822 265 51376	JACK, CE-235 26P
J103	4822 265 61292	JACK, CE-235 36P
L101	4822 157 63437	ELJ-FA100J
L102	4822 157 63437	ELJ-FA100J
L201	4822 157 63437	ELJ-FA100J
SM03	4822 271 30848	MINI SWITCH
SU01	4822 277 21752	SLIDE SWITCH
SU02	4822 276 13531	PUSH SWITCH
SU04	4822 276 13531	PUSH SWITCH

P503 PCB MAIN BOARD

CAPACITORS (ALL CHIPS)

CA01	4822 122 32671	TANTAL	0.1µF	35V
CA02 ∫ CA04	4822 126 11687	CERAMIC	0.1µF	+80%-20%
CA05	4822 126 11668	CERAMIC	220PF	± 5%
CA06	4822 125 60221	CERAMIC	0.033µF	± 10%
CA07	4822 122 32679	TANTAL	0.33µF	35V
CA11 ∫ CA14	4822 126 11687	CERAMIC	0.1µF	+80%-20%
CA16	4822 124 11438	TANTAL	4.7µF	6.3V
CA17	4822 122 33744	CERAMIC	100PF	± 5%
CA18	4822 126 11678	CERAMIC	1µF	+80%-20%
CA21	4822 124 11438	TANTAL	4.7µF	6.3V
CA26	4822 124 11438	TANTAL	4.7µF	6.3V
CA27	4822 124 11438	TANTAL	4.7µF	6.3V
CA61	4822 126 11687	CERAMIC	0.1µF	+80%-20%
CA65 ∫ CA67	4822 126 11687	CERAMIC	0.1µF	+80%-20%
CC01 ∫ CC03	4822 126 11678	CERAMIC	1µF	+80%-20%
CH01	4822 126 11678	CERAMIC	1µF	+80%-20%
CH02	4822 126 11678	CERAMIC	1µF	+80%-20%
CH03	4822 124 11435	TANTAL	22µF	6.3V
CH04	4822 126 13699	CERAMIC	0.082µF	± 10% 16V
CH07	5322 126 11578	CERAMIC	1000PF	± 10%
CH08	5322 126 11578	CERAMIC	1000PF	± 10%
CH09	4822 124 11438	TANTAL	4.7µF	6.3V
CH11	4822 124 11431	TANTAL	10µF	10V
CH12	4822 124 11431	TANTAL	10µF	10V
CH13	4822 126 11679	CERAMIC	0.22µF	+80 -20% 16V
CH14	4822 126 13699	CERAMIC	0.082µF	± 10% 16V
CH15	4822 126 11679	CERAMIC	0.22µF	+80 -20% 16V
CH16	4822 124 11435	TANTAL	22µF	6.3V
CH18	4822 124 11438	TANTAL	4.7µF	6.3V
CH19	5322 126 11578	CERAMIC	1000PF	± 10%
CH21	4822 124 11396	TANTAL	220µF	4V
CH22	4822 124 11396	TANTAL	220µF	4V
CH31	4822 126 11687	CERAMIC	0.1µF	+80%-20%
CH41	4822 124 11432	TANTAL	100µF	10V
CH51	5322 126 11583	CERAMIC	0.01µF	± 10%
CH52	5322 126 11583	CERAMIC	0.01µF	± 10%
CH53	4822 126 11678	CERAMIC	1µF	+80%-20%
CL01	5322 126 11583	CERAMIC	0.01µF	± 10%
CU01	4822 126 11687	CERAMIC	0.1µF	+80%-20%
CU02	4822 124 11435	TANTAL	22µF	6.3V ± 20%
CU21 ∫ CU23	4822 126 11678	CERAMIC	1µF	+80%-20%
CU24	5322 126 11583	CERAMIC	0.01µF	± 10%
CU26	4822 126 11687	CERAMIC	0.1µF	+80%-20%
CU31	5322 126 11578	CERAMIC	1000PF	± 10%
CU32	5322 126 11578	CERAMIC	1000PF	± 10%
CU33	4822 126 11687	CERAMIC	0.1µF	+80%-20%
CU51	4822 126 11687	CERAMIC	0.1µF	+80%-20%
CU52	5322 126 11583	CERAMIC	0.01µF	± 10%
CU53	5322 126 11583	CERAMIC	0.01µF	± 10%
C301	5322 126 11583	CERAMIC	0.01µF	± 10%
C302	4822 126 11678	CERAMIC	1µF	+80%-20%
C306	4822 124 81234	TANTAL	220µF	6.3V
C311	4822 124 11438	TANTAL	4.7µF	6.3V
C312	4822 124 11438	TANTAL	4.7µF	6.3V

CAPACITORS (ALL CHIPS)

C313	4822 122 33744	CERAMIC	100PF	± 5%
C314	4822 122 33744	CERAMIC	100PF	± 5%
C315	4822 122 33761	CERAMIC	22PF	± 5%
C316	4822 122 33761	CERAMIC	22PF	± 5%
C317	4822 124 41839	TANTAL	10µF	6.3V
C318	4822 124 41839	TANTAL	10µF	6.3V
C319	4822 126 11687	CERAMIC	0.1µF	+80%-20%
C320	4822 126 11687	CERAMIC	0.1µF	+80%-20%
C331 ∫ C334	4822 124 11438	TANTAL	4.7µF	6.3V
C335	4822 122 33761	CERAMIC	22PF	± 5%
C336	4822 122 33761	CERAMIC	22PF	± 5%
C361	4822 126 11678	CERAMIC	1µF	+80%-20% (F)
C362	4822 126 11678	CERAMIC	1µF	+80%-20% (F)
C363	4822 126 11687	CERAMIC	0.1µF	+80%-20%
C364	4822 126 11687	CERAMIC	0.1µF	+80%-20%
C371	4822 124 11438	TANTAL	4.7µF	6.3V
C372	4822 124 11438	TANTAL	4.7µF	6.3V
C373	4822 124 11434	TANTAL	2.2µF	6.3V
C374	4822 124 11434	TANTAL	2.2µF	6.3V
C375	4822 124 11438	TANTAL	4.7µF	6.3V
C376	4822 124 11438	TANTAL	4.7µF	6.3V
C381	4822 124 11435	TANTAL	22µF	6.3V ± 20%
C383	4822 126 11678	CERAMIC	1µF	+80%-20% (F)
C384	4822 126 11678	CERAMIC	1µF	+80%-20% (F)
C385 ∫ C388	4822 124 11438	TANTAL	4.7µF	6.3V
C389	4822 122 33744	CERAMIC	100PF	± 5%
C390	4822 122 33744	CERAMIC	100PF	± 5%
C391	4822 124 11438	TANTAL	4.7µF	6.3V
C392	4822 126 11687	CERAMIC	0.1µF	+80%-20%
C393	4822 126 11679	CERAMIC	0.22µF	+80%-20% 16V
C394	4822 126 11679	CERAMIC	0.22µF	+80 -20% 16V
C401	4822 124 11438	TANTAL	4.7µF	6.3V
C402	4822 126 11687	CERAMIC	0.1µF	+80%-20%
C403	4822 126 11679	CERAMIC	0.22µF	+80%-20% 16V
C404	4822 126 11687	CERAMIC	0.1µF	+80%-20%
C405	4822 126 11687	CERAMIC	0.1µF	+80%-20%
C407	4822 123 30414	MICA	680PF	± 5%
C408	4822 123 30414	MICA	680PF	± 5%
C409	4822 124 11435	TANTAL	22µF	6.3V ± 20%
C410 ∫ C412	4822 124 11438	TANTAL	4.7µF	6.3V
C413	4822 123 30413	MICA	2700PF	± 5%
C414	4822 123 30413	MICA	2700PF	± 5%
C415	4822 123 30412	MICA	100PF	± 5%
C416	4822 123 30412	MICA	100PF	± 5%
C418	4822 124 11435	TANTAL	22µF	6.3V ± 20%
C419	4822 124 11435	TANTAL	22µF	6.3V ± 20%
C421	4822 124 11438	TANTAL	4.7µF	6.3V
C422	4822 124 11438	TANTAL	4.7µF	6.3V
C431	4822 124 81235	TANTAL	0.68µF	35V
C441	4822 122 33744	CERAMIC	100 PF	± 5% 50V
C442	4822 122 33744	CERAMIC	100 PF	± 5% 50V
C501	4822 122 33788	CERAMIC	82PF	± 5%
C502	4822 126 11687	CERAMIC	0.1µF	+80%-20%
C505 ∫ C512	4822 126 11687	CERAMIC	0.1µF	+80%-20%
C516	4822 124 11438	TANTAL	4.7µF	1/16W
C521	4822 126 11687	CERAMIC	0.1µF	+80%-20%
C551 ∫ C554	4822 122 33741	CERAMIC	10PF	± 0.5PF

CAPACITORS (ALL CHIPS) P503

C555				
∫	4822 126 11687	CERAMIC	0.1µF	+80%-20%
C557				
C561	4822 124 11438	TANTAL	4.7µF	1/16W
C601	4822 126 11687	CERAMIC	0.1µF	+80%-20%
C602	4822 126 11687	CERAMIC	0.1µF	+80%-20%
C603	4822 126 11678	CERAMIC	1µF	+80%-20%
C604	4822 126 11687	CERAMIC	0.1µF	+80%-20%
C605	4822 126 11687	CERAMIC	0.1µF	+80%-20%
C701	4822 126 11678	CERAMIC	1µF	+80%-20%
C702	4822 126 11678	CERAMIC	1µF	+80%-20%
C703	4822 125 60221	CERAMIC	0.033µF	± 10%
C704	4822 125 60221	CERAMIC	0.033µF	± 10%
C705	4822 126 11685	CERAMIC	4700PF	± 10%
C706	4822 126 11685	CERAMIC	4700PF	± 10%
C707	5322 126 11583	CERAMIC	0.01µF	± 10%
C708	5322 126 11583	CERAMIC	0.01µF	± 10%
C709	4822 125 60221	CERAMIC	0.033µF	± 10%
C710	4822 125 60221	CERAMIC	0.033µF	± 10%
C711	4822 126 11687	CERAMIC	0.1µF	+80%-20%
C712	4822 126 11687	CERAMIC	0.1µF	+80%-20%
C713	4822 124 11435	TANTAL	22µF	6.3V
C714	4822 124 11435	TANTAL	22µF	6.3V
C721	5322 126 11579	CERAMIC	3300PF	± 10%
C722	5322 126 11579	CERAMIC	3300PF	± 10%
C801				
∫	4822 124 11431	TANTAL	10µF	10V
C803				
C804	4822 126 11678	CERAMIC	1µF	+80%-20% (F)
C806	4822 122 33753	CERAMIC	150PF	± 5%
C807				
∫	4822 126 11687	CERAMIC	0.1µF	+80%-20%
C809				
C811				
∫	4822 126 11687	CERAMIC	0.1µF	+80%-20%
C813				
C816	4822 126 11687	CERAMIC	0.1µF	+80%-20%
C817	4822 124 81233	TANTAL	150µF	10V
C818	4822 124 11431	TANTAL	10µF	10V
C819	4822 122 33753	CERAMIC	150PF	± 5%
C821	4822 122 33753	CERAMIC	150PF	± 5%
C822	4822 124 81234	TANTAL	220µF	6.3V
C823	4822 124 11435	TANTAL	22µF	6.3V
C826	4822 126 11687	CERAMIC	0.1µF	+80%-20%
C827	4822 126 11678	CERAMIC	1µF	+80%-20% (F)

RESISTORS (ALL CHIPS)

RA01	4822 117 11362	270Ω	± 5% 1/16W
RA06	4822 117 11296	10KΩ	± 5% 1/16W
RA07	4822 117 11322	47KΩ	± 5% 1/16W
RA10	4822 117 11296	10KΩ	± 5% 1/16W
RA11	4822 117 11357	150Ω	± 5% 1/16W
RA12	4822 117 11357	150Ω	± 5% 1/16W
RA13	4822 117 11298	1MΩ	± 5% 1/16W
RA15	4822 117 11321	4.7KΩ	± 5% 1/16W
RA16	4822 117 11863	22Ω	± 5% 1/16W
RA17	4822 117 11322	47KΩ	± 5% 1/16W
RA18	4822 117 11294	100Ω	± 5% 1/16W
RA21	4822 117 11863	22Ω	± 5% 1/16W
RA25	4822 117 11322	47KΩ	± 5% 1/16W
RA26	4822 111 91364	3.9KΩ	± 1% 1/10W
RA27	4822 116 82573	22KΩ	± 1% 1/10W
RA28	4822 117 11322	47KΩ	± 5% 1/16W
RA29	4822 117 11321	4.7KΩ	± 5% 1/16W
RA30	4822 117 11296	10KΩ	± 5% 1/16W
RA51	4822 117 11321	4.7KΩ	± 5% 1/16W
RA52	4822 117 11321	4.7KΩ	± 5% 1/16W

RESISTORS (ALL CHIPS)

RA53			
∫	4822 117 11864	220Ω	± 5% 1/16W
RA57			
RA59			
∫	4822 117 11864	220Ω	± 5% 1/16W
RA61			
RC01	4822 117 11295	1KΩ	± 5% 1/16W
RC02	4822 117 11341	1.5Ω	± 5% 1W
RC03	4822 117 11295	1KΩ	± 5% 1/16W
RC04	4822 117 11294	100Ω	± 5% 1/16W
RC05	4822 117 11321	4.7KΩ	± 5% 1/16W
RC06	4822 117 11304	150KΩ	± 5% 1/16W
RC07	4822 117 11297	100KΩ	± 5% 1/16W
RC08	4822 117 11296	10KΩ	± 5% 1/16W
RC09	4822 117 11322	47KΩ	± 5% 1/16W
RC10	4822 117 11321	4.7KΩ	± 5% 1/16W
RC11	4822 117 11309	22KΩ	± 5% 1/16W
RC12	4822 117 11312	27KΩ	± 5% 1/16W
RC13	4822 117 11319	470Ω	± 5% 1/16W
RH01	4822 101 30847	VARIABLE, VR 20K (C)X2	
RH03	4822 117 11303	15KΩ	± 5% 1/16W
RH04	4822 117 11303	15KΩ	± 5% 1/16W
RH05	4822 117 11297	100KΩ	± 5% 1/16W
RH06	4822 117 11297	100KΩ	± 5% 1/16W
RH09	4822 117 11309	22KΩ	± 5% 1/16W
RH10	4822 117 11309	22KΩ	± 5% 1/16W
RH11	4822 117 11327	6.8KΩ	± 5% 1/16W
RH12	4822 117 11324	5.6KΩ	± 5% 1/16W
RH15	4822 117 11295	1KΩ	± 5% 1/16W
RH16	4822 117 11295	1KΩ	± 5% 1/16W
RH17			
∫	4822 117 11293	10Ω	± 5% 1/16W
RH20			
RH21	4822 117 11338	4.7Ω	± 5% 1/16W
RH22	4822 117 11338	4.7Ω	± 5% 1/16W
RH25			
∫	4822 117 11295	1KΩ	± 5% 1/16W
RH28			
RH31	4822 117 11302	1.5KΩ	± 5% 1/16W
RH32	4822 117 11302	1.5KΩ	± 5% 1/16W
RH41	4822 117 11322	47KΩ	± 5% 1/16W
RH42	4822 117 11321	4.7KΩ	v1/16W
RL02	4822 117 11294	100Ω	± 5% 1/16W
RL03	4822 117 11322	47KΩ	± 5% 1/16W
RL04	4822 117 11292	0Ω	
RL05	4822 117 11292	0Ω	
RL11	4822 117 11315	33KΩ	± 5% 1/16W
RL12	4822 117 11325	56KΩ	± 5% 1/16W
RL13	4822 117 11301	12KΩ	± 5% 1/16W
RL14	4822 117 11315	33KΩ	± 5% 1/16W
RL15	4822 117 11315	33KΩ	± 5% 1/16W
RL21	4822 117 11322	47KΩ	± 5% 1/16W
RL22	4822 117 11321	4.7KΩ	± 5% 1/16W
RL23	4822 117 11293	10Ω	± 5% 1/16W
RU01	4822 117 11298	1MΩ	± 5% 1/16W
RU18	4822 117 11297	100KΩ	± 5% 1/16W
RU19	4822 117 11297	100KΩ	± 5% 1/16W
RU21	4822 117 11298	1MΩ	± 5% 1/16W
RU22	4822 117 11298	1MΩ	± 5% 1/16W
RU23	4822 117 11312	27KΩ	± 5% 1/16W
RU24	4822 117 11297	100KΩ	± 5% 1/16W
RU25	4822 117 11308	2.2KΩ	± 5% 1/16W
RU26	4822 117 11298	1MΩ	± 5% 1/16W
RU27	4822 117 11297	100KΩ	± 5% 1/16W
RU31	4822 117 11322	47KΩ	± 5% 1/16W
RU32	4822 117 11322	47KΩ	± 5% 1/16W
RU36	4822 117 11323	560Ω	± 5% 1/16W

RU51	4822 100 12274	100KΩ	POTMETER
RU52	4822 117 11296	10KΩ	± 5% 1/16W
RU61	4822 117 11322	47KΩ	± 5% 1/16W
RU62	4822 117 11321	4.7KΩ	± 5% 1/16W
RU63	4822 117 11297	100KΩ	± 5% 1/16W
RU64	4822 117 11292	0Ω	± 5% 1/16W
RU71 ∫ RU74	4822 117 11311	220KΩ	± 5% 1/16W
RU75 ∫ RU77	4822 117 11296	10KΩ	± 5% 1/16W
RU78	4822 117 11424	120KΩ	± 5% 1/16W
RU79	4822 117 11424	120KΩ	± 5% 1/16W
RU81 ∫ RU83	4822 117 11311	220KΩ	± 5% 1/16W
RU84	4822 117 11296	10KΩ	± 5% 1/16W
RU85	4822 117 11296	10KΩ	± 5% 1/16W
RU86	4822 117 11424	120KΩ	± 5% 1/16W
R300	4822 117 11309	22KΩ	± 5% 1/16W
R301	4822 117 11297	100KΩ	± 5% 1/16W
R302	4822 117 11297	100KΩ	± 5% 1/16W
R303	4822 117 11309	22KΩ	± 5% 1/16W
R304	4822 117 11297	100KΩ	± 5% 1/16W
R305	4822 117 11297	00KΩ	± 5% 1/16W
R306	4822 117 11317	39KΩ	± 5% 1/16W
R307 ∫ R309	4822 117 11322	47KΩ	± 5% 1/16W
R310	4822 117 11297	100KΩ	± 5% 1/16W
R311	4822 117 11303	15KΩ	± 5% 1/16W
R312	4822 117 11303	15KΩ	± 5% 1/16W
R313	4822 117 11308	2.2KΩ	± 5% 1/16W
R314	4822 117 11308	2.2KΩ	± 5% 1/16W
R315	4822 117 11371	8.2KΩ	± 5% 1/16W
R316	4822 117 11371	8.2KΩ	± 5% 1/16W
R317	4822 117 11299	1.2KΩ	± 5% 1/16W
R318	4822 117 11299	1.2KΩ	± 5% 1/16W
R319	4822 117 11305	18KΩ	± 5% 1/16W
R320	4822 117 11305	18KΩ	± 5% 1/16W
R321	4822 117 11311	220KΩ	± 5% 1/16W
R322	4822 117 11311	220KΩ	± 5% 1/16W
R323	4822 117 11315	33KΩ	± 5% 1/16W
R324	4822 117 11315	33KΩ	± 5% 1/16W
R326	4822 101 30847	VARIABLE, VR 20K (C)X2	
R327	4822 117 11311	220KΩ	± 5% 1/16W
R328	4822 117 11311	220KΩ	± 5% 1/16W
R331	4822 117 11322	47KΩ	± 5% 1/16W
R332	4822 117 11322	47KΩ	± 5% 1/16W
R333	4822 117 11367	68Ω	± 5% 1/16W
R334	4822 117 11367	68Ω	± 5% 1/16W
R335 ∫ R338	4822 117 11295	1KΩ	± 5% 1/16W
R339	4822 117 11321	4.7KΩ	± 5% 1/16W
R340	4822 117 11321	4.7KΩ	± 5% 1/16W
R341 ∫ R344	4822 117 11296	10KΩ	± 5% 1/16W
R345	4822 117 11315	33KΩ	± 5% 1/16W
R346	4822 117 11315	33KΩ	± 5% 1/16W
R347	4822 117 11369	820Ω	± 5% 1/16W
R348	4822 117 11369	820Ω	± 5% 1/16W
R349	4822 117 11371	8.2KΩ	± 5% 1/16W
R350	4822 117 11371	8.2KΩ	± 5% 1/16W
R351	4822 117 11303	15KΩ	± 5% 1/16W
R352	4822 117 11303	15KΩ	± 5% 1/16W

R353	4822 117 11305	18KΩ	± 5% 1/16W
R354	4822 117 11305	18KΩ	± 5% 1/16W
R355	4822 117 11295	1KΩ	± 5% 1/16W
R356	4822 117 11295	1KΩ	± 5% 1/16W
R357	4822 117 11297	100KΩ	± 5% 1/16W
R358	4822 117 11296	10KΩ	± 5% 1/16W
R360	4822 117 11292	0Ω	± 5%
R361	4822 117 11424	120KΩ	± 5% 1/16W
R362	4822 117 11424	120KΩ	± 5% 1/16W
R363	4822 117 11326	560KΩ	± 5% 1/16W
R364	4822 117 11326	560KΩ	± 5% 1/16W
R365	4822 117 11296	10KΩ	± 5% 1/16W
R366	4822 117 11296	10KΩ	± 5% 1/16W
R367	4822 117 11295	1KΩ	± 5% 1/16W
R368	4822 117 11295	1KΩ	± 5% 1/16W
R369	4822 117 11311	220KΩ	± 5% 1/16W
R371	4822 117 11301	12KΩ	± 5% 1/16W
R372	4822 117 11292	0Ω	
R373	4822 117 10154	10MΩ	± 5% 1/16W
R374	4822 117 11294	100Ω	± 5% 1/16W
R375	4822 117 11322	47KΩ	± 5% 1/16W
R376	4822 117 11298	1MΩ	± 5% 1/16W
R377	4822 117 11294	100Ω	± 5% 1/16W
R378	4822 117 11424	120KΩ	± 5% 1/16W
R379	4822 117 10154	10MΩ	± 5% 1/16W
R380	4822 117 11292	0Ω	± 5% 1/16W
R381	4822 117 11309	22KΩ	± 5% 1/16W
R382	4822 117 11309	22KΩ	± 5% 1/16W
R385	4822 117 11296	10KΩ	± 5% 1/16W
R386	4822 117 11296	10KΩ	± 5% 1/16W
R387	4822 117 11322	47KΩ	± 5% 1/16W
R388	4822 117 11322	47KΩ	± 5% 1/16W
R389	4822 117 11305	18KΩ	± 5% 1/16W
R390	4822 117 11305	18KΩ	± 5% 1/16W
R391	4822 117 11364	3.9KΩ	± 5% 1/16W
R392	4822 117 11364	3.9KΩ	± 5% 1/16W
R393	4822 117 11321	4.7KΩ	± 5% 1/16W
R394	4822 117 11321	4.7KΩ	± 5% 1/16W
R397	4822 117 11309	22KΩ	± 5% 1/16W
R398	4822 117 11309	22KΩ	± 5% 1/16W
R401	4822 117 11312	27KΩ	± 5% 1/16W
R402	4822 117 11322	47KΩ	± 5% 1/16W
R406	4822 117 11296	10KΩ	± 5% 1/16W
R411	4822 117 11303	15KΩ	± 5% 1/16W
R412	4822 117 11303	15KΩ	± 5% 1/16W
R413	4822 117 11398	680Ω	± 5% 1/16W
R414	4822 117 11398	680Ω	± 5% 1/16W
R415	4822 117 11315	33KΩ	± 5% 1/16W
R416	4822 117 11315	33KΩ	± 5% 1/16W
R417	4822 117 11309	22KΩ	± 5% 1/16W
R418	4822 117 11309	22KΩ	± 5% 1/16W
R419	4822 117 11294	100Ω	± 5% 1/16W
R421	4822 117 11322	47KΩ	± 5% 1/16W
R422	4822 117 11322	47KΩ	± 5% 1/16W
R423 ∫ R426	4822 117 11864	220Ω	± 5% 1/16W
R427 ∫ R430	4822 117 11308	2.2KΩ	± 5% 1/16W
R431	4822 117 11294	100Ω	± 5% 1/16W
R432	4822 117 11294	100Ω	± 5% 1/16W
R441	4822 117 11328	68KΩ	± 5% 1/16W
R442	4822 117 11361	2.2MΩ	± 5% 1/16W
R443	4822 117 11312	27KΩ	± 5% 1/16W
R501	4822 117 11862	120Ω	± 5% 1/16W
R502	4822 117 11315	33KΩ	± 5% 1/16W
R511	4822 117 11308	2.2KΩ	± 5% 1/16W

RESISTORS (ALL CHIPS) P503

R512	4822 117 11308	2.2KΩ	± 5% 1/16W
R551	4822 117 11298	1MΩ	± 5% 1/16W
R552	4822 117 11864	220Ω	± 5% 1/16W
R553	4822 117 11298	1MΩ	± 5% 1/16W
R554	4822 117 11864	220Ω	± 5% 1/16W
R556	4822 117 11864	220Ω	± 5% 1/16W\
R557	4822 117 11864	220Ω	± 5% 1/16W
R601	4822 117 11304	150KΩ	± 5% 1/16W
R701	4822 117 11322	47KΩ	± 5% 1/16W
R702	4822 117 11322	47KΩ	± 5% 1/16W
R703	4822 117 11314	3.3KΩ	± 5% 1/16W
R704	4822 117 11314	3.3KΩ	± 5% 1/16W
R705	4822 117 11316	330KΩ	± 5% 1/16W
R706	4822 117 11316	330KΩ	± 5% 1/16W
R707	4822 117 11329	820KΩ	± 5% 1/16W
R708	4822 117 11329	820KΩ	± 5% 1/16W
R711	4822 117 11297	100KΩ	± 5% 1/16W
R712	4822 117 11297	100KΩ	± 5% 1/16W
R717	4822 117 11293	10Ω	± 5% 1/16W
R721	4822 117 11321	4.7KΩ	± 5% 1/16W
R722	4822 117 11321	4.7KΩ	± 5% 1/16W
R723	4822 117 11295	1KΩ	± 5% 1/16W
R724	4822 117 11295	1KΩ	± 5% 1/16W
R806	4822 117 11301	12KΩ	± 5% 1/16W
R807	4822 116 82735	7.5KΩ	± 1% 1/10W
R808	4822 117 11337	4.7KΩ	± 1% 1/10W
R809	4822 117 11315	33KΩ	± 5% 1/16W
R810	4822 117 11296	10KΩ	± 5% 1/16W
R811	4822 117 11311	220KΩ	± 5% 1/16W
R812	4822 117 11315	33KΩ	± 5% 1/16W
R813	4822 111 90883	10KΩ	± 1% 1/10W
R814	4822 117 10147	47KΩ	± 5% 1/10W
R815	4822 117 11315	33KΩ	± 5% 1/16W
R816	4822 117 11309	22KΩ	± 5% 1/16W
R817	4822 117 11356	130KΩ	± 1% 1/10W
R818	4822 116 80974	91KΩ	± 5% 1/10W
R821	4822 117 11321	4.7KΩ	± 5% 1/16W
R822	4822 117 11321	4.7KΩ	± 5% 1/16W
R826	4822 117 11294	100Ω	± 5% 1/16W
R827	4822 117 11863	22Ω	± 5% 1/16W
R828	4822 117 11322	47KΩ	± 5% 1/16W
R829	4822 117 11296	10KΩ	± 5% 1/16W
R831	4822 117 11863	22Ω	± 5% 1/16W
R832	4822 117 11294	100Ω	± 5% 1/16W
R835	4822 117 11863	22Ω	± 5% 1/16W
R836	4822 117 11863	22Ω	± 5% 1/16W
R841	4822 117 11309	22KΩ	± 5% 1/16W
R842	4822 117 11297	100KΩ	± 5% 1/16W
R843	4822 117 11322	47KΩ	± 5% 1/16W

SEMICONDUCTORS (ALL CHIPS)

DC01	4822 130 83718	DIODE	EC15QS02L 1.3A
DC02	4822 130 83718	DIODE	EC15QS02L 1.3A
DC03	5322 130 83285	DIODE	1SS322
DH01	4822 130 81324	DIODE	1SS302
DH02	4822 130 81324	DIODE	1SS302
DH05	4822 130 83721	DIODE	1SS300
DH06	4822 130 83721	DIODE	1SS300
DH11	4822 130 83715	DIODE	1SS301
DU31	4822 130 83715	DIODE	1SS301
DU32	4822 130 83715	DIODE	1SS301
DU36	4822 130 83715	DIODE	1SS301
DU51	4822 130 83715	DIODE	1SS301
D311	4822 130 83721	DIODE	1SS300
D312	4822 130 83721	DIODE	1SS300
D316	4822 130 83715	DIODE	1SS301
D331	4822 130 81324	DIODE	1SS302
D332	4822 130 81324	DIODE	1SS302

SEMICONDUCTORS (ALL CHIPS)

D333	4822 130 83721	DIODE	1SS300
D361	4822 130 81324	DIODE	1SS302
D362	4822 130 81324	DIODE	1SS302
D371	4822 130 83721	DIODE	1SS300
D372	5322 130 83285	DIODE	1SS322
D391	4822 130 83721	DIODE	1SS300
D421	4822 130 83721	DIODE	1SS300
D422	4822 130 83721	DIODE	1SS300
D431	4822 130 81324	DIODE	1SS302
D441	5322 130 83285	DIODE	1SS322
D601	4822 130 81324	DIODE	1SS302
D806	4822 130 82452	DIODE	MA720
D811	4822 130 82452	DIODE	MA720
D821	4822 130 81324	DIODE	1SS302
QA01	4822 209 33578	IC, DAIO	TDA1315
QA02	4822 209 61751	IC, OR	TC7S32F
QA03	4822 130 63841	DIGITAL TRANSISTOR	RN1303
QA11	4822 130 63845	DIGITAL TRANSISTOR	RN1310
QA12	4822 130 63839	DIGITAL TRANSISTOR	RN2603
QA13	4822 130 61541	TRANSISTOR	2SC4116 (GR)
QA26	4822 130 63609	TRANSISTOR	2SA1588 (Y)
QA27	4822 209 33556	IC, V-REGULATOR 3.0V	RN5RG30A
QA28	4822 130 63609	TRANSISTOR	2SA1588 (Y)
QA29	4822 130 63848	DIGITAL TRANSISTOR	RN4603
QA30	4822 130 63841	DIGITAL TRANSISTOR	RN1303
QA51	4822 209 90598	IC,	TC7W126FU
QA52	4822 209 90597	IC,	TC7W125FU
QA53	4822 209 90598	IC,	TC7W126FU
QA54	4822 209 90598	IC,	TC7W125FU
QC01	4822 130 43954	TRANSISTOR	2SD999
QC02	4822 130 61541	TRANSISTOR	2SC4116 (GR)
QC03	4822 130 63842	DIGITAL TRANSISTOR	RN1603
QC04	4822 130 63841	DIGITAL TRANSISTOR	RN1303
QC05	4822 130 61554	TRANSISTOR	2SA1586 (Y,G)
QH01	4822 209 32583	IC, HEAD PHON DRIVER	BA3570FS
QH11	4822 130 63844	DIGITAL TRANSISTOR	HN1C03F(B)
QH12	4822 130 63844	DIGITAL TRANSISTOR	HN1C03F(B)
QH16	4822 130 63848	DIGITAL TRANSISTOR	RN4603
QH41	4822 130 63609	TRANSISTOR	2SA1588 (Y)
QH42	4822 130 63841	DIGITAL TRANSISTOR	RN1303
QL01	4822 130 63848	DIGITAL TRANSISTOR	RN4603
QL02	4822 130 63848	DIGITAL TRANSISTOR	RN4603
QU01	4822 209 90601	UPD78058GC-3B9 (U-COM)	
QU02	4822 209 33571	IC, V-REGULATOR 3.3V	RN5RL33A
QU03	4822 209 33569	IC, V-DETECTOR 2.7V	RN5VL27C
QU21	4822 209 33573	IC, INVERTER	TC7W14F
QU22	4822 209 63557	IC, TAPING	TC7S08F
QU23	4822 209 33581	IC,	TC7W08F
QU24	4822 130 63609	TRANSISTOR	2SA1588 (Y)
QU36	4822 111 92183	DIGITAL TRANSISTOR	RN2303
QU37	4822 130 63848	DIGITAL TRANSISTOR	RN4603
QU41	4822 130 63609	TRANSISTOR	2SA1588 (Y)
QU42	4822 130 63841	DIGITAL TRANSISTOR	RN1303
QU51	4822 130 63839	DIGITAL TRANSISTOR	RN2603
Q301	4822 130 63838	DIGITAL TRANSISTOR	HN1A01F
Q302	4822 130 63838	DIGITAL TRANSISTOR	HN1A01F
Q306	4822 130 63609	TRANSISTOR	2SA1588(Y)
Q307	4822 130 63841	DIGITAL TRANSISTOR	RN1303
Q308	4822 130 63845	DIGITAL TRANSISTOR	RN1310
Q311	4822 130 63618	FET	2SK880 (GR,BL)
Q312	4822 130 63618	FET	2SK880 (GR,BL)
Q313	4822 130 63846	DIGITAL TRANSISTOR	RN1610
Q314	4822 130 63846	DIGITAL TRANSISTOR	RN1610
Q316	4822 209 33563	IC, OP-AMP	NJM2115V
Q331	4822 130 63844	DIGITAL TRANSISTOR	HN1C03F(B)
Q332	4822 130 63843	DIGITAL TRANSISTOR	HN1C01F(G)

SEMICONDUCTORS (ALL CHIPS) P503

Q333	4822 130 61541	TRANSISTOR	2SC4116 (GR)
Q334	4822 130 61541	TRANSISTOR	2SC4116 (GR)
Q335	4822 130 63845	DIGITAL TRANSISTOR	RN1310
Q336	4822 130 63845	DIGITAL TRANSISTOR	RN1310
Q338	4822 209 33563	IC, OP-AMP	NJM2115V
Q339	4822 130 63618	FET	2SK880 (GR,BL)
Q340	4822 130 63618	FET	2SK880 (GR,BL)
Q361	4822 130 63845	DIGITAL TRANSISTOR	RN1310
Q362	4822 130 63845	DIGITAL TRANSISTOR	RN1310
Q363	4822 130 61541	TRANSISTOR	2SC4116 (GR)
Q364	4822 130 61541	TRANSISTOR	2SC4116 (GR)
Q371	4822 130 63847	DIGITAL TRANSISTOR	HN1B01F
Q372	4822 130 63848	DIGITAL TRANSISTOR	RN4603
Q373	4822 130 61554	TRANSISTOR	2SA1586 (Y,GR)
Q374	4822 130 63845	DIGITAL TRANSISTOR	RN1310
Q381	4822 209 33563	IC, OP-AMP	NJM2115V
Q385	4822 130 63844	DIGITAL TRANSISTOR	HN1C03F(B)
Q391	4822 209 33577	IC, LOVAC	TDA1309
Q401	4822 130 63841	DIGITAL TRANSISTOR	RN1303
Q403	4822 209 33563	IC, OP-AMP	NJM2115V
Q406	4822 130 63609	TRANSISTOR	2SA1588 (Y)
Q407	4822 209 33556	IC, V-REGULATOR 3.0V	RN5RG30A
Q421	4822 130 63844	DIGITAL TRANSISTOR	HN1C03F(B)
Q422	4822 130 63844	DIGITAL TRANSISTOR	HN1C03F(B)
Q441	4822 130 63848	DIGITAL TRANSISTOR	RN4603
Q442	4822 130 63844	DIGITAL TRANSISTOR	HN1C03F(B)
Q501	4822 209 90596	IC, DRP	SAA3323H
Q502	4822 209 33564	IC, BGU-B12 S-RAM	UPD43256
Q551	4822 209 33399	IC,	SAA2003 SFC3
Q601	4822 209 33401	IC, ADAS	SAA2013
Q701	4822 209 32622	IC, DOLBY	BA1106FS
Q702	4822 130 63848	DIGITAL TRANSISTOR	RN4603
Q801	4822 209 33561	IC, DC-DC CONVERTER	MB3775
Q802	4822 209 31901	IC, LOGIC	TC4S11F
Q803	4822 209 60334	IC, LOGIC	TC4S81F
Q804	4822 130 63847	DIGITAL TRANSISTOR	HN1B01F
Q805	4822 130 63847	DIGITAL TRANSISTOR	HN1B01F
Q806	4822 130 63612	FET	2SK1078
Q807	4822 209 33554	IC, V-REGULATOR 5.0V	RN5RG50A
Q808	4822 130 63609	TRANSISTOR	2SA1588 (Y)
Q809	4822 130 63841	DIGITAL TRANSISTOR	RN1303
Q816	4822 130 63611	FET	2SJ238

MISCELLANEOUS (ALL MSD)

FH51 ~ FH54	4822 156 21729	FERRITE BEAD BK2125HM102
F301 ~ F303	4822 156 21729	FERRITE BEAD BK2125HM102
F441	4822 156 21729	FERRITE BEAD BK2125HM102
F442	4822 156 21729	FERRITE BEAD BK2125HM102
F443	4822 157 71226	ZCYS51R5-M3PT COMMON MODE 3P
F806	4822 252 51166	FUSE 125V 800MA
JA51	4822 265 41534	JACK, COMPUTER I/O 10P
JH01	4822 267 31787	JACK, HEAD PHONES OUT
JU01	4822 265 61292	JACK, 36P
JU02	4822 265 41408	JACK, 17PIN

CAUTION:
FOR CONTINUED PROTECTION AGAINST RISK OF FIRE, REPLACE ONLY WITH SAME 800mA,125V FUSE. REFER REPLACEMENT TO QUALIFIED SERVICE PERSONNEL.

MISCELLANEOUS (ALL MSD)

J301	4822 265 20671	JACK, (LINE MIC DIG. IN)
J401	4822 265 20669	JACK, (OPT/OUTPUT)
J801	4822 267 31789	JACK, DC IN
J802	4822 265 31064	JACK
LA26	4822 157 63437	ELJ-FA100J
L406	4822 157 63437	ELJ-FA100J
L501	4822 157 63437	ELJ-FA100J
L551	4822 157 63437	ELJ-FA100J
L801	4822 157 71227	CD54-100K
L806	4822 157 71228	CDR74-470K
L816	4822 157 71228	CDR74-470K
L817	4822 157 71227	CD54-100K
SH01	4822 277 21749	SLIDE SWITCH
SU21	4822 277 21748	SLIDE SWITCH (REV MODE)
SU22	4822 277 21748	SLIDE SWITCH (HOLD)
S301	4822 277 21749	SLIDE SWITCH (INPUT SEL.)
S302	4822 277 21748	SLIDE SWITCH (ALC)
S701	4822 277 21748	SLIDE SWITCH (DOLBY)
XU01	4822 242 81792	SERAMIC VIB. KBR3.0MWS
X551	4822 242 81793	OTHER VIBRATORS CS-20 (22.5792MHZ)
X552	4822 242 81794	OTHER VIBRATORS CS20 (24.5760MHZ)

PD03 PCB SWITCH BOARD

SEMICONDUCTOR (ALL CHIP)

DD01	4822 209 12296	L.E.D. BR1101W(REC.IND)

MISCELLANEOUS

SD01 ~ SD09	4822 276 13525	PUSH SWITCH
SD10	4822 277 21752	SLIDE SWITCH
SD11	4822 276 13526	PUSH SWITCH

Portable digital compact cassette recorder DCC170

/00/01/05/10/ BK01

Service
Service
Service

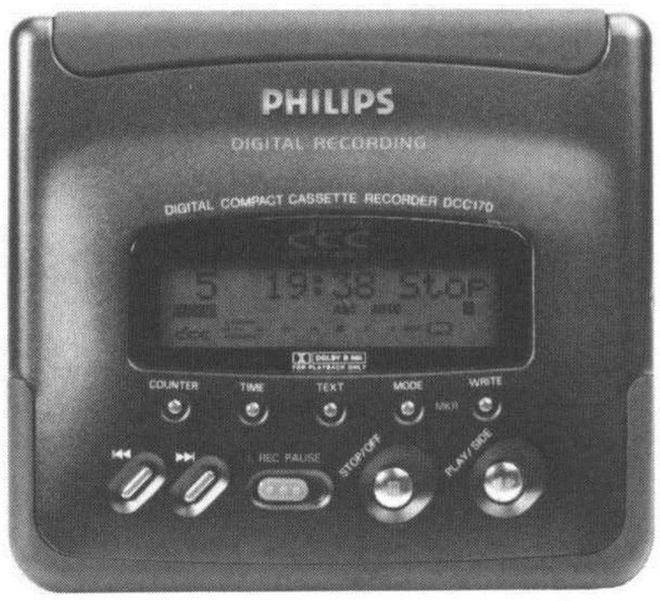

Service Manual

DIGITAL dcc COMPACT CASSETTE

CONTENTS

SECTION	PAGE
SAFETY PRECAUTION	
SPECIFICATIONS	1
PRECAUTIONS FOR MECHANISM AND HEAD ASSEMBLY HANDLING	2
DISASSEMBLY INSTRUCTIONS	3
NOTE FOR ASSEMBLY	9
SERVICE TOOLS	11
MECHANISM ADJUSTMENTS	12
ELECTRICAL ADJUSTMENTS	16
FACTORY/SERVICE MODES	19
TROUBLESHOOTING	23
BLOCK DIAGRAM	29
PRINTED CIRCUIT BOARDS DIAGRAM	31
SCHEMATIC DIAGRAM	35
IC BLOCK DIAGRAM AND TERMINAL FUNCTION OF IC'S	56
SET EXPLODED VIEW AND PARTS LIST	66
MECHANISM EXPLODED VIEW AND PARTS LIST	69
ELECTRICAL PARTS LIST	70

Published by Consumer Electronics Printed in the Netherlands ©Copyright reserved Subject to modification

4822 725 24749

PHILIPS

PHILIPS

PCS 79 261

◘ SAFETY PRECAUTIONS (This "safety precaution" is applied only in U.S.A.)

1. Before servicing, unplug the power cord to prevent an electric shock.
2. When replacing parts, use only manufacturer's recommended components for safety.
3. Check the condition of the power cord. Replace if wear or damage is evident.
4. After servicing, be sure to restore the lead dress, insulation barriers, insulation papers, shields, etc.
5. Before returning the serviced equipment to the customer, be sure to make the following insulation resistance test to prevent the customer from being exposed to a shock hazard.

● INSULATION RESISTANCE TEST

1. Unplug the power cord and short the two prongs of the plug with a jumper wire.
2. Turn on the power switch.
3. Measure the resistance value with ohmmeter between the jumpered AC plug and each exposed metal cabinet part, such as screwheads antenna, control shafts, handle brackets, etc. Equipment with antenna terminals should read between 3MΩ and 5.2MΩ to all exposed parts. (Fig. A) Equipment without antenna terminals should read approximately infinity to all exposed parts. (Fig. B)

Note: Some exposed parts may be isolated from the chassis by design. These will read infinity.

(Fig A)
Resistance = 3MΩ—5.2MΩ

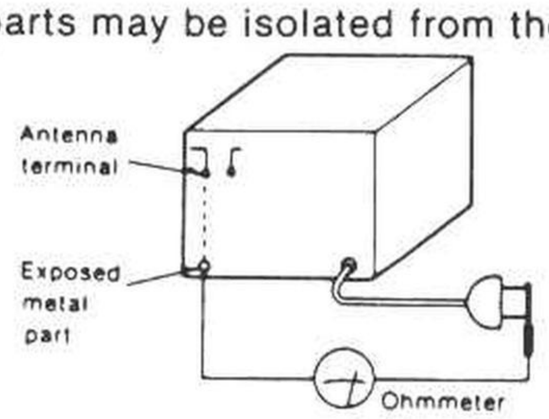

(Fig B)
Resistance = Approx ∞

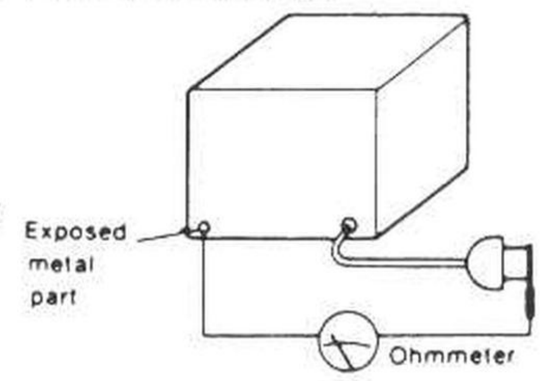

4. If the measurement is outside the specified limits, there is a possibilty of a shock hazard. The equipment should be repaired and rechecked before it is returned to the customer.

CAUTION :
FOR CONTINUED PROTECTION AGAINST RISK OF FIRE,
REPLACE ONLY WITH SAME TYPE 800mA,125V FUSE.
REFER REPLACEMENT TO QUALIFIED SERVICE PERSONNEL.

ESD

(GB) **WARNING**

All ICs and many other semi-conductors are susceptible to electrostatic discharges (ESD). Careless handling during repair can reduce life drastically.
When repairing, make sure that you are connected with the same potential as the mass of the set via a wrist wrap with resistance. Keep components and tools also at this potential.

(F) **ATTENTION**

Tous les IC et beaucoup d'autres semi-conducteurs sont sensibles aux decharges statiques (ESD).
Leur longevite pourrait être considérablement ecourtee par le fait qu'aucune precaution n'est prise a leur manipulation.
Lors de reparations, s'assurer de bien être relie au même potentiel que la masse de l'appareil et enfiler le bracelet serti d'une resistance de securite.
Veiller a ce que les composants ainsi que les outils que l'on utilise soient également a ce potentiel.

(D) **WARNUNG**

Alle ICs und viele andere Halbleiter sind empfindlich gegen elektrostatische Entladungen (ESD).
Unsorgfaltige Behandlung bei der Reparatur kann die Lebensdauer drastisch vermindern.
Sorgen sie dafür, dass Sie im Reparaturfall uber ein Pulsarmband mit Widerstand mit dem Massepotential des Gerates verbunden sind, halten Sie Bauteile und Hilfsmittel ebenfalls auf diesem Potential.

(NL) **WAARSCHUWING**

Alle IC's en vele andere halfgeleiders zijn gevoelig voor electrostatische ontladingen (ESD).
Onzorgvuldig behandelen tijdens reparatie kan de levensduur drastisch doen verminderen.
Zorg ervoor dat u tijdens reparatie via een polsband met weerstand verbonden bent met hetzelfde potentiaal als de massa van het apparaat.
Houd componenten en hulpmiddelen ook op ditzelfde potentiaal.

(I) **AVVERTIMENTO**

Tutti IC e parecchi semi-conduttori sono sensibili alle scariche statiche (ESD).
La loro longevita potrebbe essere fortemente ridatta in caso di non osservazione della più grande cauzione alla loro manipolazione.
Durante le riparazioni occorre quindi essere collegato allo stesso potenziale che quello della massa dell'apparecchio tramite un braccialetto a resistenza.
Assicurarsi che i componenti e anche gli utensili con quali si lavora siano anche a questo potenziale.

SPECIFICATIONS

DIGITAL SIGNAL FORMAT:

Tape recording system	Digital compact cassette
Sampling frequencies:	48 kHz, 44.1 kHz, 32 kHz (selected automatically)
No. of quantizing bits:	16-bits, linear
Coding format	PASC
No. of channels:	2-channel, stereo

AUDIO PERFORMANCE:

DCC

Frequency response:	
fs:44.1 kHz	20 Hz – 20 kHz + 0.5 dB, –1.5 dB
fs:48 kHz	20 Hz – 22 kHz + 0.5 dB, –1.5 dB
fs:32 kHz	20 Hz – 14.5 kHz + 0.5 dB, –1.5 dB
S/N ratio	90 dB or more
Dynamic range:	90 dB or more
Wow and flutter	Quartz crystal precision

Compact cassette

Track format:	4 track 2-channel stereo
Frequency range:	20 Hz –18 kHz
S/N ratio (CrO_2):	50 dB or more

TERMINALS

Line output (fixed):	3.5 mm jack
output level:	1.0 V (50 kΩ)
Phones output:	3.5 mm jack
max. output power:	18 mW +18mW (16 Ω)
DC input:	6.0 V

POWER REQUIREMENTS

Battery		Ni-Cd rechargeable battery
Recording time		Approx. 2.5 hours
Playback time		Approx. 2.5 hours
Recharging time		Approx. 3 hours
External:	mains adapter	
USA/Canada	SBC6619/47	120 V, 60 Hz
Europe	SBC6619/30	220 – 230 V, 50 Hz
U. K.	SBC6619/35	240 V, 50 Hz
Australia/New Zealand	SBC6619/40	230 – 240 V, 50 Hz
Other countries	SBC6619/31	120/230 V, 50/60 Hz

MISCELLANEOUS

Mechanism	
Head:	36 channel thin-film head
Motor:	Brushless motor
Tape speed	4.76 cm/sec.

GENERAL

Dimensions (W x H x D):	111.6 x 38.1 x 99.8 mm ($4\ ^{3}/_{8}$ x $1\ ^{1}/_{2}$ x $3\ ^{15}/_{16}$ inch)
Weight (incl. rechargeable battery):	420 gr.

ACCESSORIES

In-ear phones	SBC3179
Head band type	SBC3184 (only for BK01)
Remote control	SBC6270
Rechargeable battery:	SBC6434
Coaxial digital cable	SBC1275
Mains adapter:	
Carrying case	
HiFi connection cable	

Note : These specifications are subject to change without notice.

HANDLING CHIP COMPONENTS

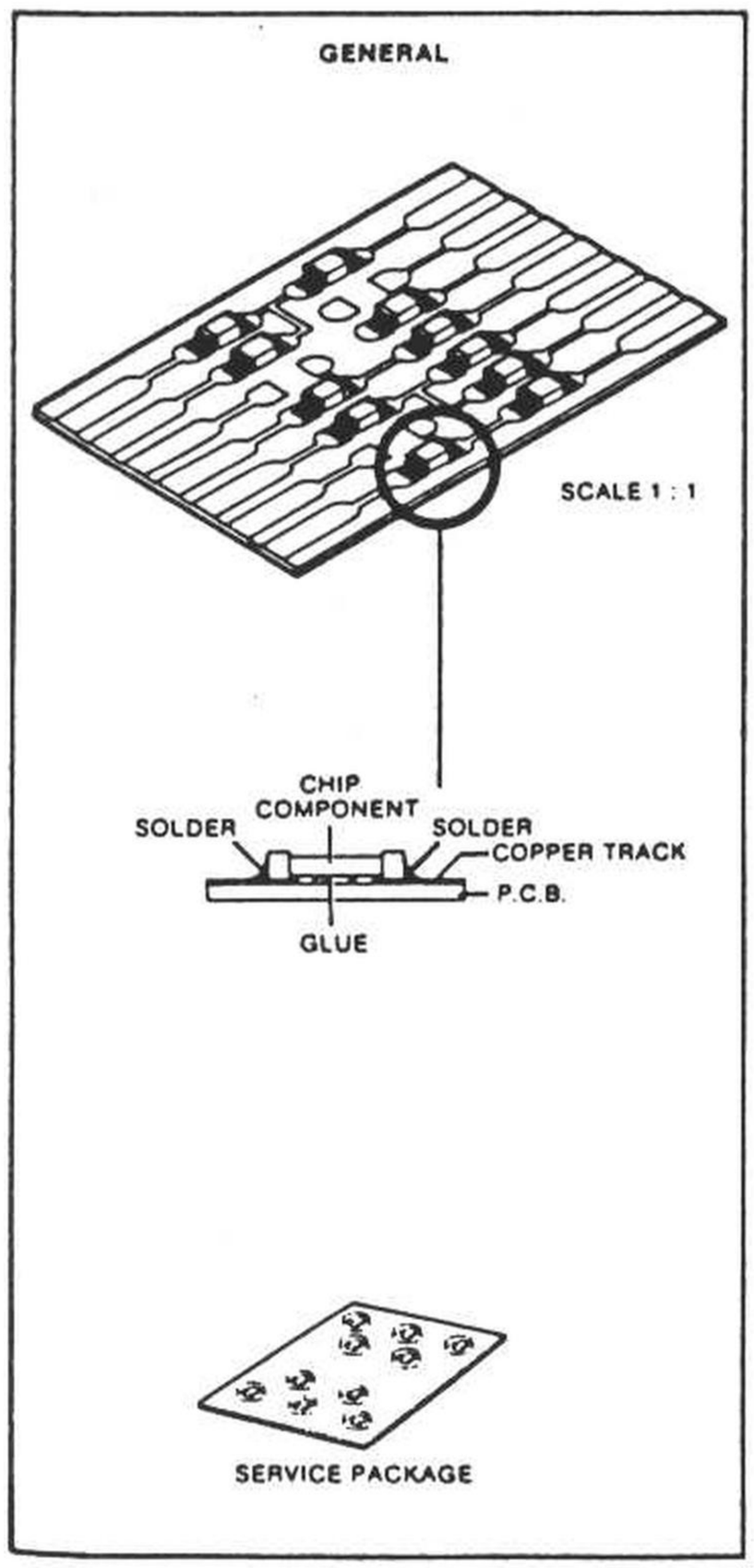

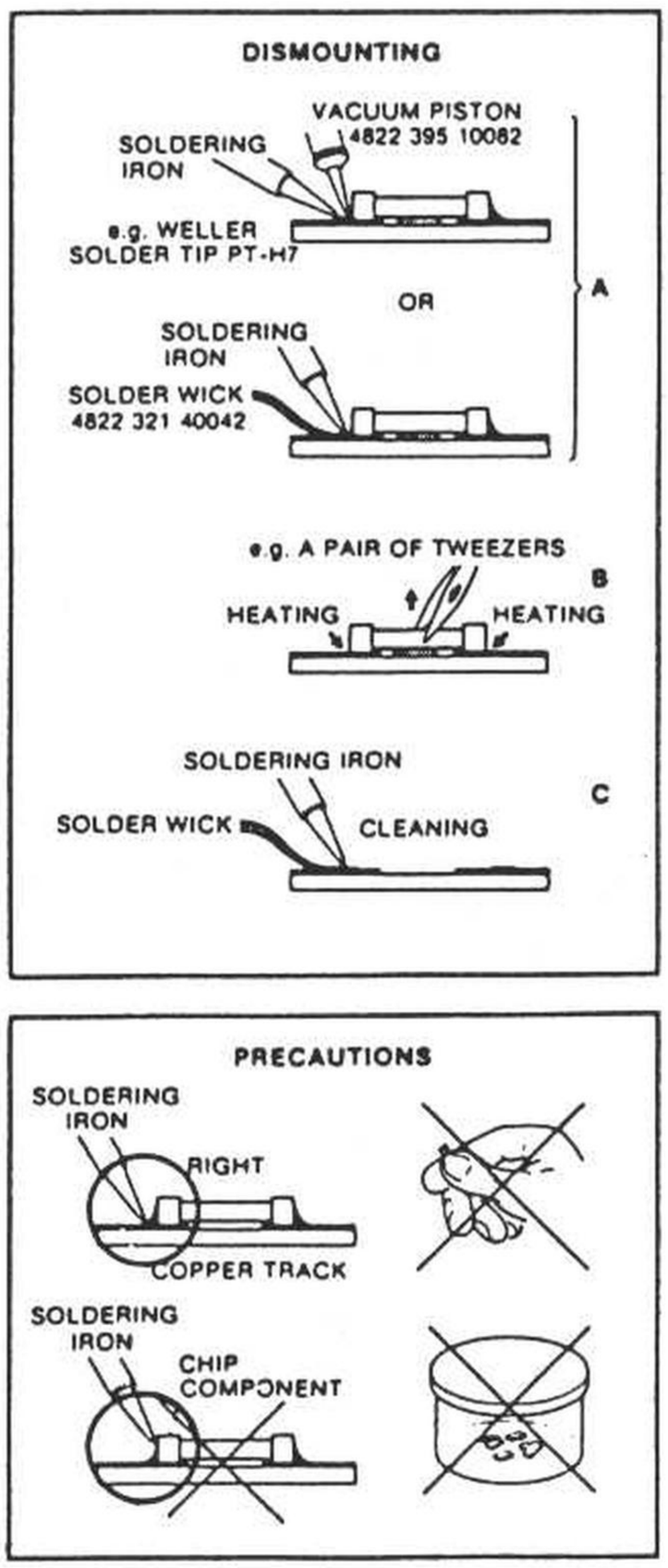

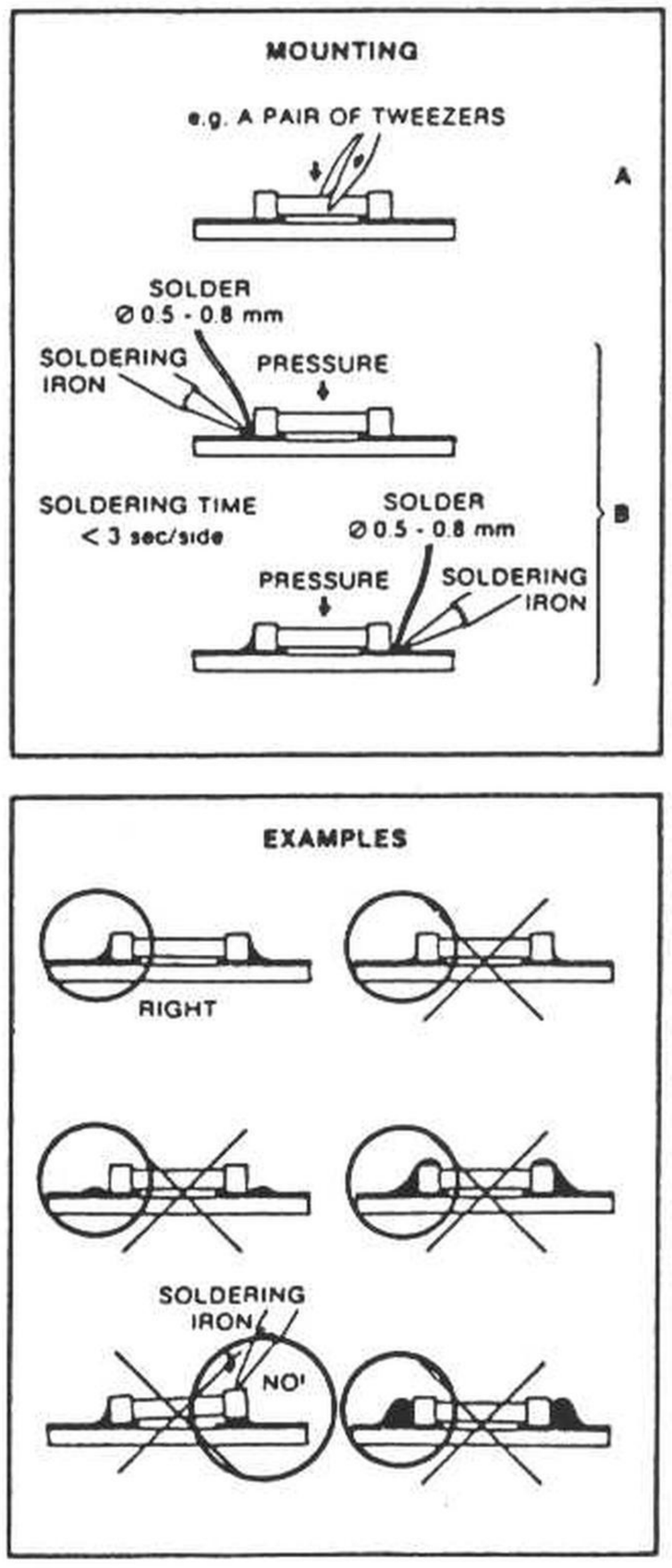

◘ PRECAUTIONS FOR MECHANISM AND HEAD ASSEMBLY HANDLING

(1) Connect your wrist strap to the unit's GND or to the grounding post of a measuring instrument you are using.
To protect the head assembly from magnetic or electrostatic damage, be sure to wear the wrist strap whenever replacing the head assembly or handling the PC boards.

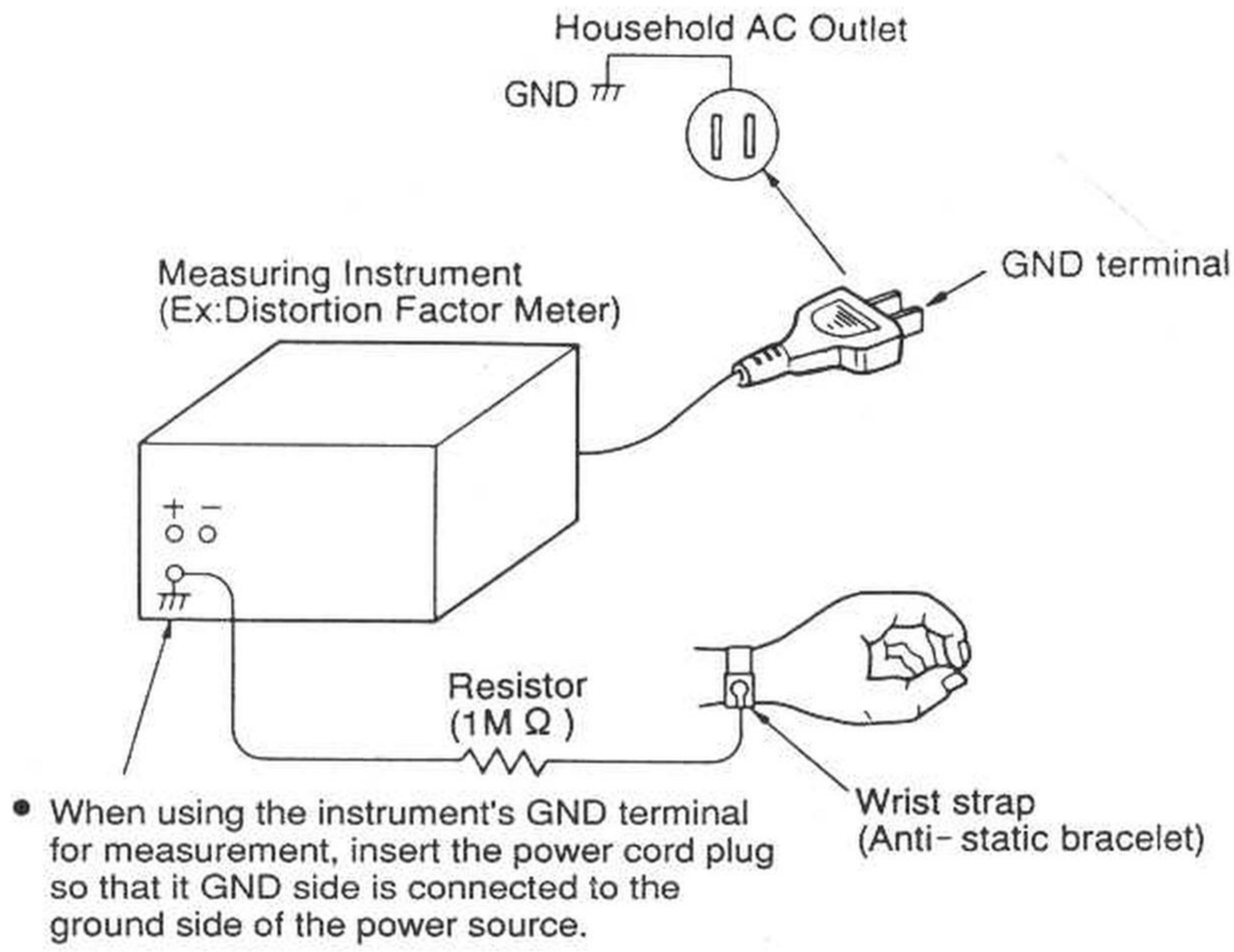

(2) When disconnecting the head FPC from the Mechanism P.C.B., install a shorting clip on the FPC to protect it from magnetic or electrostatic damage.

(3) • Use a ceramic screwdriver for all head replacement and adjustment.
• Keep magnetized metallic screwdrivers away from the head assembly, as they may damage the head's magnetic properties.

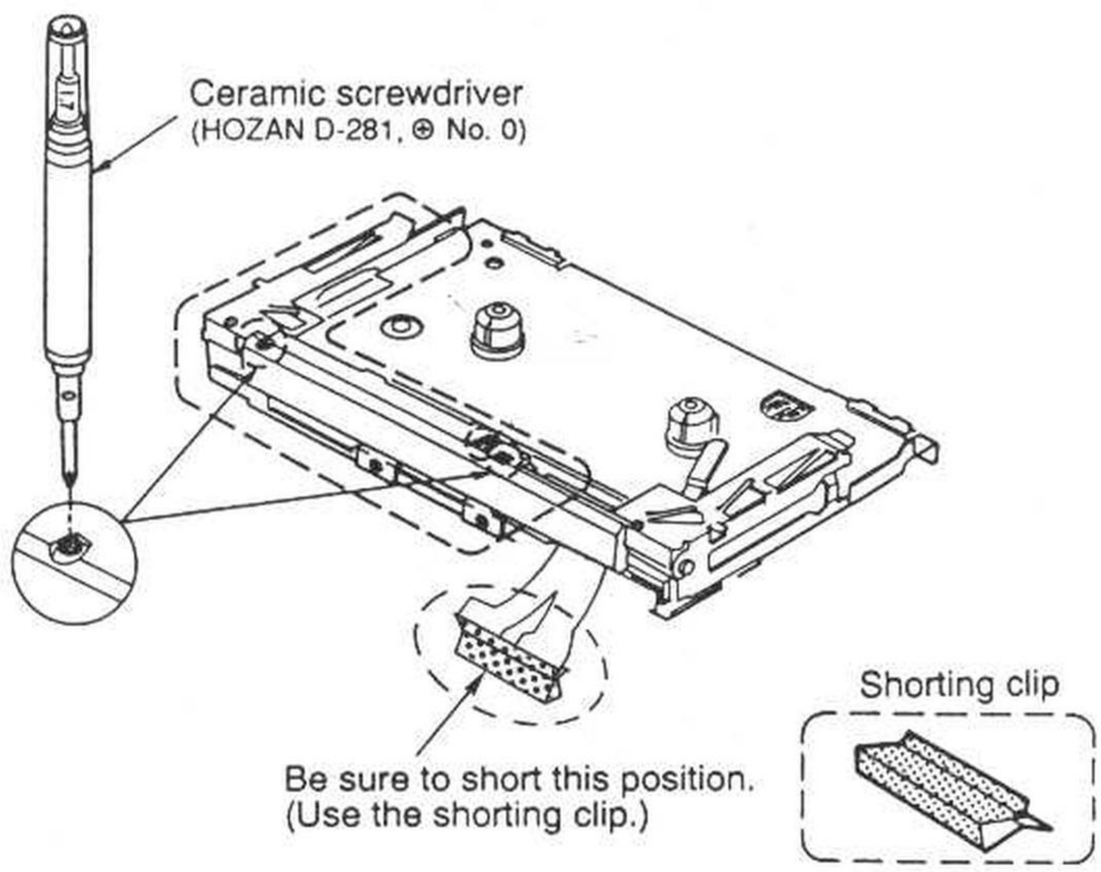

DISASSEMBLY INSTRUCTIONS

Ref. No. 1	Removal of the bottom cabinet ass'y
Procedure 1	

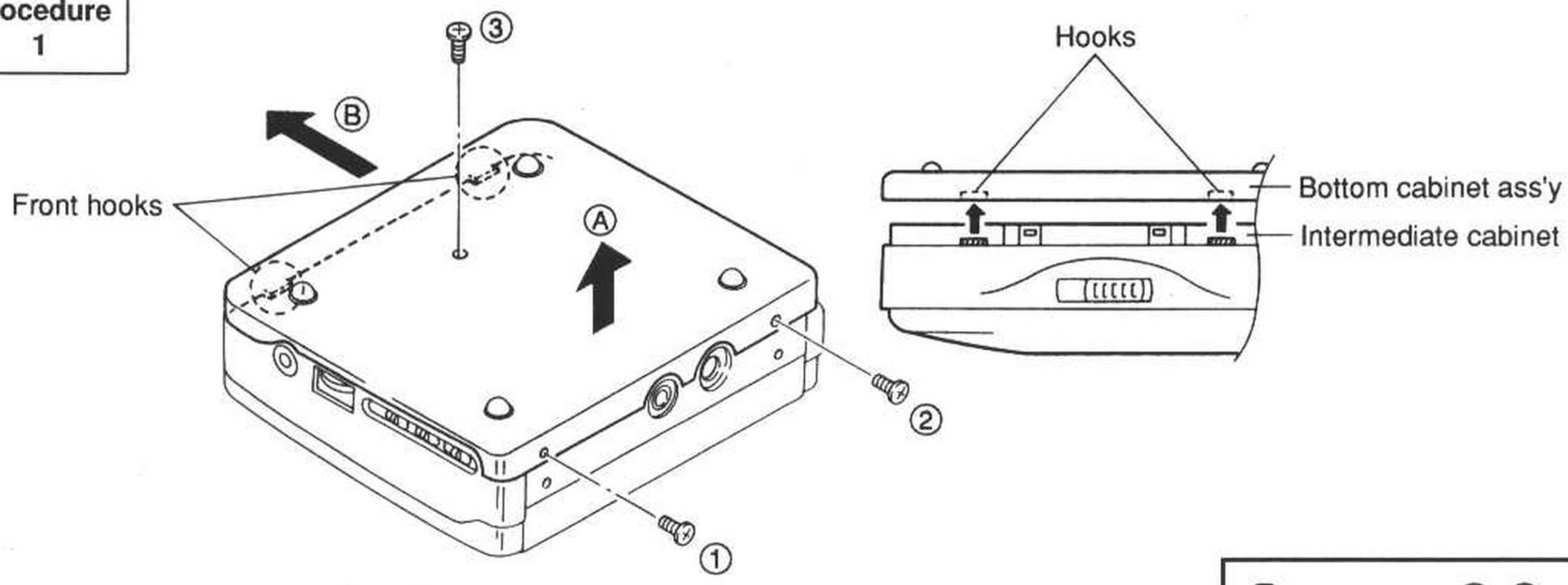

1. Remove the 3 screws (① ~ ③).
2. Lift up the bottom cabinet ass'y in the direction of arrow Ⓐ, and push it in the direction of arrow Ⓑ to release the 2 front hooks.

(3pcs.) ①~③
M1.4 x 2.5

Ref. No. 2	Removal of the MAIN P. C. B.
Procedure 1 → 2	

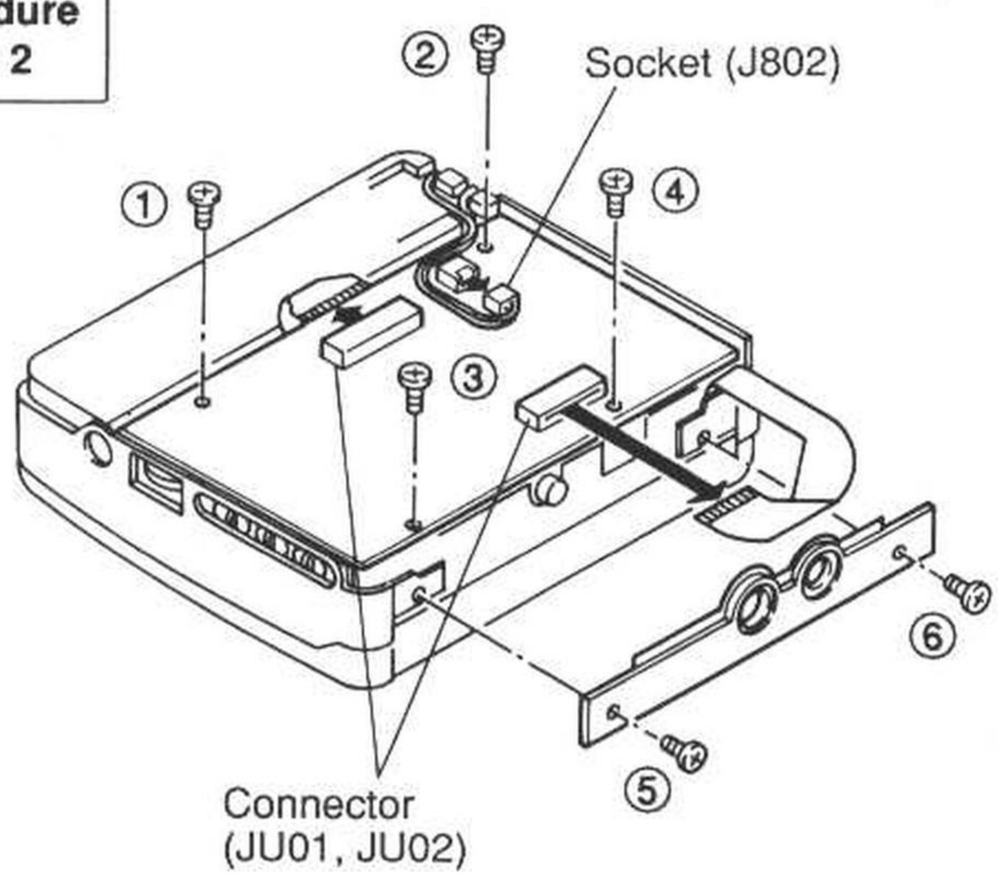

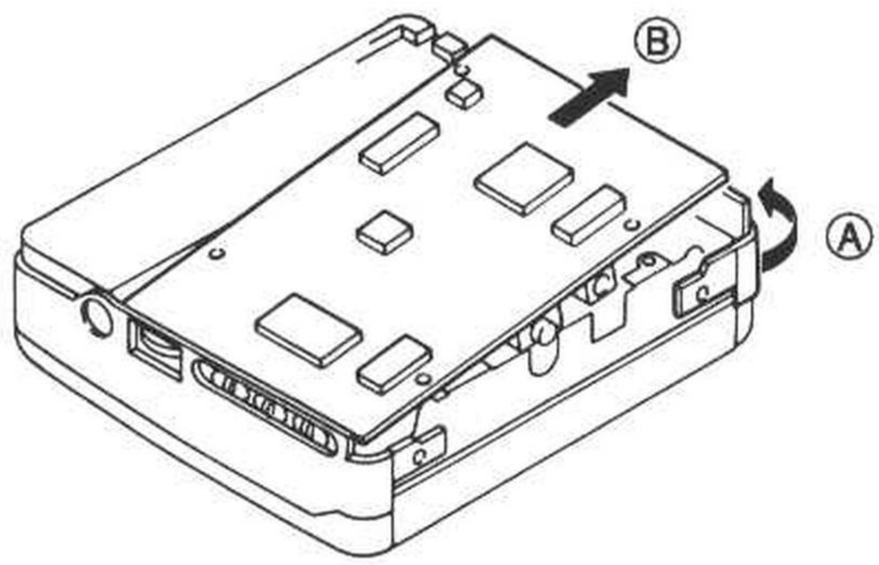

1. Remove the 2 FPC boards (JU01, JU02).
2. Remove a socket of battery terminal wire (J802).
3. Remove the 4 screws (① ~ ④).
4. Remove the 2 screws (⑤, ⑥). And then remove the rear frame panel.
5. Open the intermediate cabinet in the direction of arrow Ⓐ.
   Remove the MAIN P. C. B. shifting in the direction of arrow Ⓑ.

Removal of the FPC board

1. Push the upper portion of connector in the direction of arrow Ⓐ, and then pull the FPC board in the direction of arrow Ⓑ.

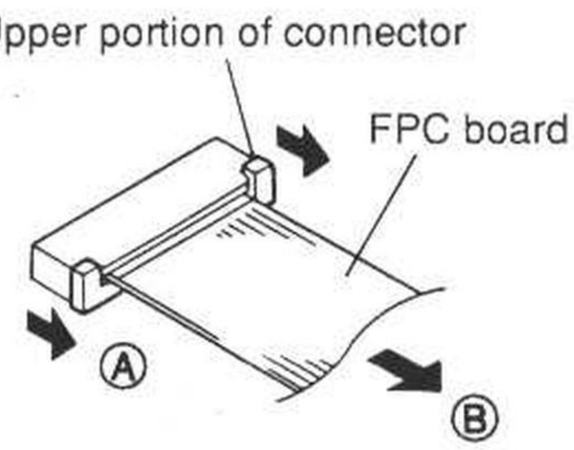

(1pcs.) ①
M1.4 x 3.5

(5pcs.) ②~⑥
M1.4 x 2.5

Ref. No. 3	**Removal of the intermediate cabinet**
Procedure 1 → 2 → 3	

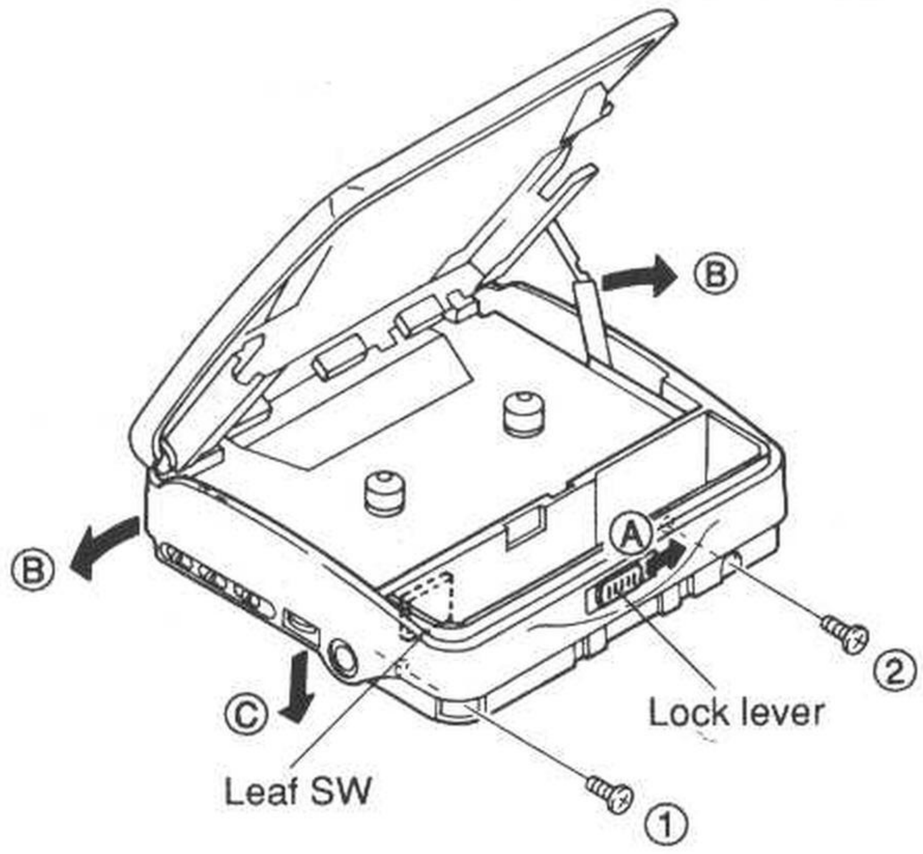

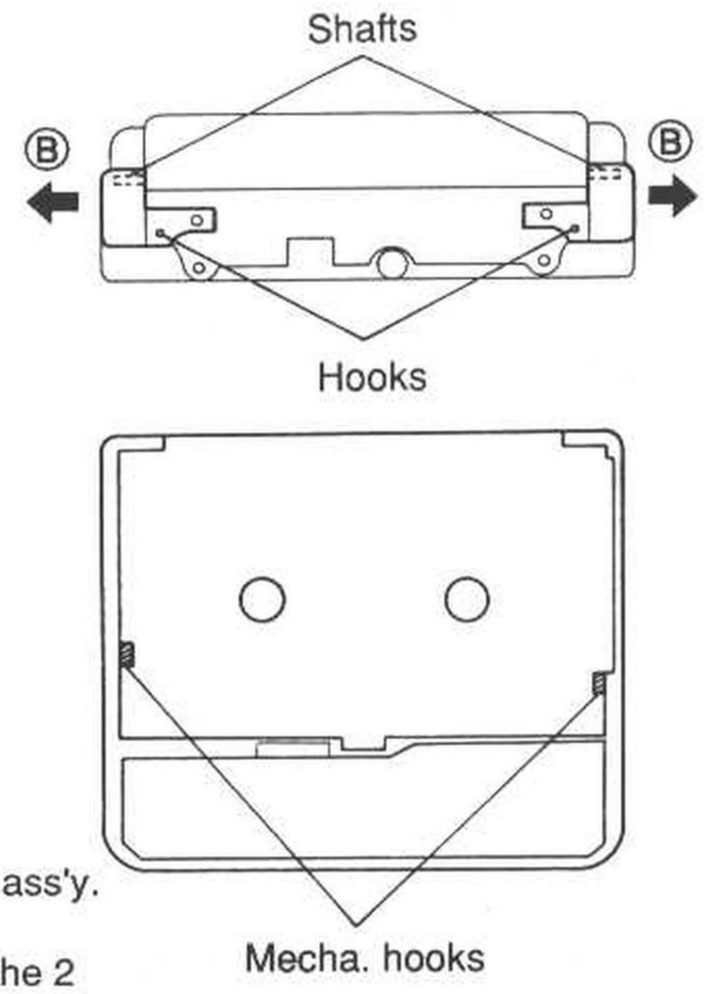

1. Push the open knob in the direction of arrow Ⓐ, and then open the cassette lid ass'y.
2. Remove the 2 screws (①, ②).
3. Stretch the intermediate cabinet in the direction of arrow Ⓑ, and then remove the 2 hooks of the back side bracket ass'y and the 2 shafts.
4. While stretching the intermediate cabinet, release the 2 mecha. hooks, and then remove the intermediate cabinet in the direction of arrow Ⓒ.

Note: Be sure not to hook the leaf SW up the intermediate cabinet.

(2pcs.) ①, ②
M1.4 x 2.5

Ref. No. 4	**Removal of the arm ass'y**
Procedure 1 → 2 → 3 → 4	

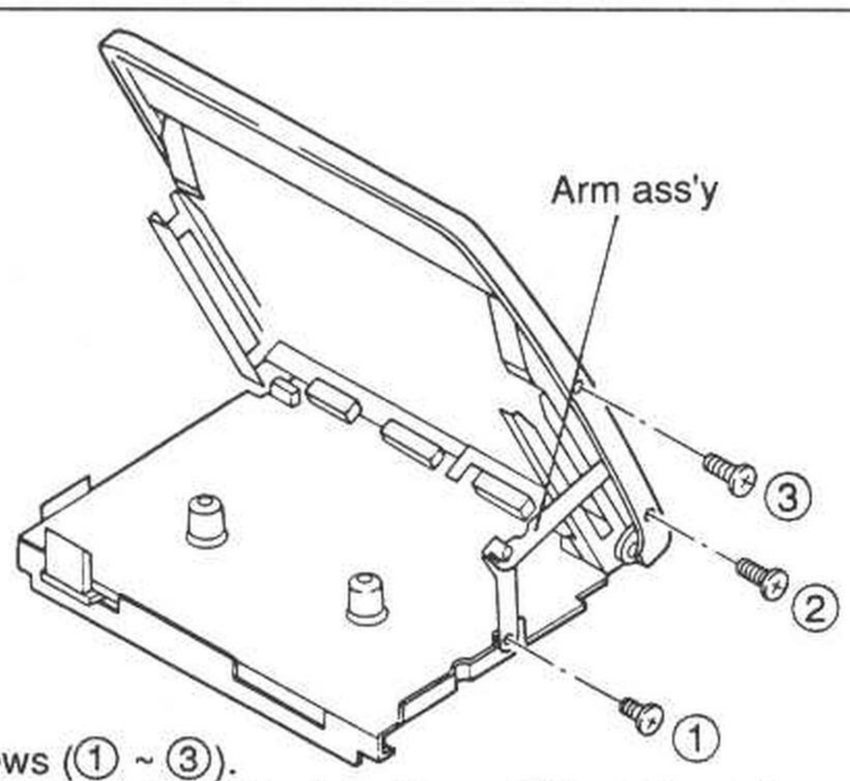

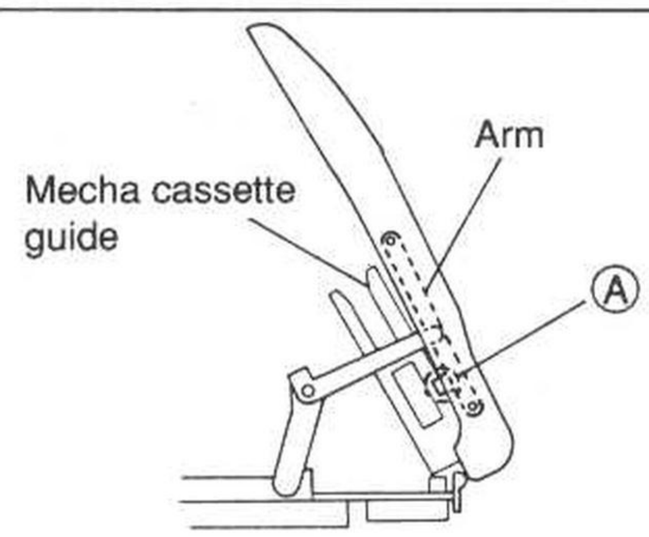

(1pcs.) ①
M1.4 x 1.5

(2pcs.) ②,③
M1.4 x 2

1. Remove the 3 screws (① ~ ③).

Note: Check the projection of head block holder at Ⓐ is in the link angles when assembling.

Ref. No. 5	**Removal of the top case ass'y**
Procedure 1 → 2 → 3 → 4 → 5	

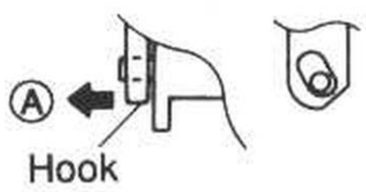

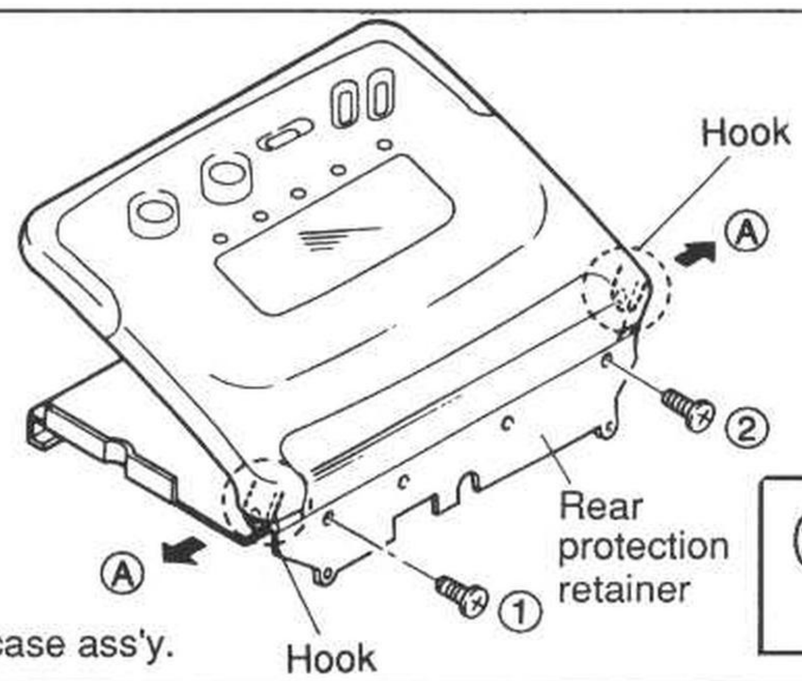

(2pcs.) ①,②
M1.4 x 2
SCREW HEAD Ø 2.0

1. Remove the 2 screws (①, ②).
2. Stretch the hooks (Ⓐ), and then remove the top case ass'y.

Ref. No. 6	Removal of the LCD mold cover ass'y
Procedure 1 → 2 → 3 → 4 → 5 → 6	

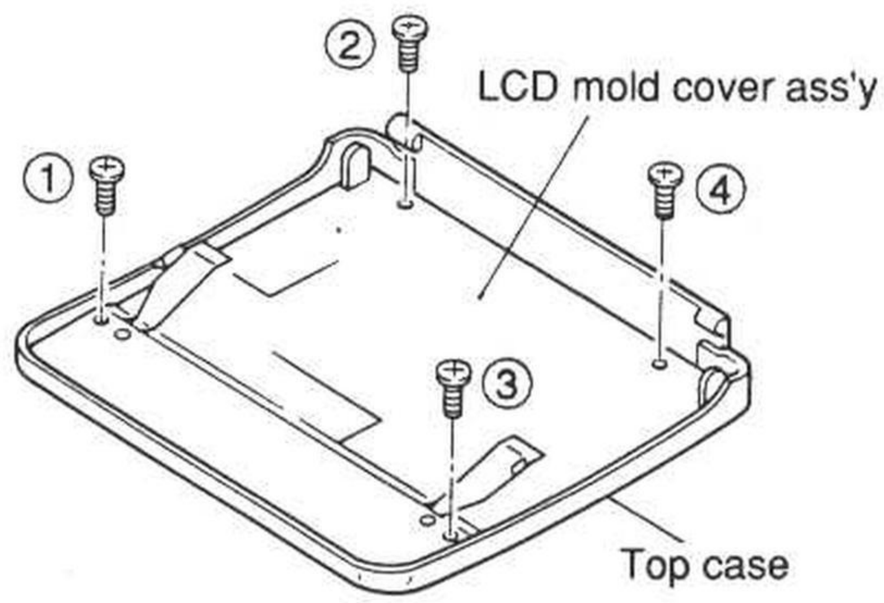

1. Remove the 4 screws (① ~ ④).

(4pcs.) ①~④
M1.4 x 2.5

Ref. No. 7	Removal of the cassette guide spring
Procedure 7	

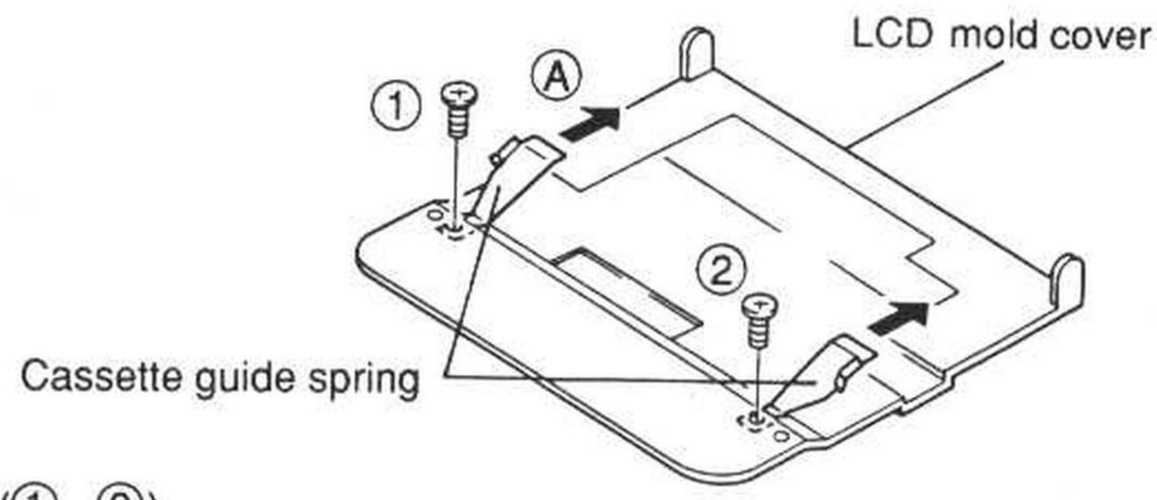

1. Remove the 2 screws (① , ②).
2. Pull out the cassette guide spring in the direction of arrow Ⓐ.

(2pcs.) ①,②
M1.4 x 2.5

Ref. No. 8	Removal of the LCD P. C. B. and the switch P. C. B.
Procedure 1 → 2 → 3 → 4 → 5 → 6 → 8	

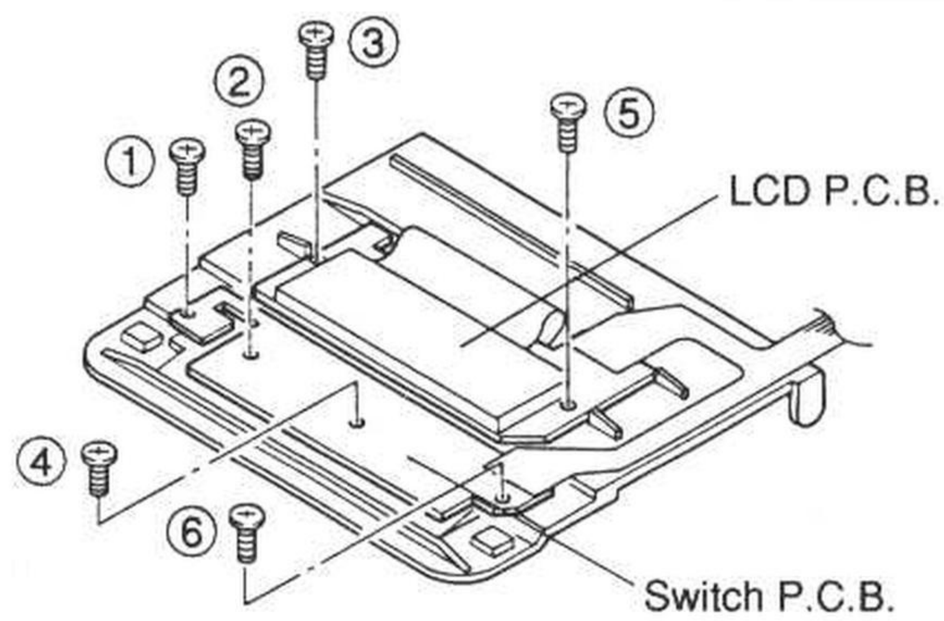

1. Remove the 6 screws (① ~ ⑥).

(6pcs.) ①~⑥
B TITE1.4 x 2.5

Ref. No. 9	Removal of the mechanism chassis
Procedure 1 → 2 → 3 → 4 → 5 → 9	

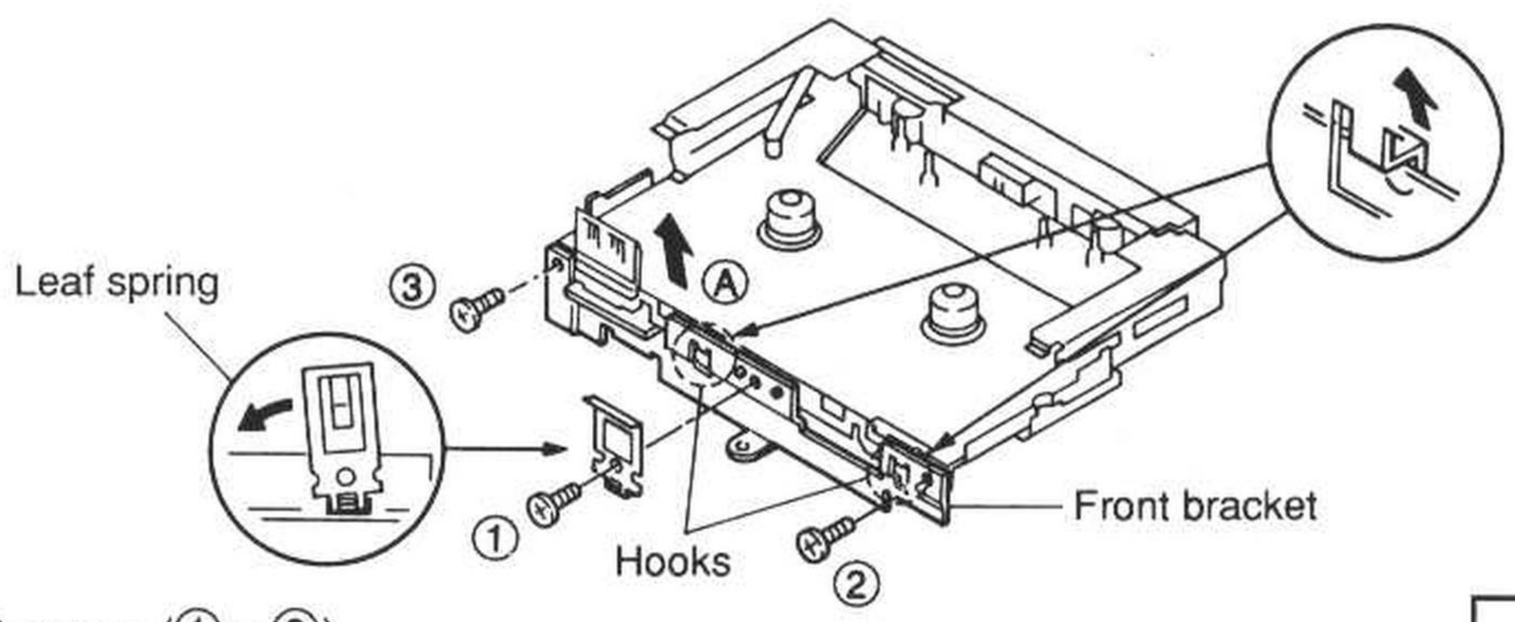

1. Remove the 3 screws (① ~ ③).
2. Pull out the leaf spring by slanting it as shown.
3. Lift up the front bracket, and then release the hooks. Remove it in the direction of arrow Ⓐ.

(3pcs.) ①~③
M1.4 x 2.5

Ref. No. 10	Removal of the mechanism P. C. B. and TAPE IN/ SELECT det. switch
Procedure 1 → 2 → 3 → 9 → 10	

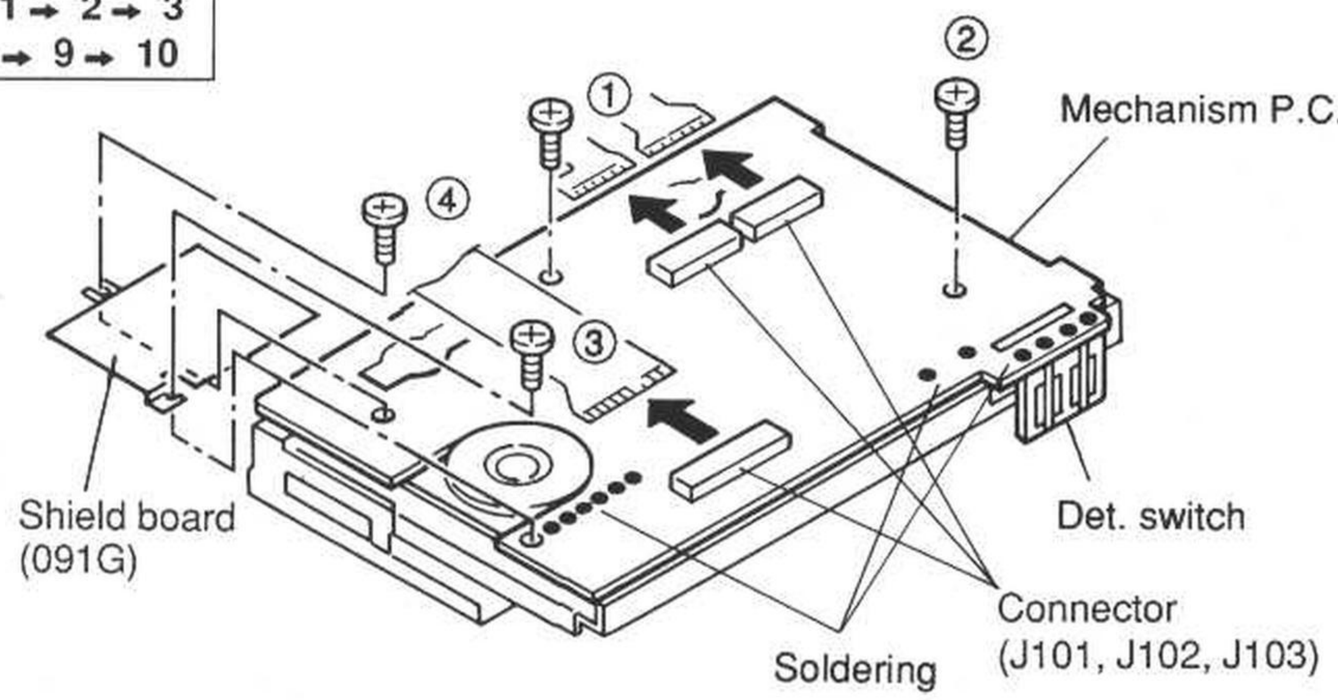

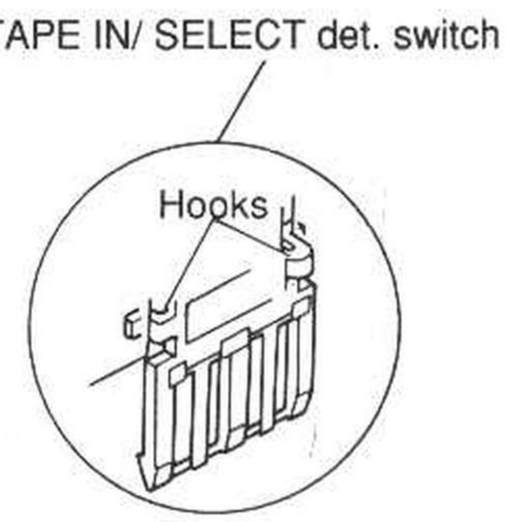

1. Remove the FPC boards (J101, J102, J103).
2. Remove the shield board (091G).
3 Remove the 12 soldering part (2 solenoids, 6 motors, 4 switches).
4. Remove the 4 screws (① ~ ④).
5. Remove the mechanism P. C. B.
   (Be sure not to damage at the connection of the TAPE IN/ SELECT det. switch).
6. Release the 2 hooks of TAPE IN/ SELECT det. switch.

Note: Be sure to use a clip to the terminal of the FPC board which is from the head during repair in order to avoid the static electricity.

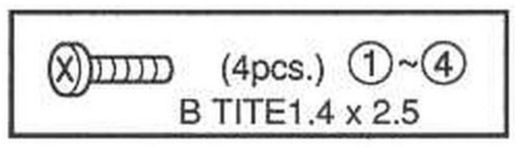

Ref. No. 11	Removal of the lock lever ass'y
Procedure 1 → 11	

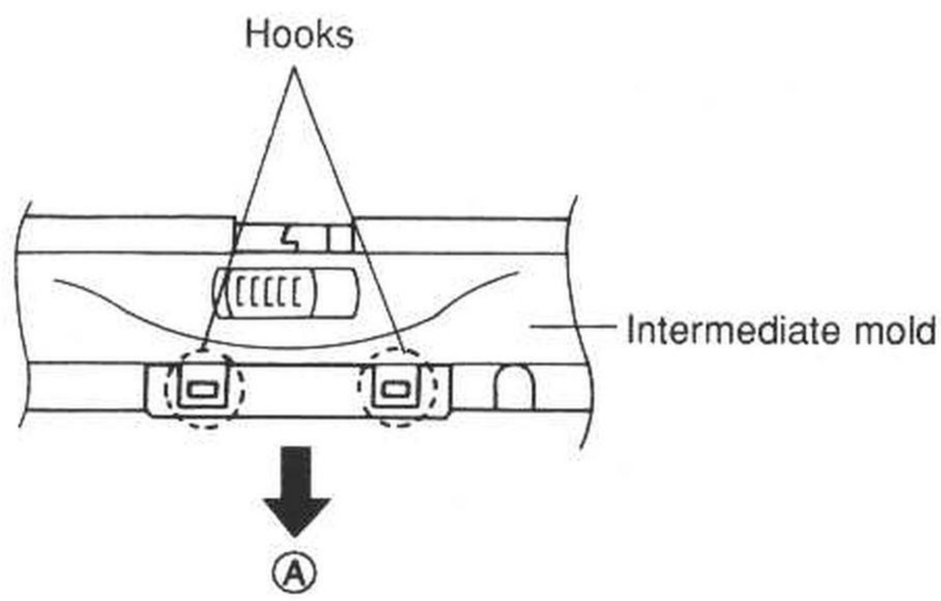

1. Lift up the hooks of the intermediate mold in the direction of arrow Ⓐ and pull it out with the pliers.

Ref. No. 12	Removal of the battery contactor
Procedure 1 → 12	

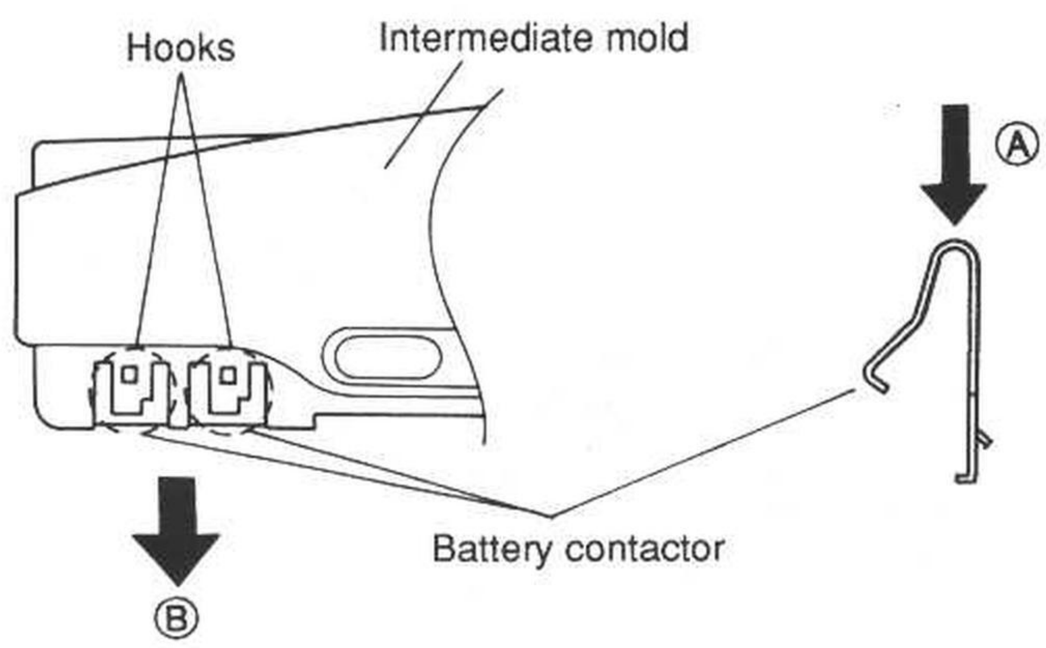

1. Lift up the hooks of the intermediate cabinet.
2. Push from the inside of the intermediate cabinet in the direction of arrow Ⓐ and remove it in the direction of arrow Ⓑ.

• How to replace the mechanism block

The mechanism block is supplied without other parts as a semi-assembly. The head block ass'y, motor and belt are supplied separately from the mechanism block.
If the mechanism block is exchanged as a replacement assembly, follow the preparation procedure below.

Preparation procedure
Remove the head block ass'y, motor and belt from the mechanism to be replaced and replace those parts to the new mechanism block. (Refer to Fig. 1 and 2.)
(Follow the procedures in Ref. No. 9, 10 in the Disassembly instructions. Refer to pages 5 and 6.)

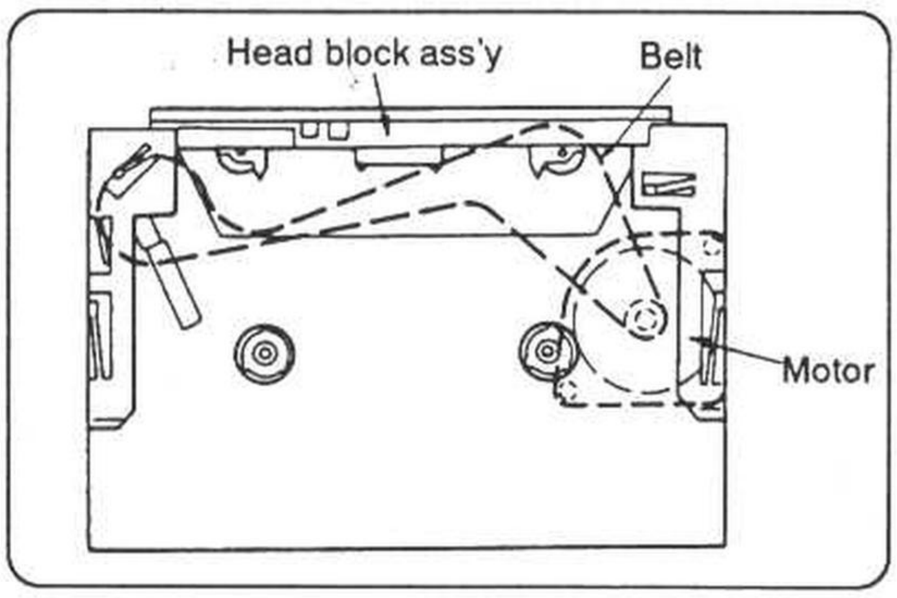

Mechanism to be repaired
Fig. 1

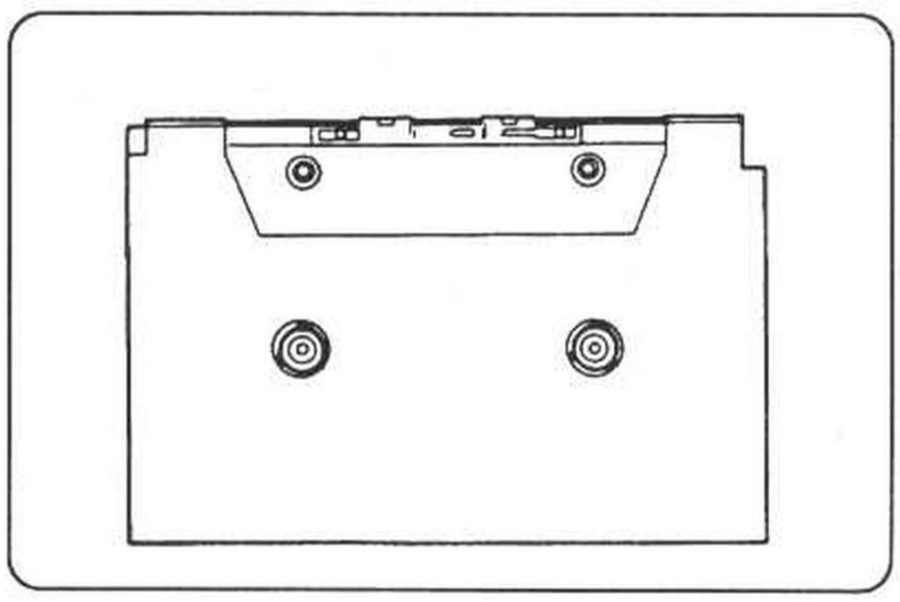

Mechanism block
Fig. 2

• How to replace the head block ass'y

The head block is supplied as a head block ass'y. (Refer to Fig 3.)
The head and pinch roller arm(L)•(R) are supplied together in the head block ass'y.
The pinch roller arm(L)•(R) is also supplied separetely.

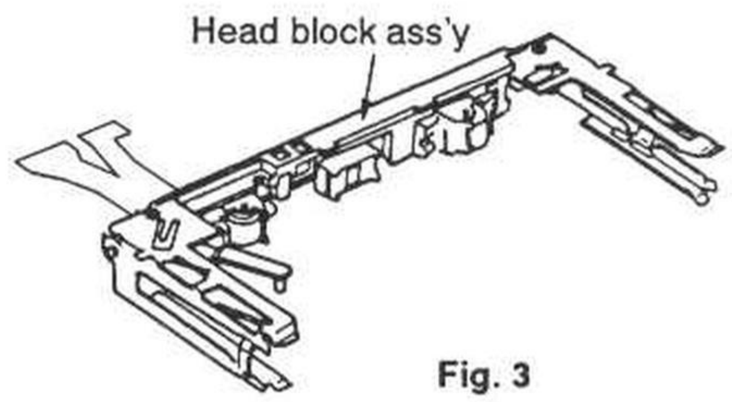

Fig. 3

• How to replace cam gear and solenoid

The cam gear and solenoid are included in the mechanism block. They are also supplied separately.

• How to remove the head block ass'y and pinch roller arm(L)•(R)

1. Follow the procedures in Ref. No. 1 ~ 5 in the Disassembly instructions. (Refer to pages 3 and 4.)

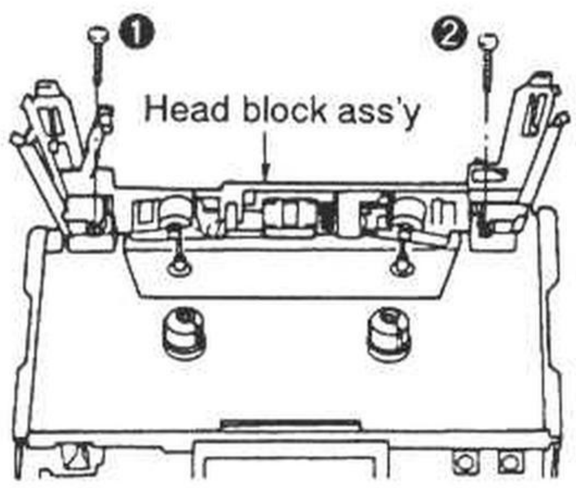

2. Remove the 2 screws(❶, ❷) to remove the head block ass'y.

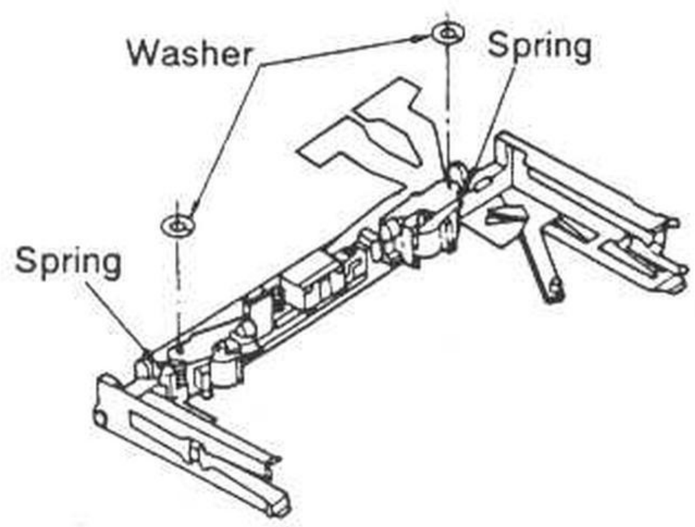

3. Remove the 2 washers.
4. Remove the springs from the hook.

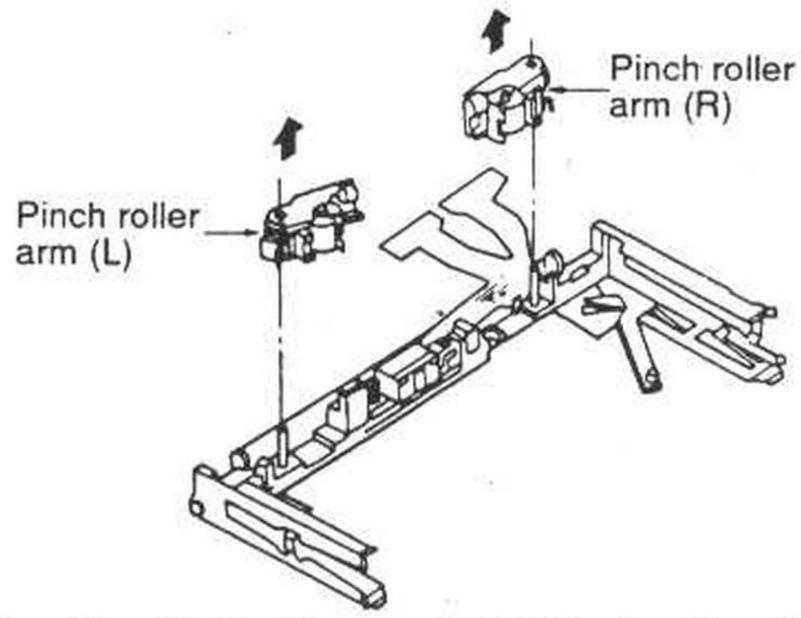

5. Lift up the pinch roller arm(L)•(R) in the direction of arrow.

• Removal of the motor and belt

1. Follow the procedures in Ref. No. 1 ~ 10 in the Disassembly instructions. (Refer to pages 3 ~ 6.)
2. Remove the 2 screws(❶ , ❷).(Refer to Fig. 1.)
3. Remove the 2 screws(❸ , ❹) and the fixing plate.(Refer to Fig. 2.)
4. Remove the motor in the direction of arrow.(Refer to Fig. 2.)
5. Remove the belt from the motor.(Refer to Fig. 3.)

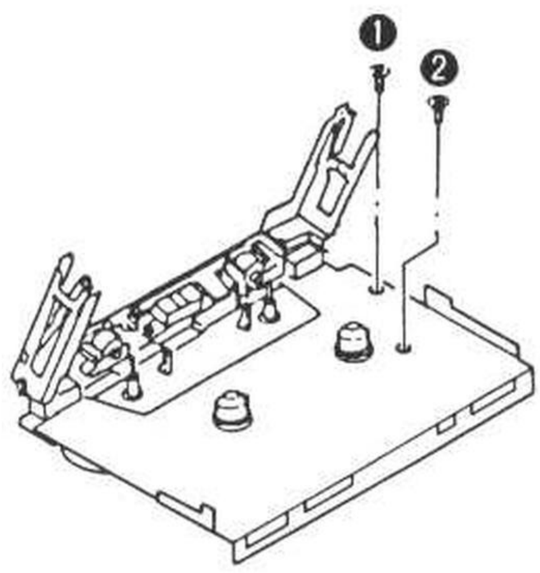

Fig. 1

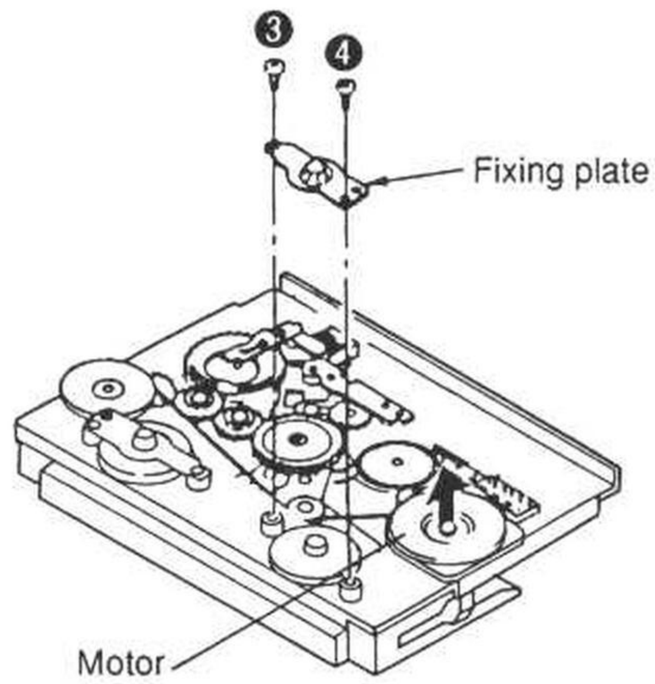

Fig. 2

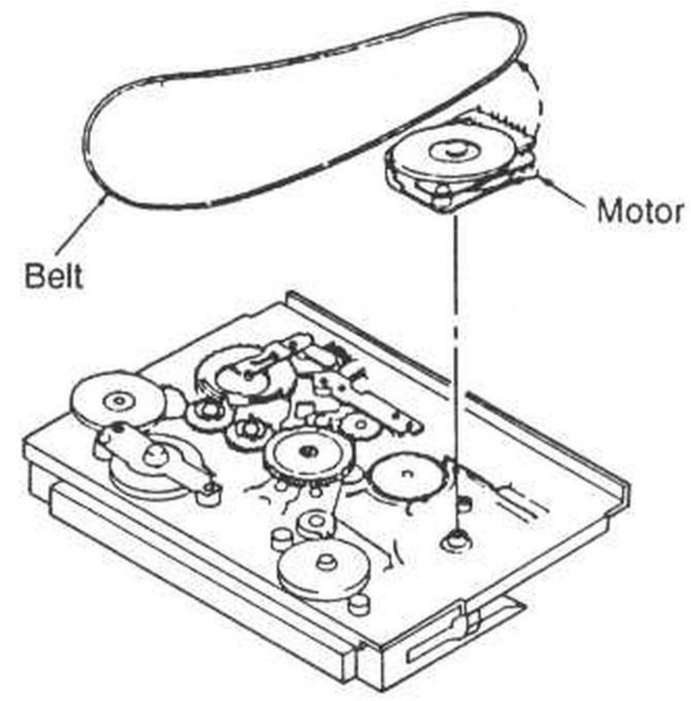

Fig. 3

• Befor installing the belt to the motor, insert the unmagnetized sheet to the clearance between chassis and lower portion of motor, and then push the upper portion of motor in the direction of arrow.
Put the belt into the clearance between upper portion of motor and coil P.C.B.
(Refer to Fig. 4 and 5.)

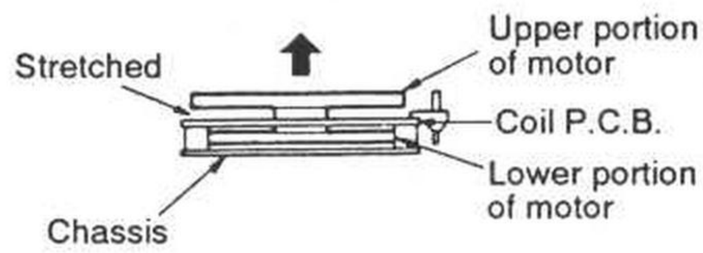

Fig. 4

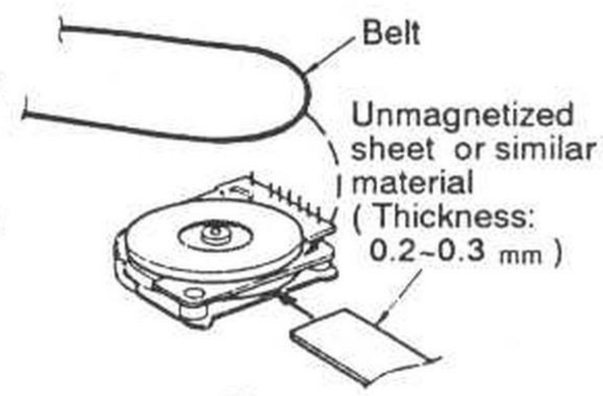

Fig. 5

• Removal of the cam gear and solenoid

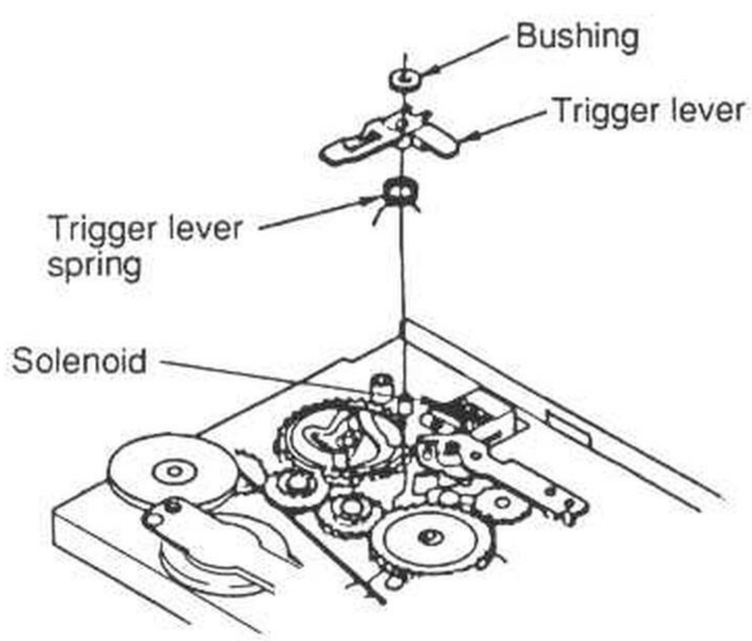

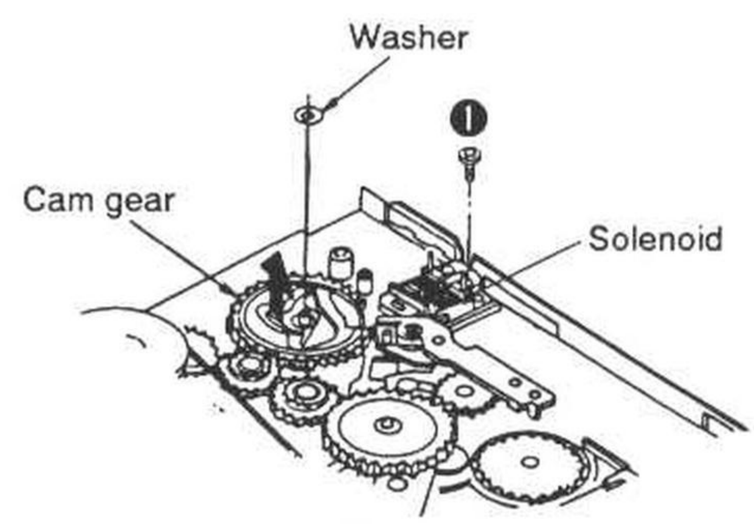

1. Follow the procedures in Ref. No. 1 ~ 10 in the Disassembly instructions. (Refer to pages 3 ~ 6.)
2. Pull out the bushing.
3. Remove the trigger lever.

Note: Avoid missing the trigger lever spring when removing the trigger lever.

4. Remove the 1 screw(❶) and the solenoid.
5. Remove the washer.
6. Remove the cam gear in the direction of arrow.

NOTE FOR ASSEMBLY

● Notice for assembling the Mechanism P.C.B.

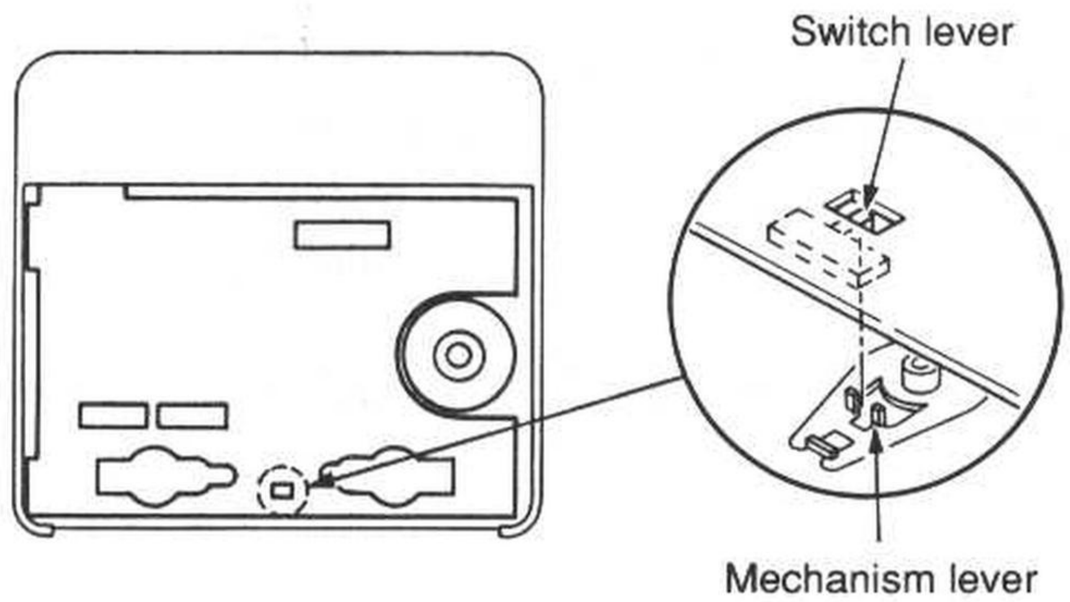

- Align the switch lever with mechanism lever when installing the Mechanism P.C.B.

● Notice for assembling the intermediate cabinet

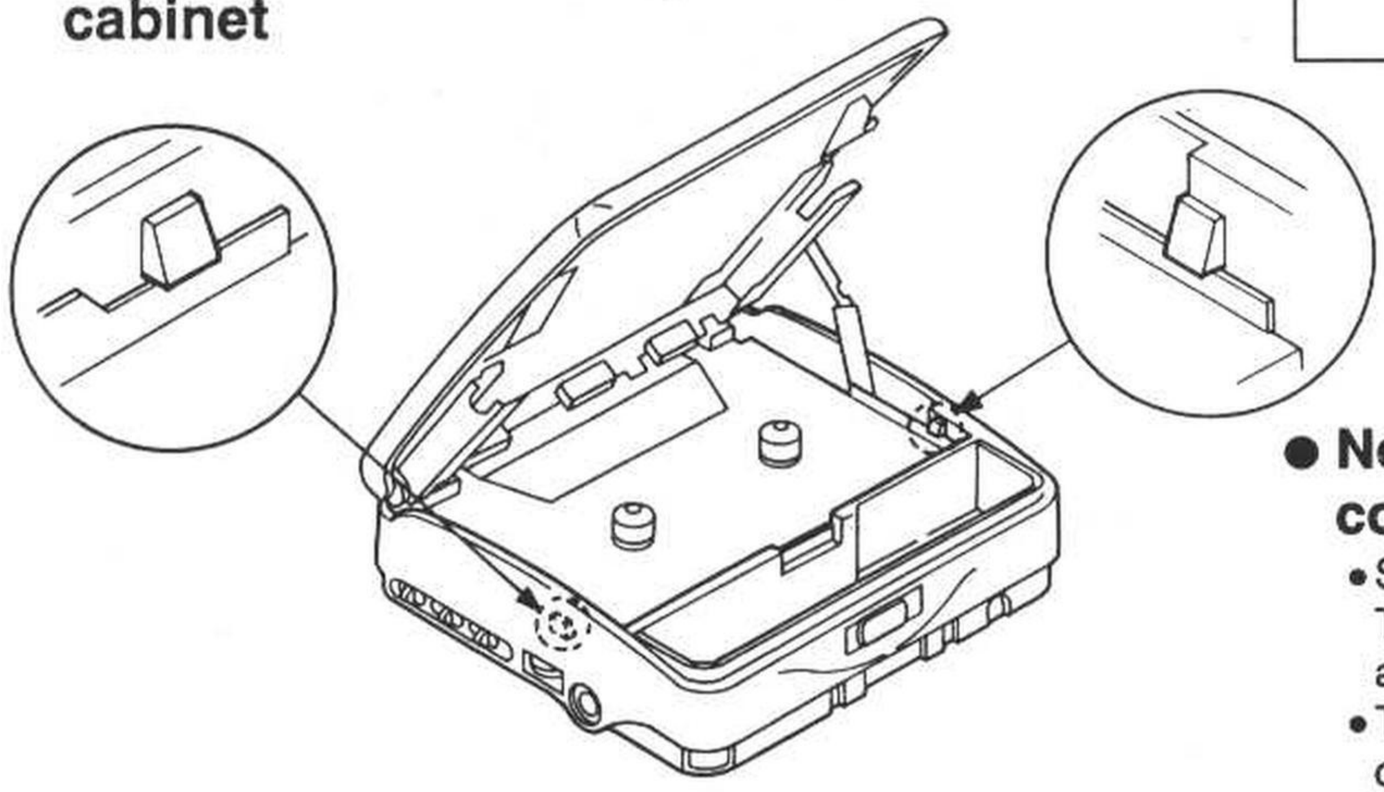

- Make sure the hooks inside the intermediate cabinet are joined to the mechanism. When installing the intermediate cabinet to unit.

● Notice for assembling the Head block assembly

1. Unhook the pinch roller springs (L) and (R) on the head block.
2. Fix the screw the hold piece support (R) on the mechanism block.
3. Interlock an axis of the hold piece support (R) by opening the head block 50 ~ 60° to the mechanism chassis, and keep the condition. Do not damage to the pinch roller and control lod.
4. Hold the hold pieces support (L) with the screw by using tweezers, and then interlock a hole at the L side of the head block. Additionally, interlock a locating hole of the mechanism chassis with a boss at the bottom of the hold piece support (L).
5. Fix the screw the hold piece support (L) on the mechanism block.
6. Hook the pinch roller springs (L) and (R).

● Notice for assembling the jack ornament and switch ornament

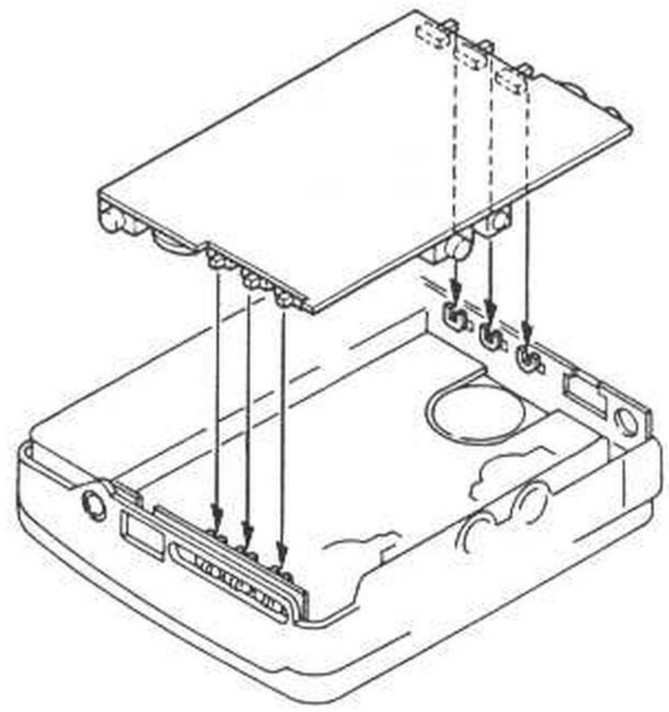

- Align the switch levers with switch knobs when installing the switch ornament.

Note: Before installing the switch knob, be sure to check the claws for defects that would render the claws unserviceable.
(If a white line like white wax on a claw is found, the claw may be broken when installing the switch knob.)

● Notice for assembling the LCD mold cover Ass'y

- Set the switch lever to the marker of switch P.C.B. The knob lever will be engaged when the top case is assembled.
- To check whether the switch works correctly, connect a circuit tester across terminals 2 and 8 (see the illustration), and check to see there is a conductivity when the knob is set to "right" side (viewed from front side).

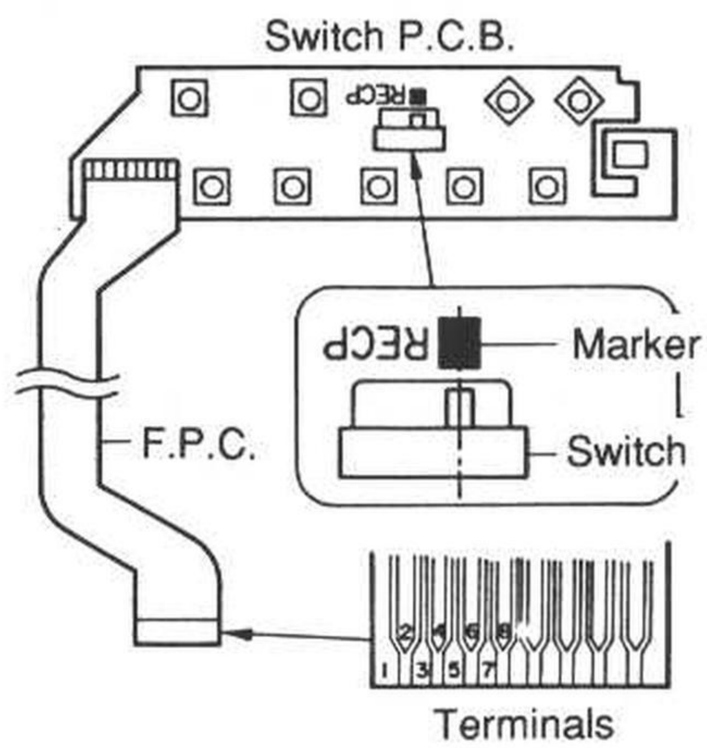

• Notice for assembling the cam gear

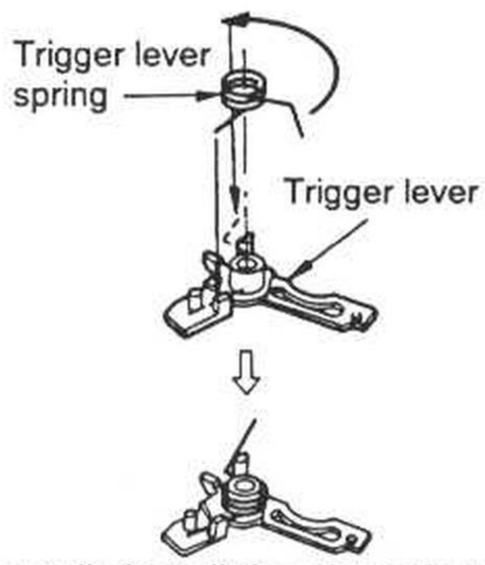

1. Temporarily install the trigger lever spring on trigger lever.

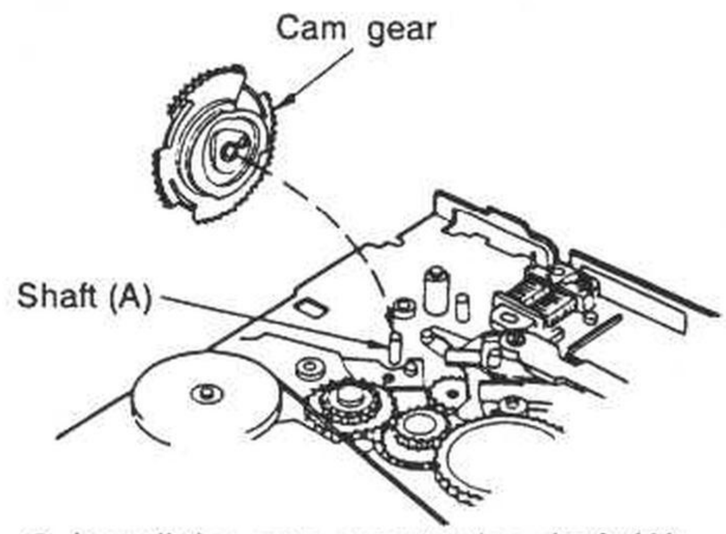

2. Install the cam gear to the shaft (A).

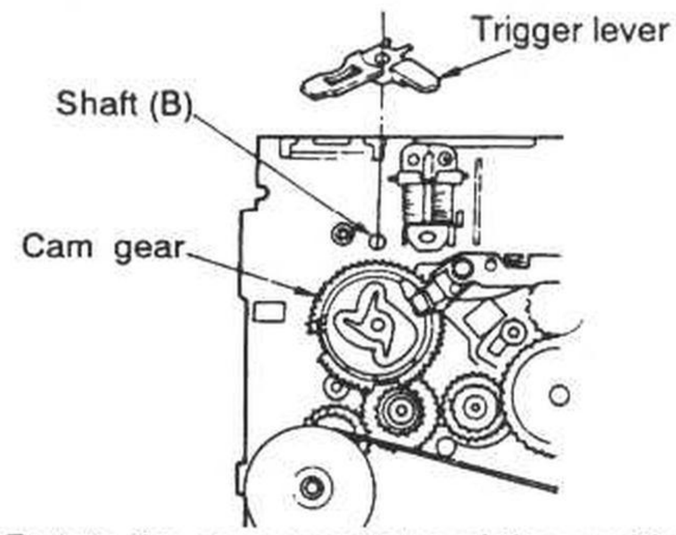

3. Rotate the cam gear toward the position as shown above.
4. Install the trigger lever to the shaft (B).

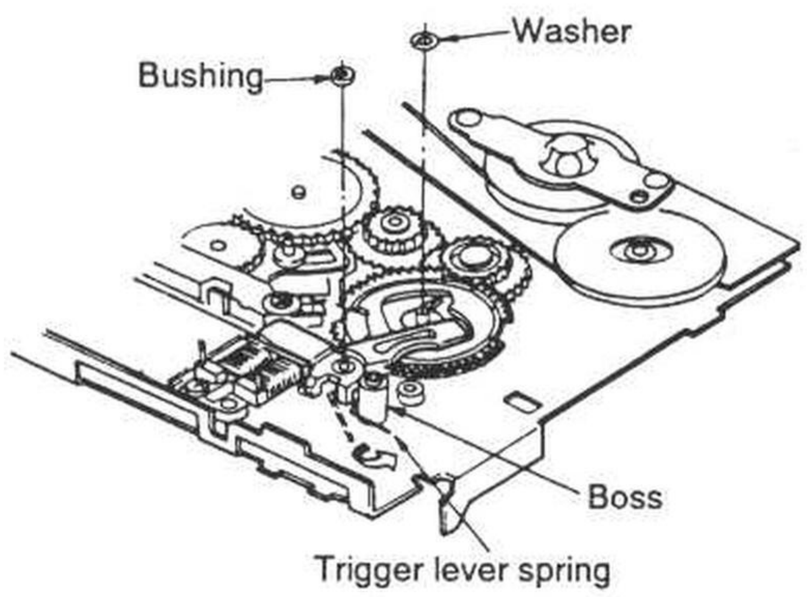

5. Latch the temporary attached trigger lever spring to the boss.
6. Install the bushing and washer.

• Confirmation of cam gear operation

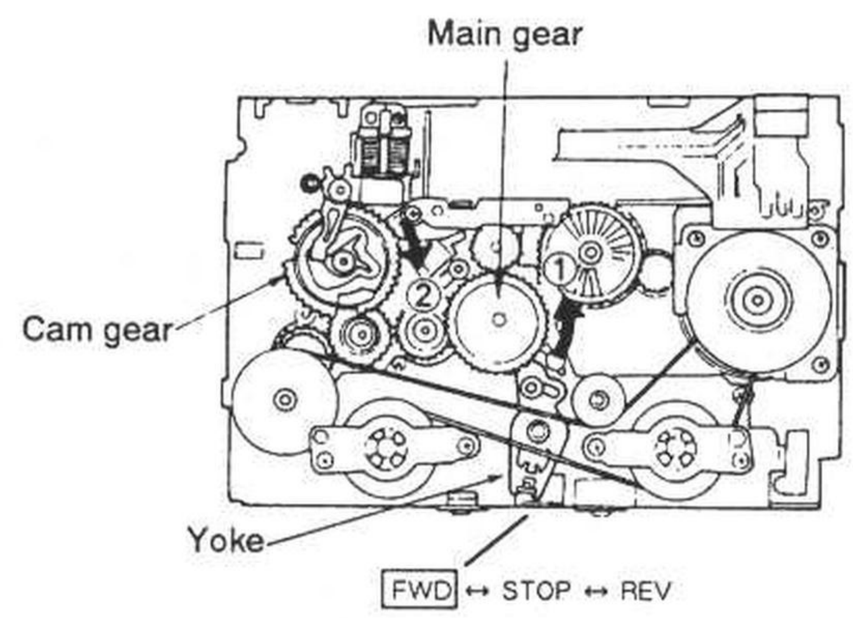

7. Rotate the main gear in the direction of arrow ①, and then the cam gear associates in the direcion of arrow ②.
8. Make sure the yoke is located at the posision "FWD" when the cam gear is ceased rotating.

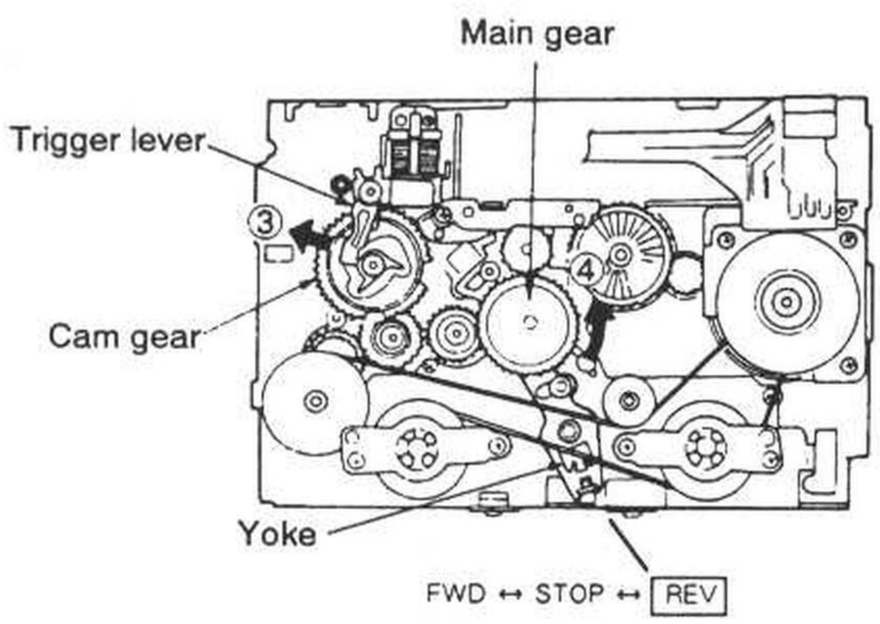

9. Pull the trigger lever one time in the direction of arrow ③, and then rotate the main gear in the direction of arrow ④.
10. Make sure the yoke is located at the position "REV" when the cam gear is ceased rotating.

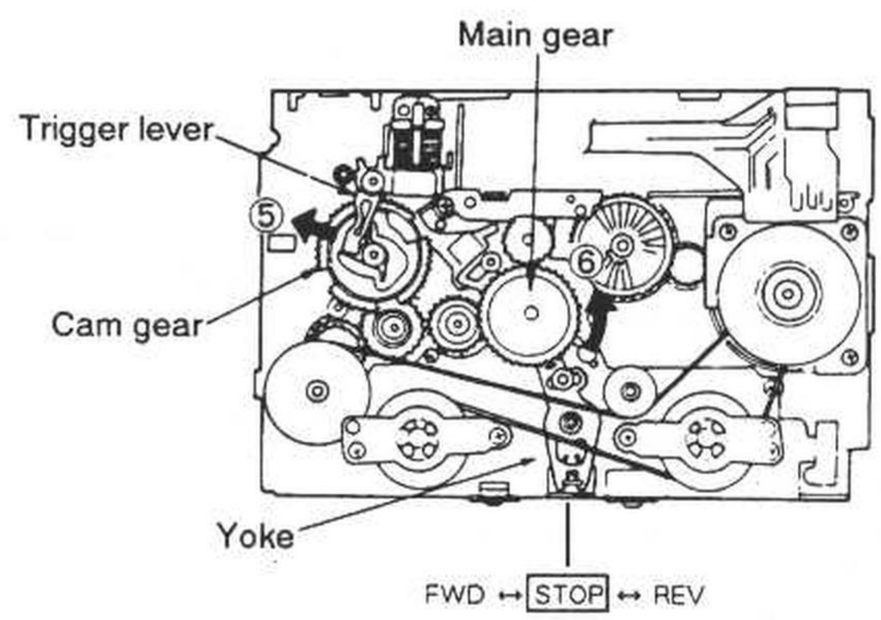

11. Further, pull the trigger lever one time in the direction of arrow ⑤, and then rotate the main gear in the direction of arrow ⑥.
12. Make sure the yoke is located at the position "STOP" when the cam gear is ceased rotating.

SERVICE TOOLS

Required Jigs, Test Tapes, and Measuring Instruments

● Test tape

Part No.	Contents	Use
SBC420 (4822 397 30071)	315Hz: 0dB, 3150Hz: –10dB 125Hz ~16kHz: –20dB 4.76cm/s 250nWb/m 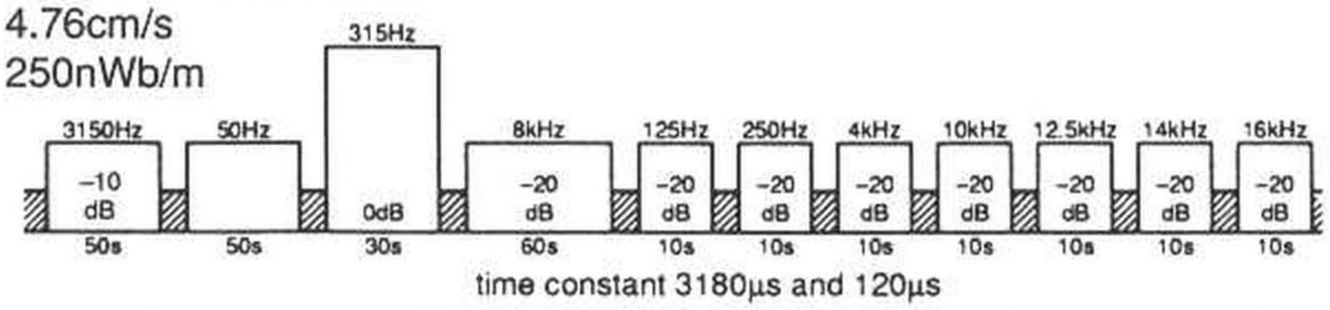 time constant 3180μs and 120μs	Playback sensitivity check and adjustment High frequency response check and adjustment Tape speed adjustment
SBC438 (4822 395 30288)	Mirror tape	Tape transport adjustment
9.6kHz (4822 397 30264)	Level tape (DCC) 9.6kHz: 0dB	Recording current adjustment
(4822 397 30252)	Blank tape (DCC)	Recording current adjustment

● Measuring instrument

Oscilloscope	Frequency counter	Digital voltmenter (Dig.-vol.)	Electronic voltmeter (E.V.M.) (AC/DC)

● Jigs and Tools

(A) MECHANISM ADJUSTMENT	Head alignment adjusting screwdriver (RZZ0296) (4822 395 50452) Ceramic screwdriver (Head alignment) (HOZAN D-281, ⊕ No. 0) (4822 395 50451) 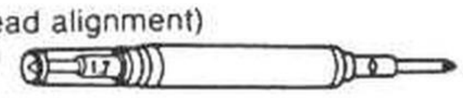 Head adjusting jig (QZZ0207) (4822 395 80411) 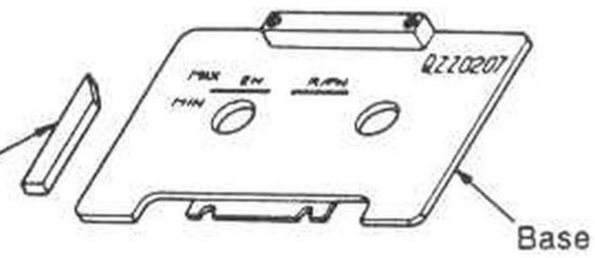
(B) ELECTRICAL ADJUSTMENT	Ceramic screwdriver (HOZAN D-281, ⊕ No. 1.7) (4822 395 50451) 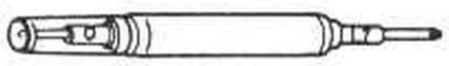

◇ MECHANISM ADJUSTMENTS (HEAD POSITION ADJUSTMENT)

● Disassembly

1. Remove the 2 screws of the arm on the cassette lid ass'y. (Ref. No. 4 ②, ③ on page 4.)
2. Remove the 3 screws of the bottom cabinet ass'y and then, take out the bottom cabinet ass'y. (Ref. No. 1 on page 3.)
3. Remove the LCD flexible board from the connector. (JU02)
4. Remove the 4 screws of the Rear protector retainer and open the center frame. Pull the cassette lid ass'y. (Ref. No. 2 ⑤, ⑥, No. 5 ①, ② on pages 3 and 4.)
5. Insert the small (–) screwdriver into a clearance between the LCD retainer (R) flange and the cassette holder in the mechanism little by little, and then remove a pin at the mechanism side (shown on the right figure).
6. Remove a pin at the left side as well.
7. Connect the connecter (JU02) with the LCD flexible board which is removed on No. 3.
8. Press the open detecting switch with an adhesive tape and hold the power "ON".
   A tape is loading without any interference with the cassette lid ass'y.
9. Perform head position adjustment after disassembling the unit to the point shown on the below.

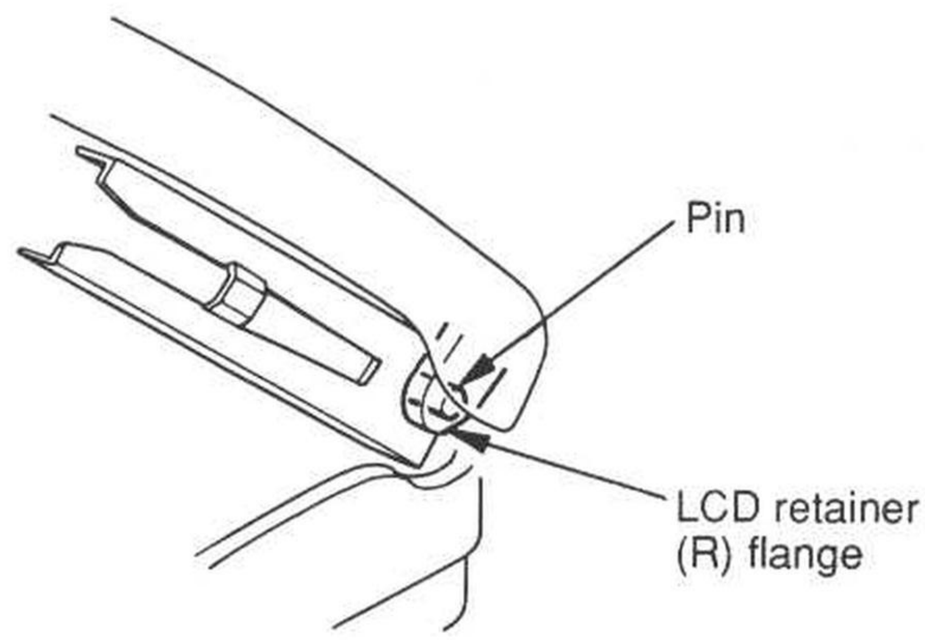

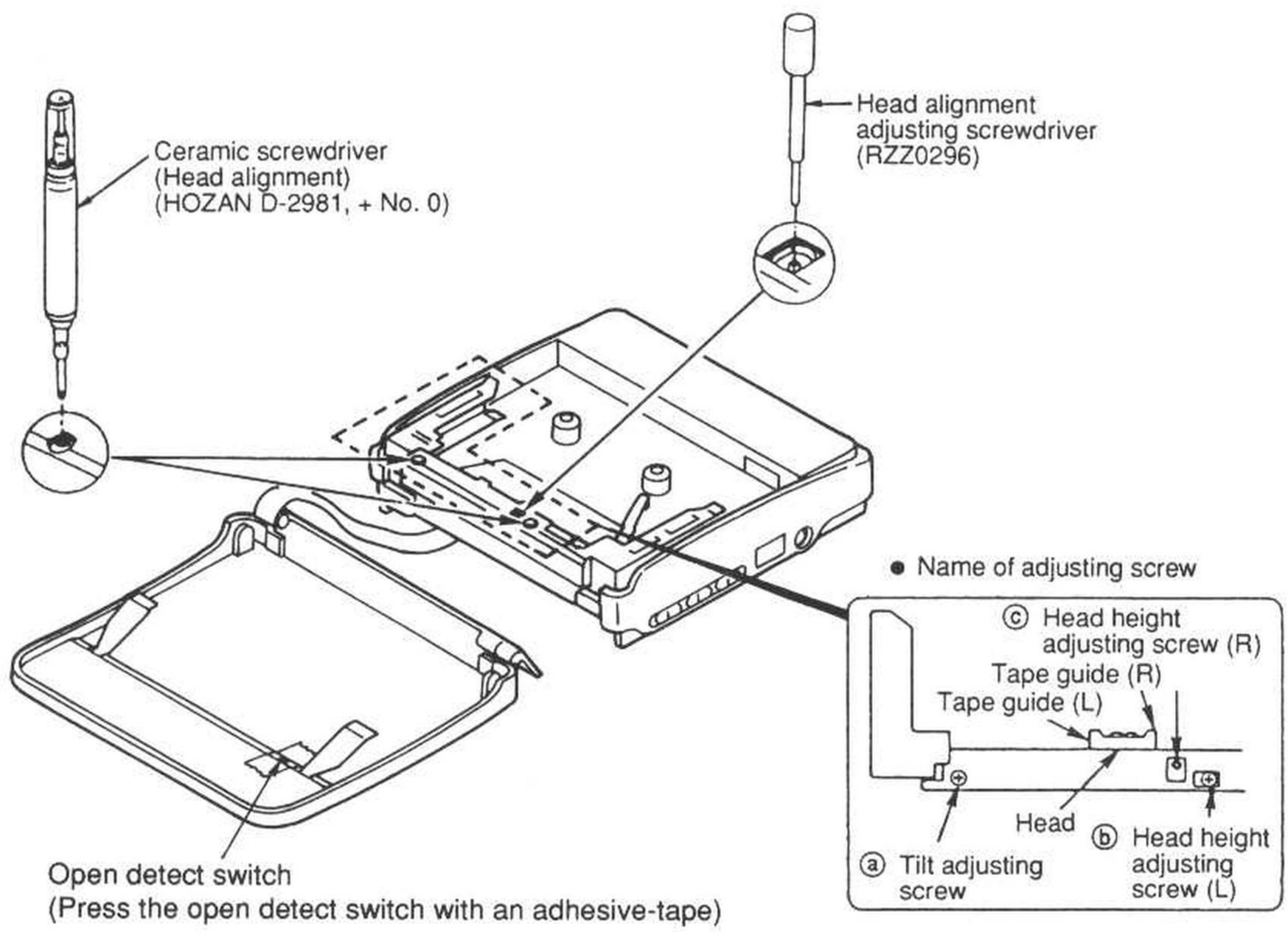

● Loading Head Adjusting Jig (QZZ0207)

1. Load the head adjusting jig (QZZ0207) into the unit.

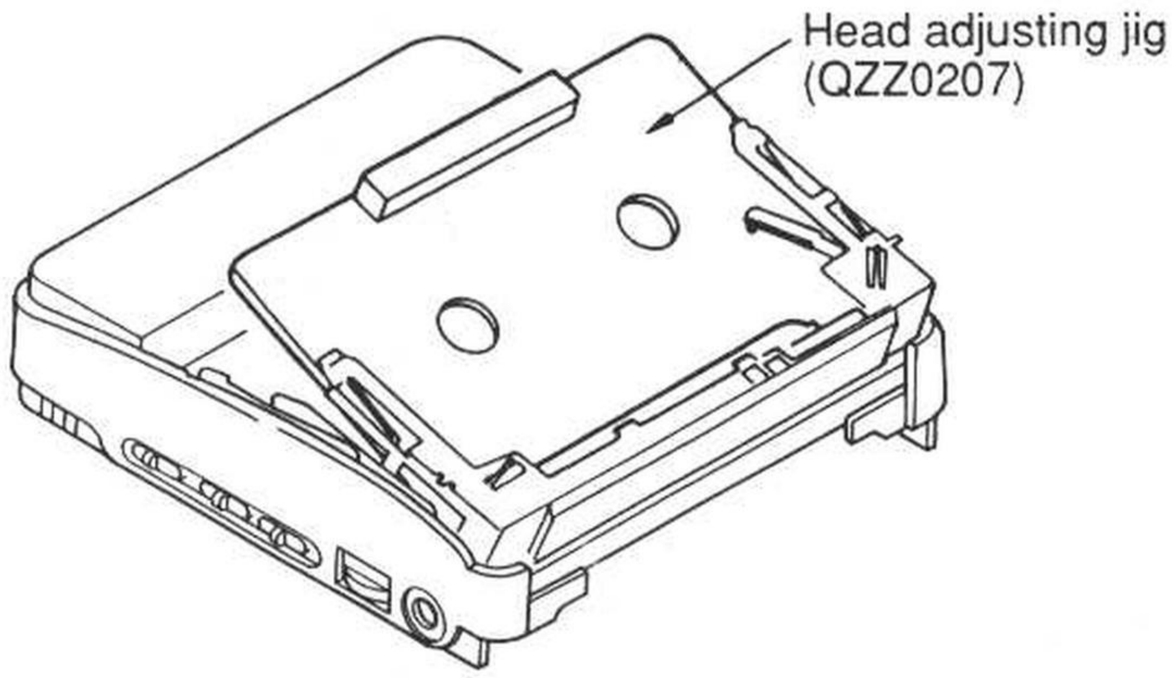

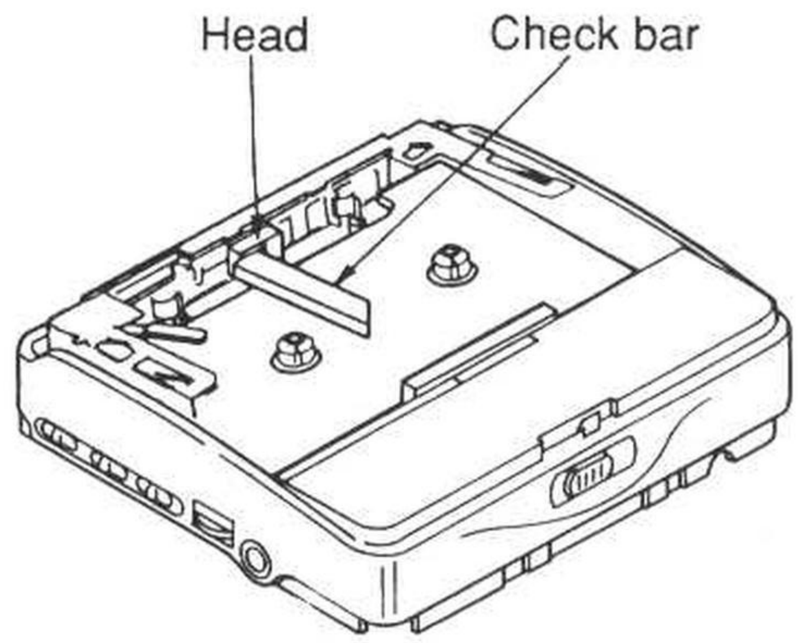

● Power Connection

1. Plug the accessory AC Adaptor (or other 6.0 V DC power supply) into the unit's DC IN jack.
2. Press the PLAY button and then rotate the take up side reel for a while by hand.

(1) Tilt Adjustment

• If the head tilts backward:

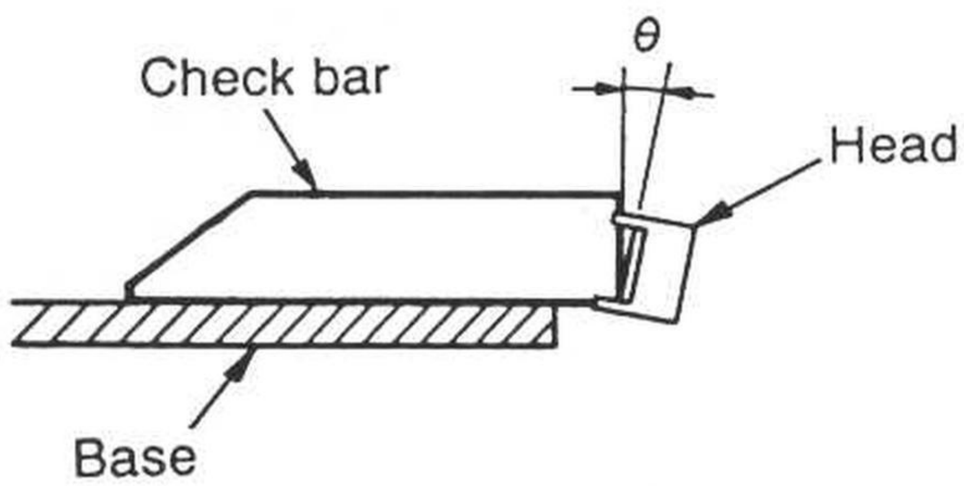

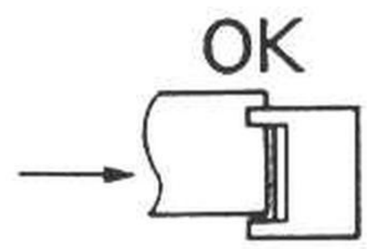

Turn the ⓐ tilt adjusting screw clockwise until the head surface is parallel with the end of the check bar (θ=within ±30′).

• If the head tilts forward:

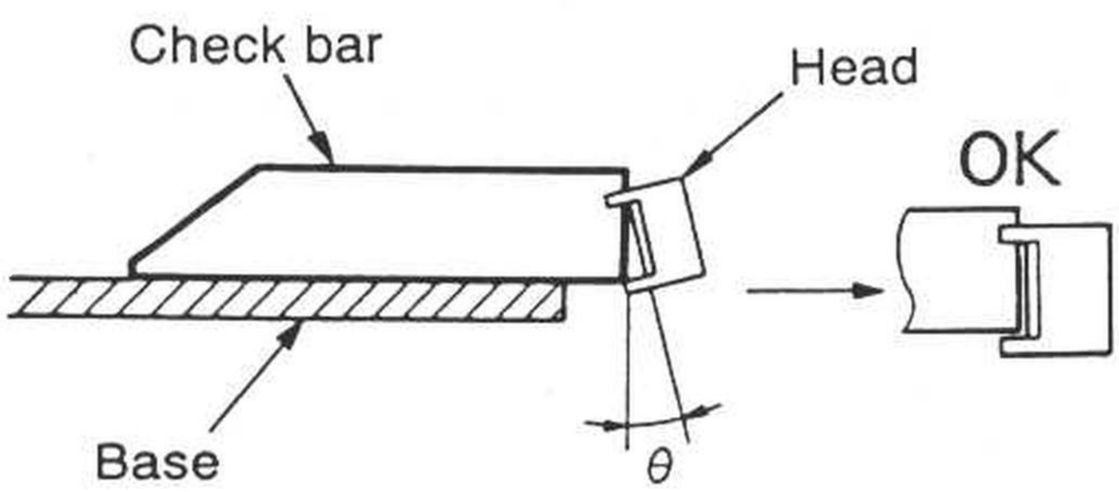

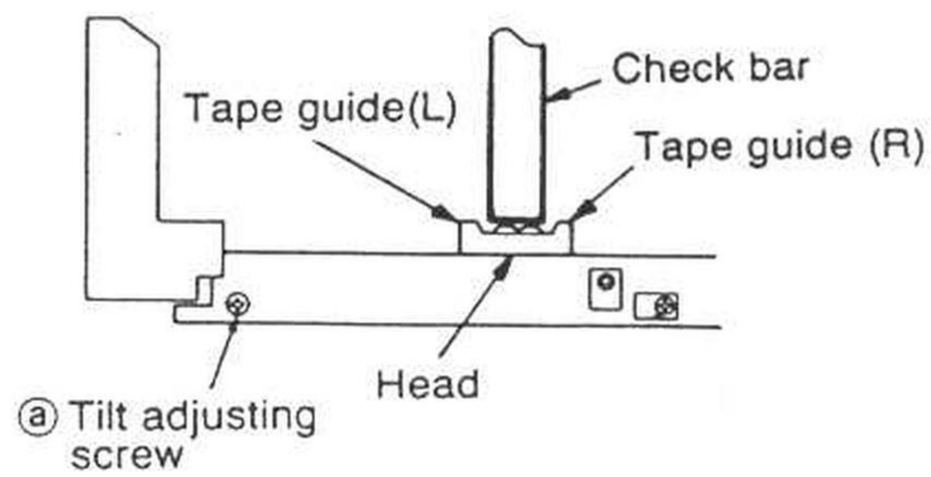

Turn ⓐ tilt adjusting screw counterclockwise until the head surface is parallel with the end of the check bar (θ=within ±30′).

(2) Guide Heights Adjustment

- **Adjusting Guide (L)**

Insert the check bar into tape guide (L) as shown below.

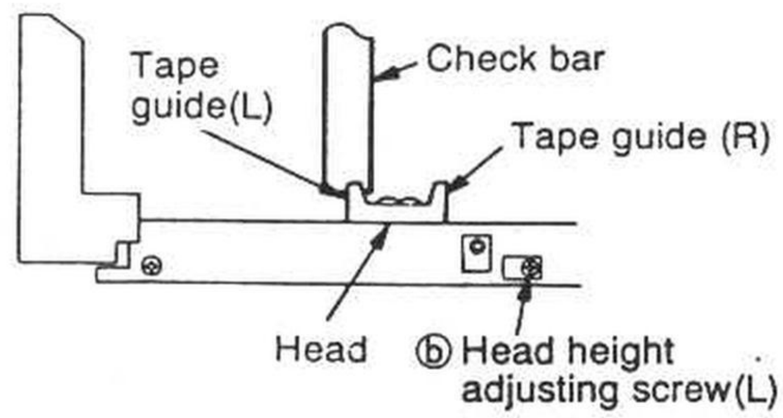

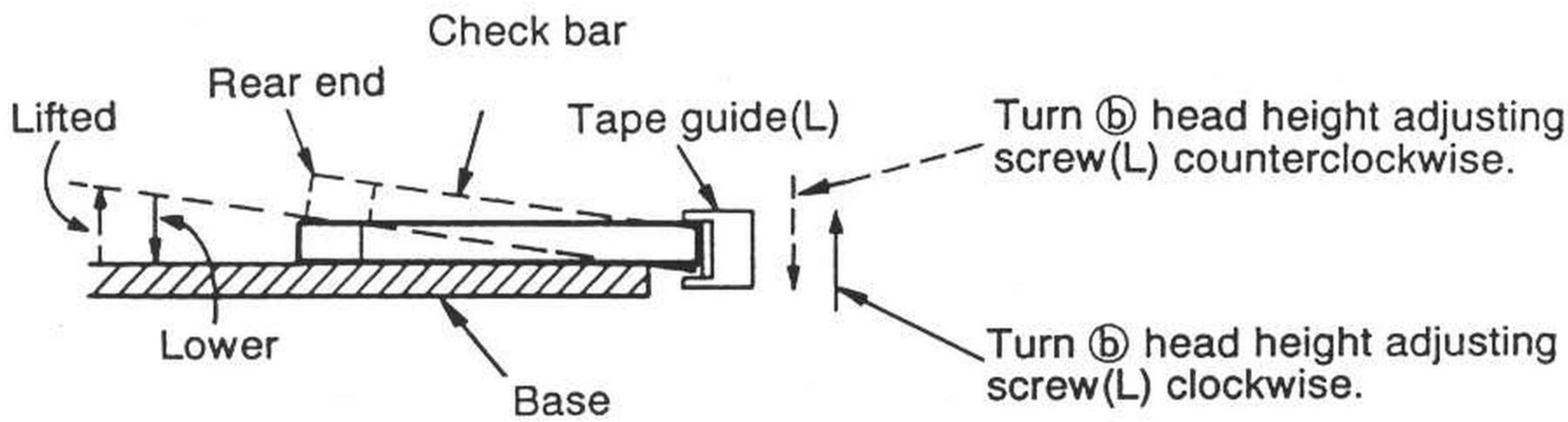

Turn ⓑ head height adjusting screw (L) counterclockwise to lift the rear end of the check bar off the base, then slowly turn the screw clockwise to lower the rear end until it is parallel and rests on the base.

- **Adjusting Guide (R)**

Insert the check bar into tape guide (R) as shown below.

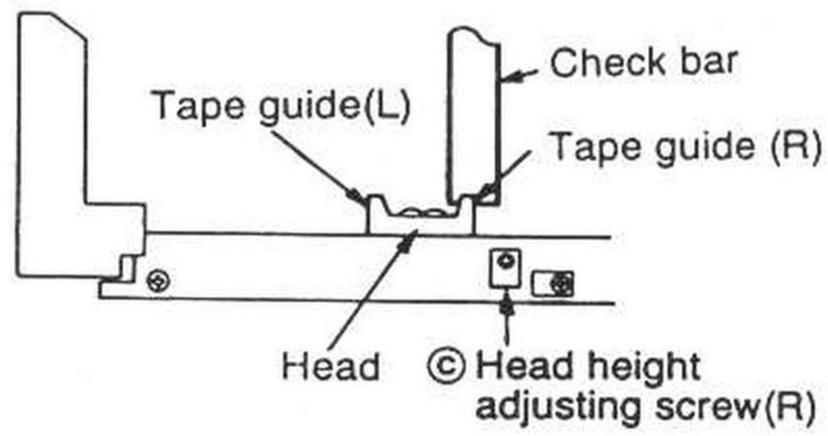

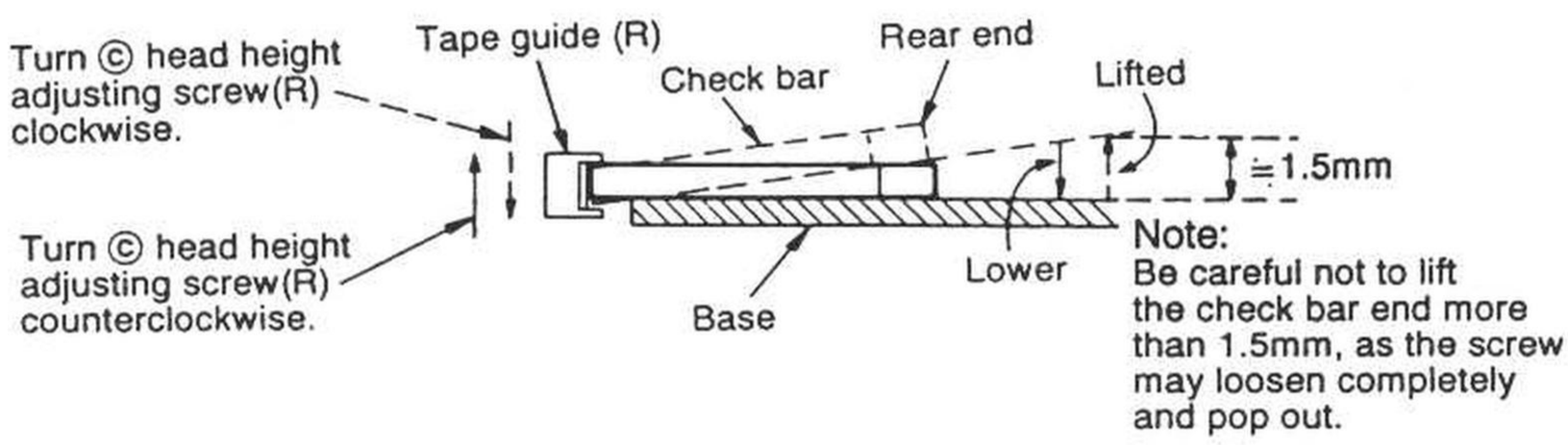

Turn ⓒ head height adjusting screw (R) clockwise to lift the rear end of the check bar off the base, then slowly turn the screw counterclockwise to lower the rear end until it is parallel and rests on the base.

Note: The head arm has a slight amount of play. Make sure that the rear end of the check bar completely rests on the base after the screwdriver is removed.

(3) Tape Transport Adjustment

- Load the mirror tape (SBC438) into the unit and check tape transport in PLAY mode, Check both forward and reverse directions. If the top edge of the tape is curled, remove the curl by following the steps below:

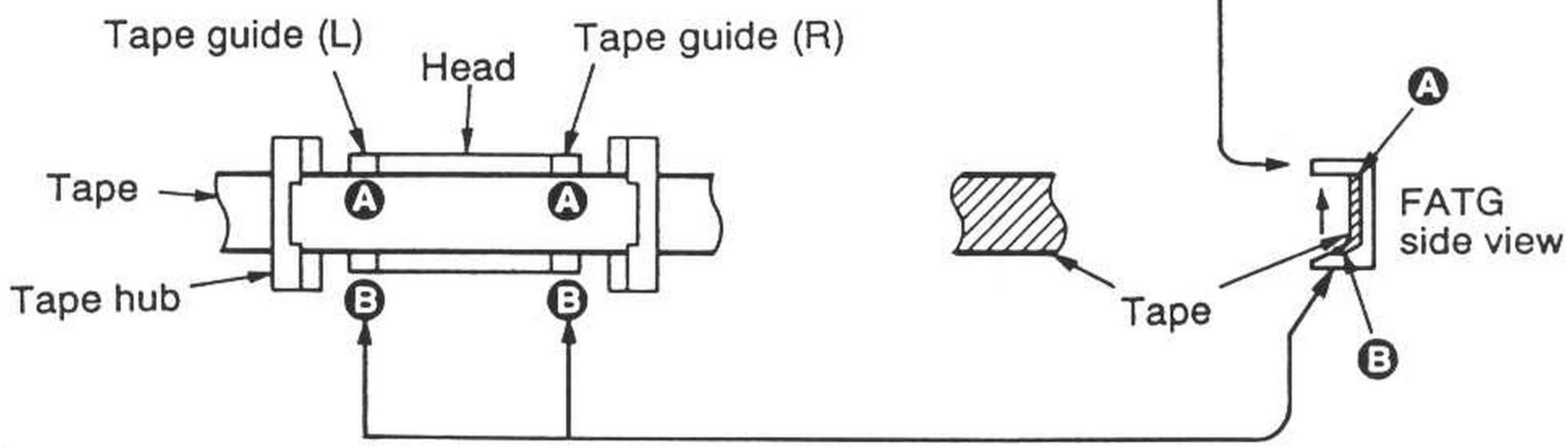

A curled tape edge will not occur at the bottom Ⓑ of the tape guide, as the tape is pushed up along a slope.
Check for a curled tape edge at the top Ⓐ of the tape guide.

① If a curled tape edge occurs on FATG (L):
Turn ⓒ head height adjusting screw (R) clockwise until the curl is removed.

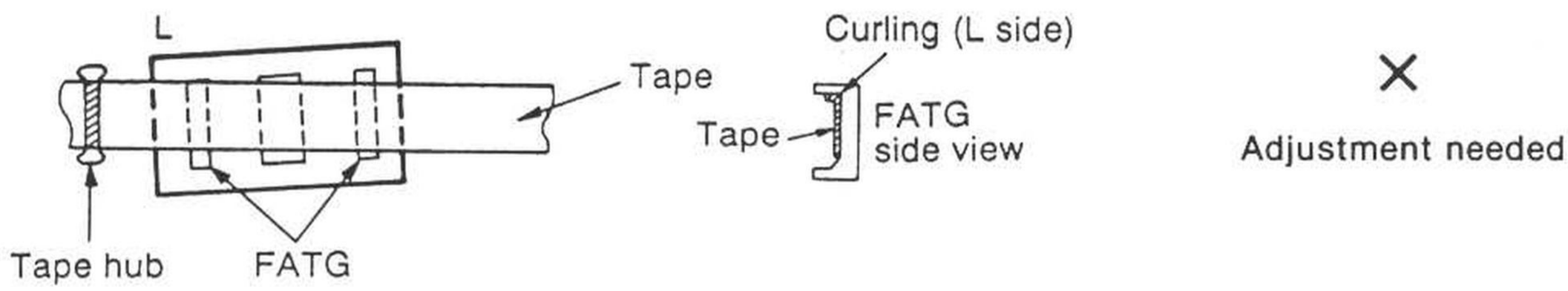

② If a curled tape edge occurs on FATG (R):
Turn ⓒ head height adjusting screw (R) counterclockwise until the curl is removed.

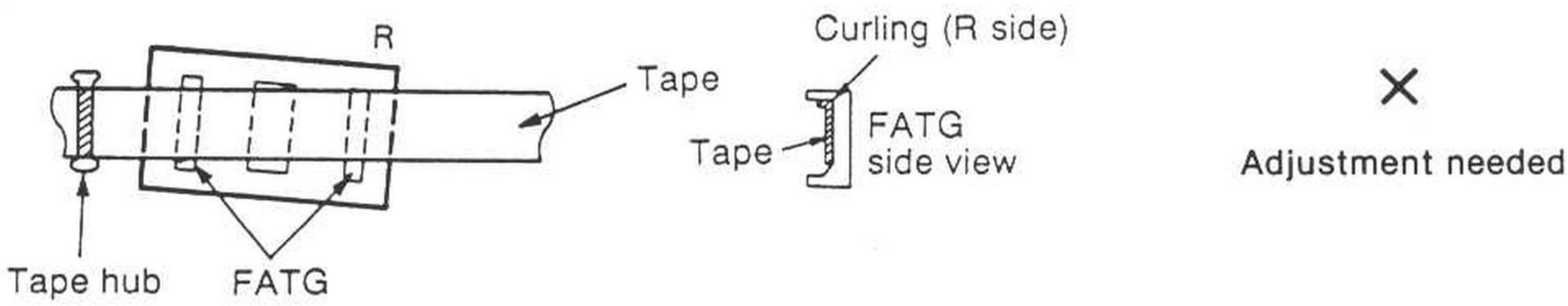

③ When the relative positioning of the tape hub and tape head (tape guides) is correct:

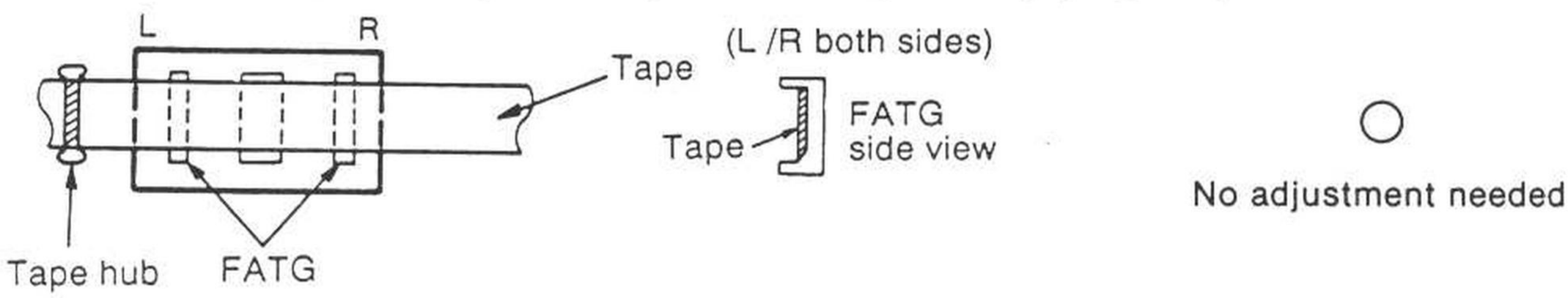

After completing the above adjustment, run the tape both forward and backward to check for a curled tape edge. If it still occurs, repeat step ① or ②.

Note: Since the head arm has a slight amount of play, the degree to which the tape edge curls will differ before and after the adjustment screwdriver is removed. (Allow a sufficient adjustment margin.)

◘ ELECTRICAL ADJUSTMENTS

● Disassembly

1. Complete disassembly instruction Ref. No. 1 on page 3. (Tape speed adjustment)
2. Complete disassembly instruction Ref. No. 2 on page 3. (Other adjustments)
3. With the unit disassembled, plug the accessory AC Adaptor (or other 6V DC power supply) into the unit's DC IN jack.
4. Connect a measuring instrument to the LINE OUT jack.

Note: Use the in-ear phones for audio monitoring.

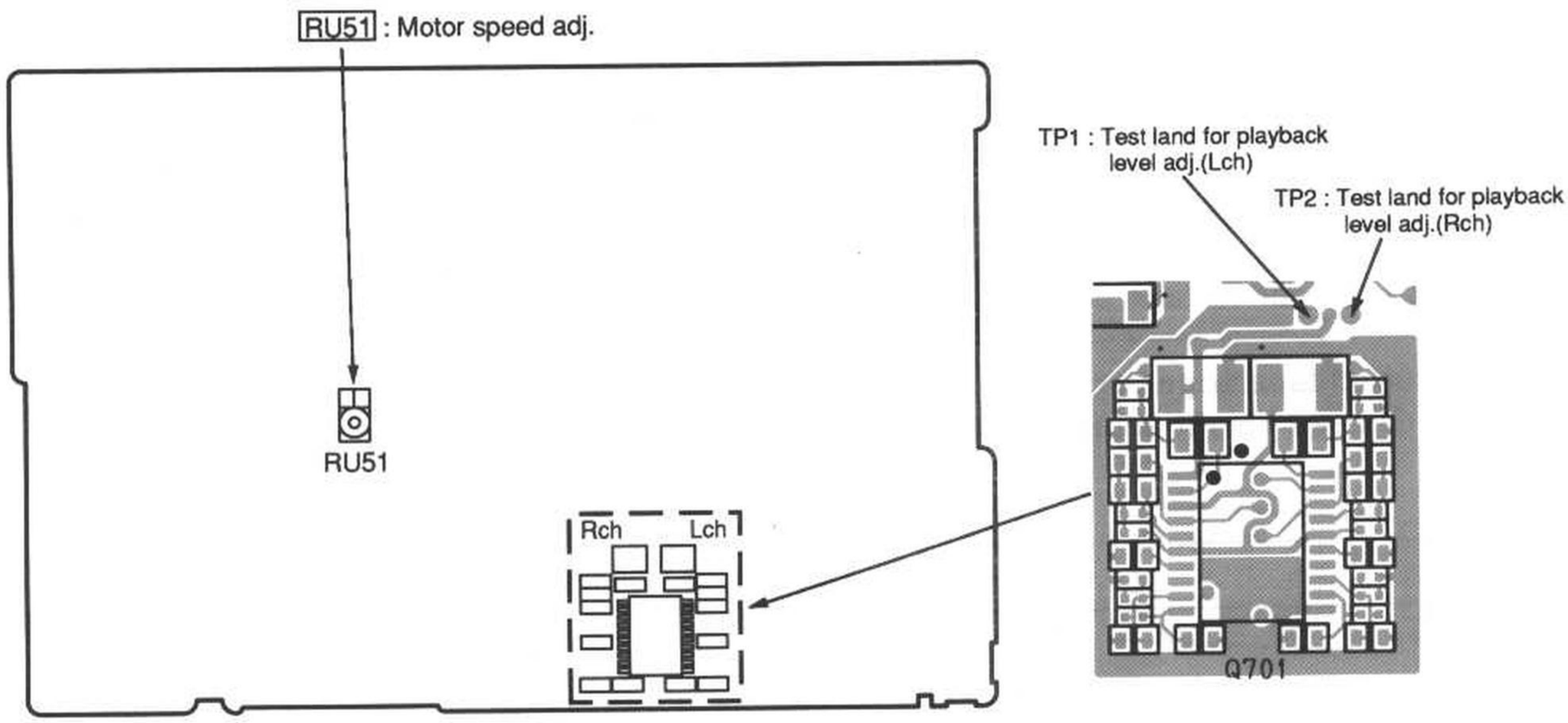

Fig. 1 MAIN PCB (P503)

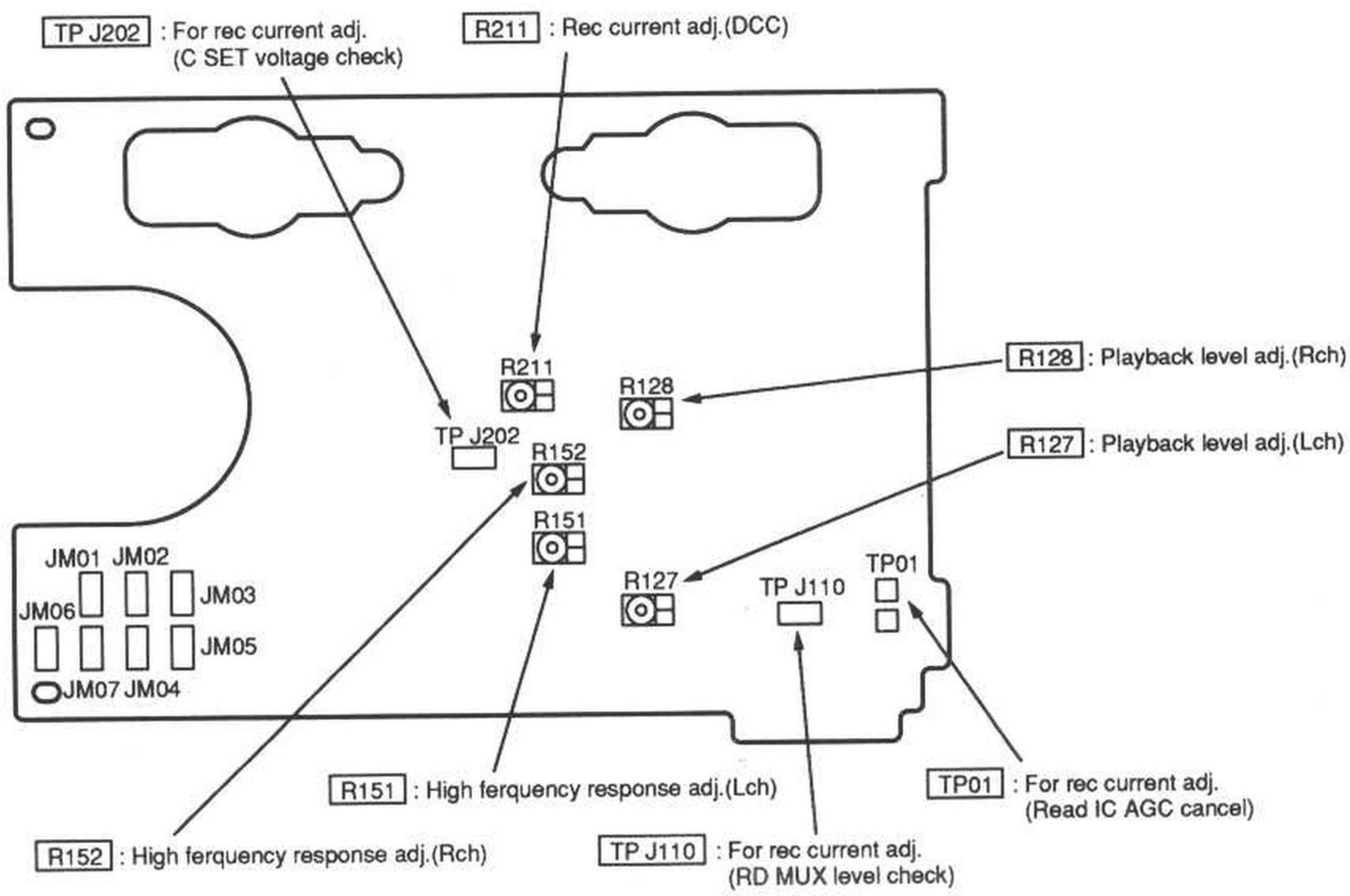

Fig. 2 MECHANISM PCB (P103)

(1) Tape Speed Adjustment

Preparation		Setup
Test tape and tool required	Measuring instruments required	
1. ACC test tape (SBC420) 2. Ceramic screwdriver (HOZAN D-281,⊕No. 1.7)	1. Frequency counter	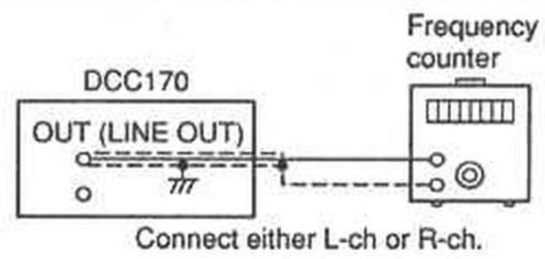

- **Caution**

  This adjustment can be made only in the (4) Motor Speed Adjustment mode under Factory mode.

  1. Set the mode to the "Motor Speed Adjustment Mode" under Factory Mode. (Refer to page 20.)
  2. Play back the ACC Test Tape (SBC420: 3150Hz, –10dB) forward.
  3. Adjust RU51 until the frequency counter reads 3150Hz.

     Adjustment Target: 3150 ±15Hz

  4. Reverse the direction of tape transport and perform the same check.

     Check Target: 3150 ±30Hz

Note: Four digit number (hexa value) displayed on the LCD is a voltage value of RU51 A/D-converted by the microcomputer.

(2) Playback Sensitivity Check

Preparation		Setup
Test tape and tool required	Measuring instruments required	
1. ACC test tape (SBC420)	1. Oscilloscope 2. Electronic voltmeter (EVM) (AC range)	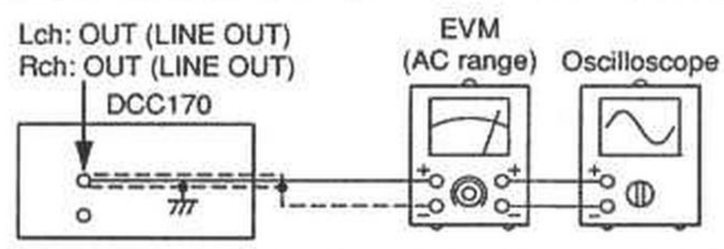

- **Check Procedure**

  1. Play back the ACC Test Tape (SBC420: 315Hz, 0dB) forward.
  2. Check that the line output levels on both channels fall within the following limits:

     Check Target: 450mV ±1dB

  3. Reverse the direction of tape transport and perform the same check.

- If it is still outside the limits after realignment, do the Playback Sensitivity Adjustment described in item (3).

(3) Playback Sensitivity Adjustment

Preparation		Setup
Test tape and tool required	Measuring instruments required	
1. ACC test tape (SBC420) 2. Ceramic screwdriver (HOZAN D-281,⊕No. 1.7)	1. Oscilloscope 2. Electronic voltmeter (EVM) (AC range)	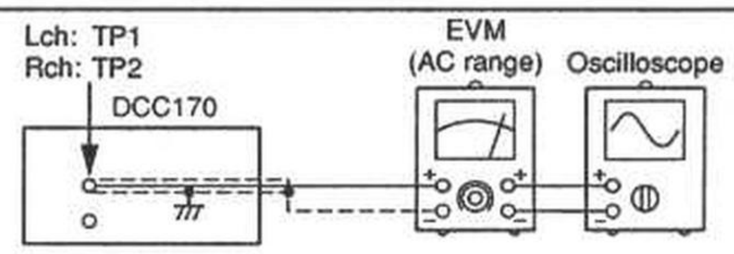

- **Adjustment Procedure**

  1. Play back the ACC Test Tape (SBC420: 315Hz, 0dB) forward.
  2. Adjust R127 (L ch) and R128 (R ch) until the test land TP1 (Lch) and TP2 (R ch) levels on both channels fall within the following limits:

     Adjustment Target: 113mV ±1dB

  3. Reverse the direction of tape transport and perform the same check.

(4) High Frequency Response Check and Adjustment

Cautions:
- Be sure to check the frequency response after the head assembly is replaced.
- If the frequency response does not fall within the limits, perform the following adjustment.

Frequency Response Check

1. Play back 250Hz, –20dB and 12.5kHz, –20dB of the ACC Test Tape (SBC420) forward, and verify that the level difference between the two bands is within 0 ± 1dB.
2. Reverse the direction of tape transport and perform the same check.

Preparation		Setup
Test tape and tool required	Measuring instruments required	
1. ACC test tape (SBC420) 2. Ceramic screwdriver (HOZAN D-281,⊕No. 1.7)	1. Frequency counter 2. Electronic voltmeter (EVM) (AC range)	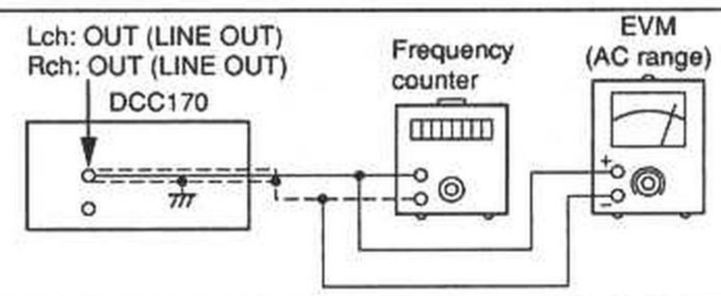

- **Adjustment Procedure**
  1. While playing back 250Hz, –20dB of ACC Test Tape (SBC420) forward, measure the LINE OUT levels on both channels. Use these levels as standards.
  2. Play back 12.5kHz, –20dB of the same test tape forward, and adjust R151 (L ch) and R152 (R ch) until the LINE OUT levels are identical to the standard levels obtained above.

     Adjustment Target: 0 ±0.5dB
  3. Reverse the direction of tape transport and perform the same check.

     Check Target: 0 ±1.5dB

(5) Recording Current Adjustment

- Always perform the adjustment when the head block is replaced.

Preparation		Setup
Test tape and tool required	Measuring instruments required	
1. DCC test tape (9.6kHz level tape) 2. DCC blank tape 3. Ceramic screwdriver (HOZAN D-281,⊕No. 1.7)	1. Digital voltmeter (Dig.-vol.) 2. Oscilloscope	• Recording • Play back 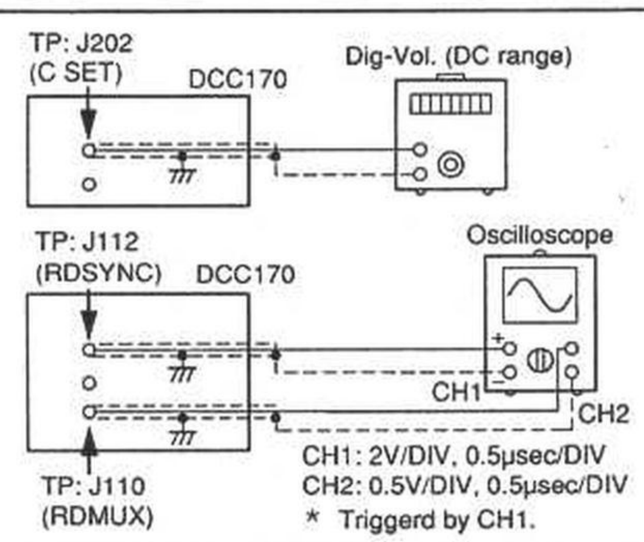

1. Press the STOP button twice to turn the unit OFF.
2. Short lands of TP01. (Refer to Fig. 1 MECHANISM PCB.)
3. Play back the DCC test tape (9.6kHz, 0dB).
4. Measure that the TP: J110 (peak to peak level), J110:RDMUX level by Oscilloscope. Use this level as standard.

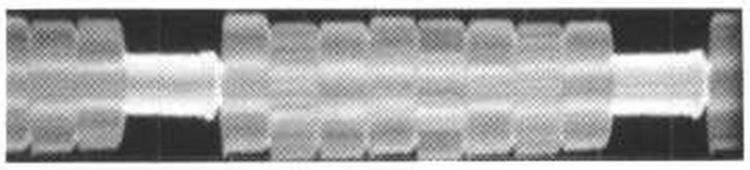

5. Next, change the DCC test tape to a DCC blank tape and set the unit to the recording status. (Record music signals.)
6. Adjust R211 until voltage value at TP: J202 shows 130mV~ 140mVDC. (Temporary adjustment)
7. Play back the music signals recorded in the step 6, and measure the voltage at TP:J110 again (peak to peak level). Check this level and the standard level in 4, to see their level difference is within 0±100mV.

   Adjustment Target: 0 ±100mV
8. If the value is out of the limit, repeat steps 5 ~ 7.
   - If the level is higher than the reference level, rotate R211 counterclockwise to decrease the voltage (C SET) at J202.
   - If the level is lower than the reference level, rotate R211 clockwise to increase the voltage (C SET) at J202.
9. Open the short-circuit at lands of TP01.

Caution:
For each head, a recommended recording current exists individually. If this value is not adjusted correctly, the RDMUX value does not match between a self recorded tape and prerecorded tape. Moreover, if a recording is made at a deep layer with a high value, the previous records can not be erased when an overwrite recording is made at that area later. As a consequence the error rate will be increased at that area.

◘ FACTORY/SERVICE MODE

● Mode ON/OFF

ON: 1. Insert a DCC tape.
2. In the power off or the stop mode, press the COUNTER button and the PLAY/SIDE button over 3 times at the same time.

LCD → [□FACTORY□024D□] (14 digits display)

OFF: Press the STOP/OFF button. (Disappear the indication after showing the "power off".)

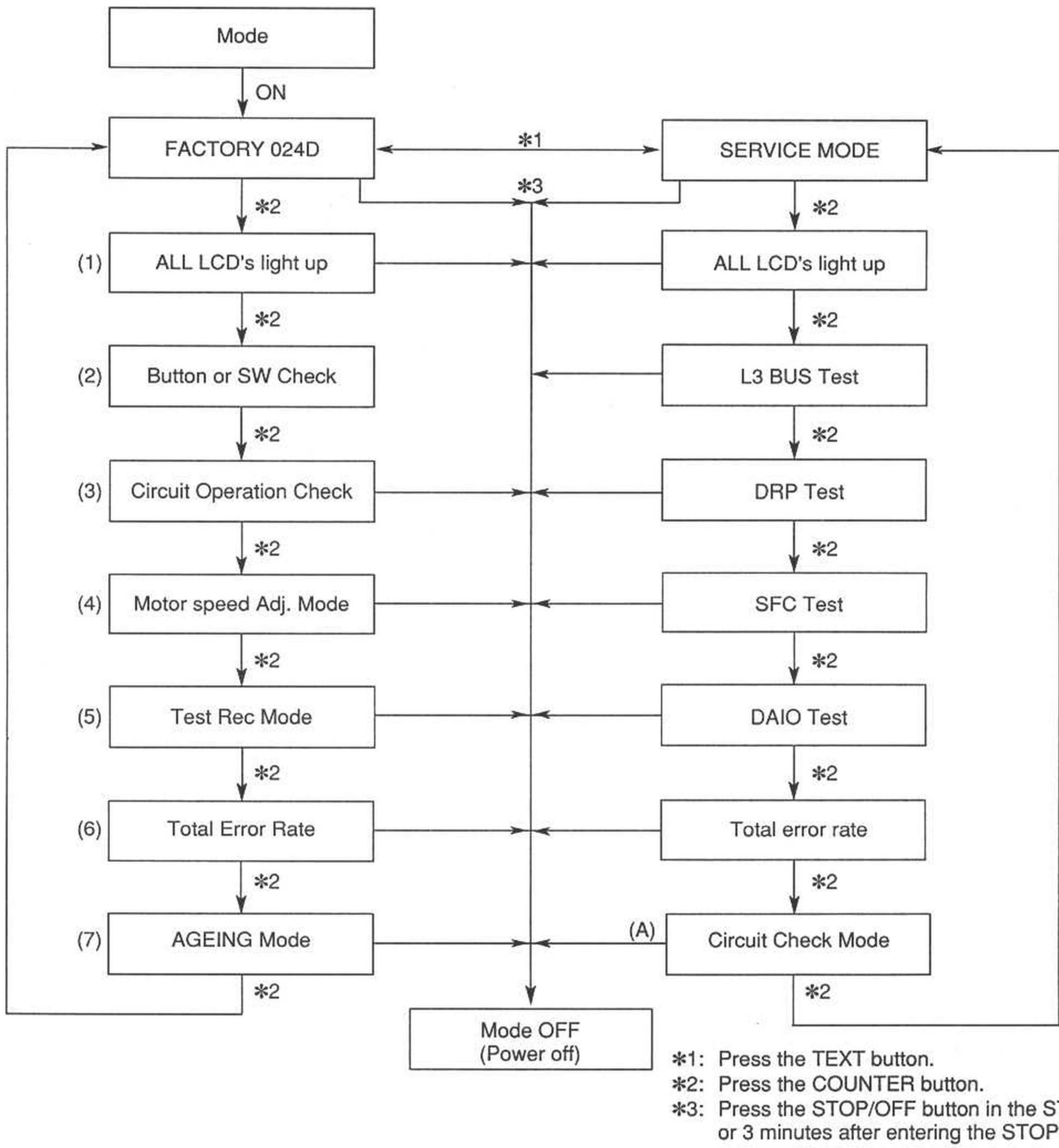

*1: Press the TEXT button.
*2: Press the COUNTER button.
*3: Press the STOP/OFF button in the STOP mode or 3 minutes after entering the STOP mode.

● Factory mode

(1) All LCD's light up

1. Set in the FACTORY mode.
2. Press the COUNTER button once.

LCD →

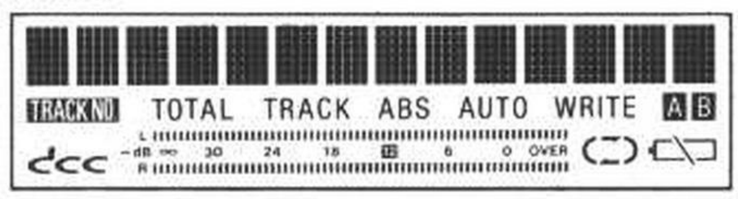

(2) Button, SW ON/OFF

1. Set in the FACTORY mode.
2. Press the COUNTER button twice. (Or, press the COUNTER button once on the all LCD's light up condition.)
3. Shown BUTTON and SW ON/OFF below.

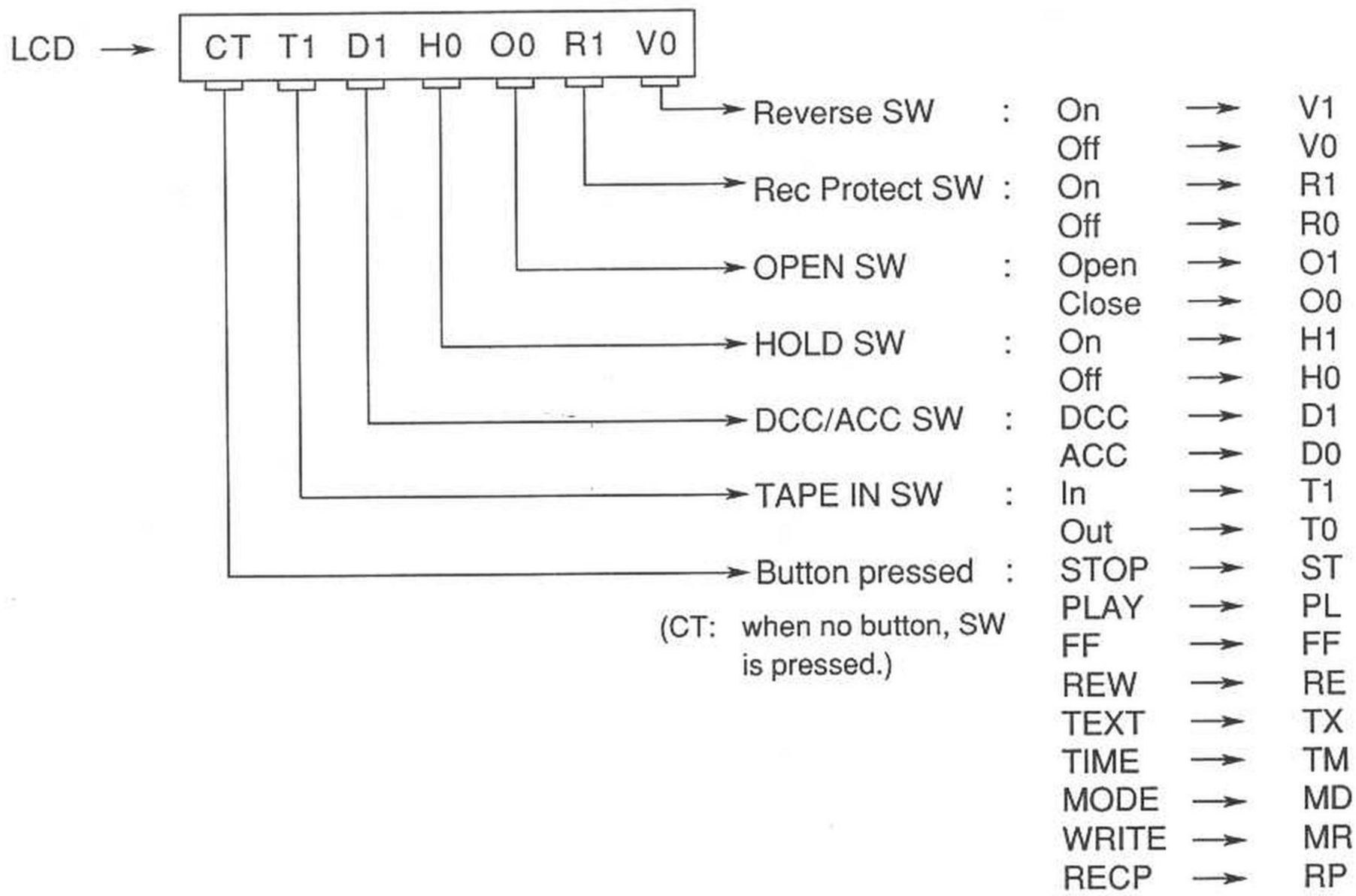

(3) Circuit operation

1. Set in the FACTORY mode.
2. Press the COUNTER button 3 times. (Or, press the COUNTER button once in the BUTTON, SW ON/OFF condition.)

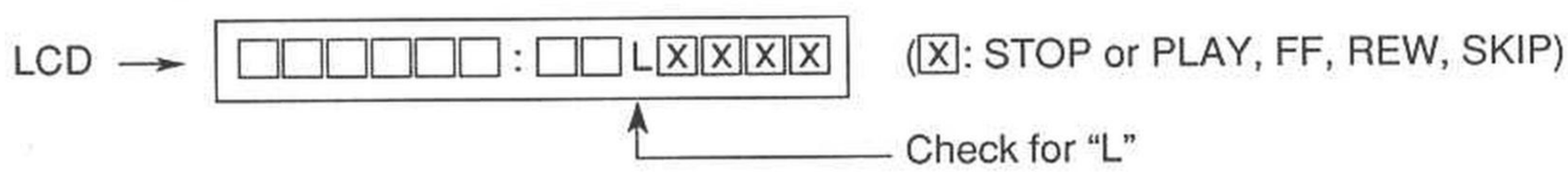

(4) Motor speed adjustment mode

1. Set in the FACTORY mode.
2. Press the COUNTER button 4 times.
   (Or, press the COUNTER button once in the circuit operation.)

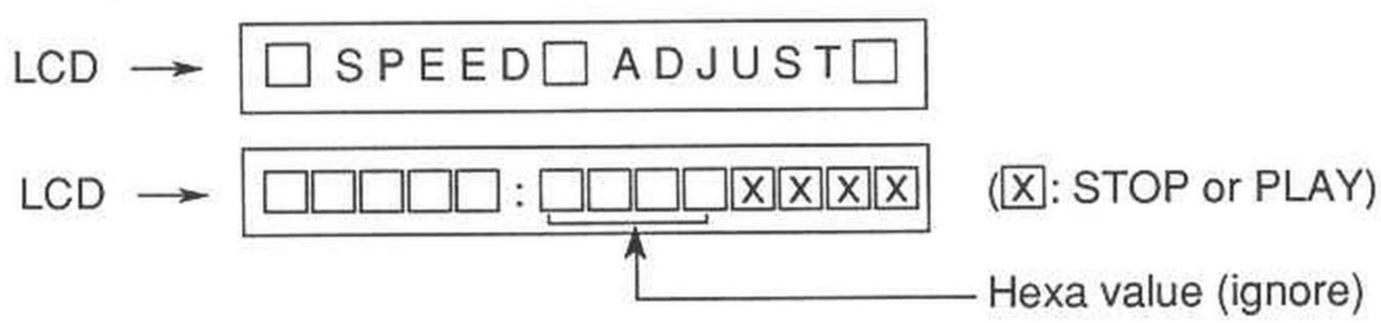

Notes:

1. Motor speed can be adjusted in this mode only.
2. Refer to "Tape speed adjustment" on page 17.

(5) Test Rec mode

1. Set in the FACTORY mode.
2. Press the COUNTER button 5 times.
   (Or, press the COUNTER button once in the motor speed adjustment mode.)

Note: Marker write does not operate at start and stop of the recording.

(6) Total error rate

1. Set in the FACTORY mode.
2. Press the COUNTER button 6 times.
   (Or, press the COUNTER button once in the test rec mode.)

LCD → [□-□□□-□□□□□□□□]

Note: Refer Step 3 of Troubleshooting on page 25.

(7) Ageing mode

1. Set in the FACTORY mode.
2. Press the COUNTER button 7 times.
   (Or, press the COUNTER button once in the total error rate.)

LCD → [□ AGEING □ MODE □ □]

3. Repeat the same operating after indicated.

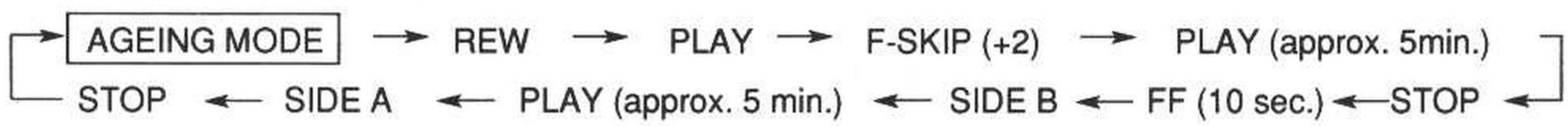

4. When pressing the COUNTER button, reset in the "FACTORY MODE".

● Service mode

Refer Step 3 of Troubleshooting on page 25. (Except, (A) Circuit Check mode.)

(A) Circuit check mode

This check mode allows checks for both the Main PCB circuit and mechanism operations with Mechanism PCB separated from the mechanism. (Reel sensor and F/R switch signals are ignored.)

● Check procedure

1. Set in the FACTORY mode.
2. With the LCD shown "FACTORY 024D", press the "TEXT" button, and "SERVICE MODE" will appear on the LCD.

LCD → [□ SERVICE □ MODE □]

3. Press the COUNTER button 7 times.

LCD → [□□□□□□ : □□ R [X][X][X][X]] ([X]: STOP or PLAY)

Check for "R"

- **Disassembly**
  a) Follow the procedures in Ref. No. 3 in the Disassembly instructions. (Refer page 4.)
  b) Follow the procedures in Ref. No. 10 in the Disassembly instructions. (Refer page 6.)
  In this care, short-circuit the TAPE IN terminals of the mechanism PCB.

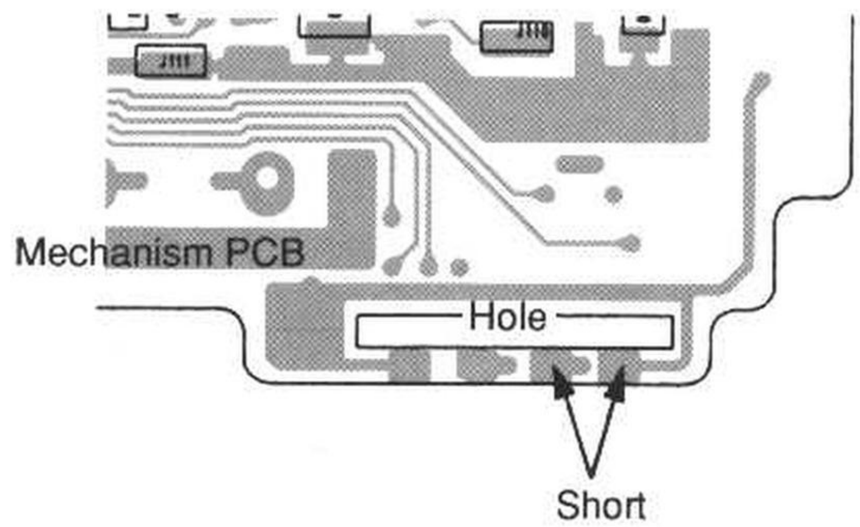

c) Arrange as shown below.

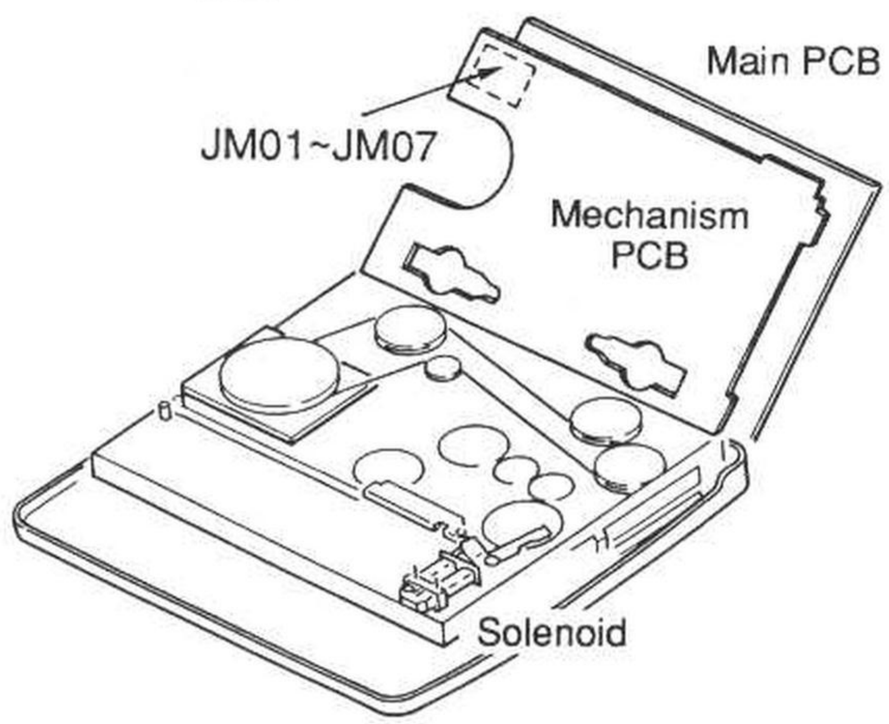

d) Connect checker terminals (JM01~JM07) on the mechanism PCB to each pin of the motor and solenoid on the mechanism side, using cables with chips. (Refer to illustration shown below.)

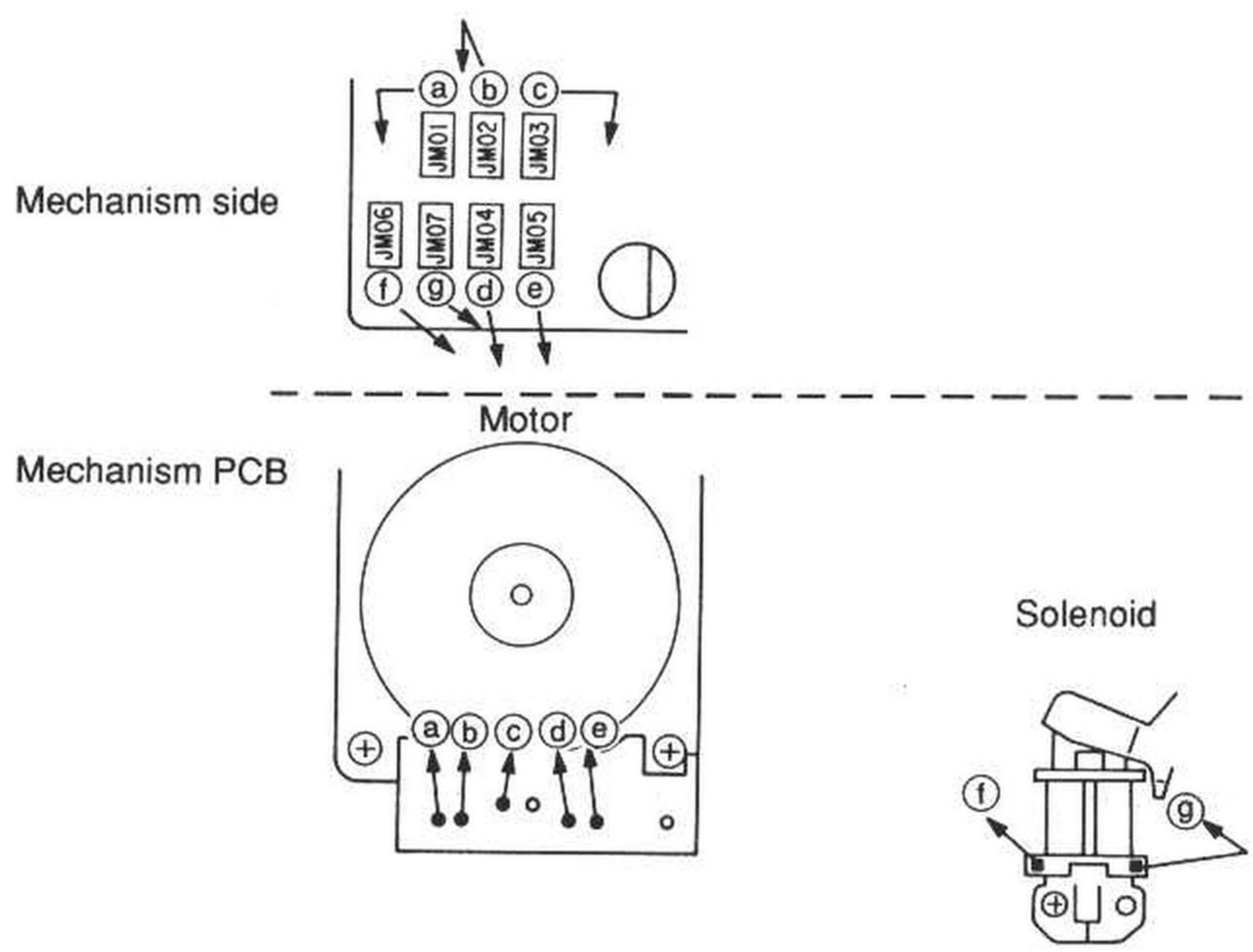

◇ TROUBLESHOOTING

Step 1. Checking Operations from Tape Insertion though Operation Start

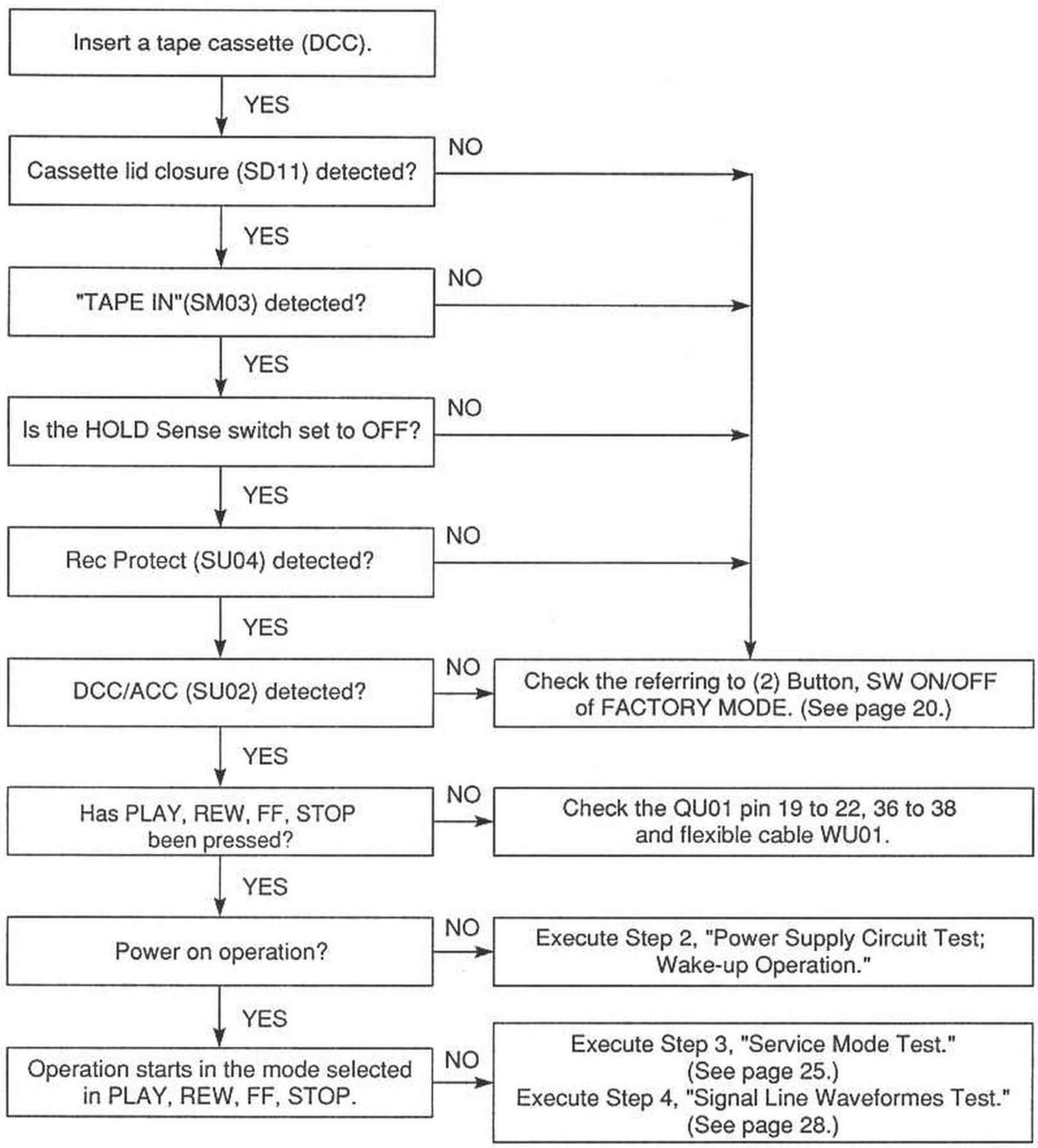

Step 2. Power Supply Circuit Test; Wake-Up Operation

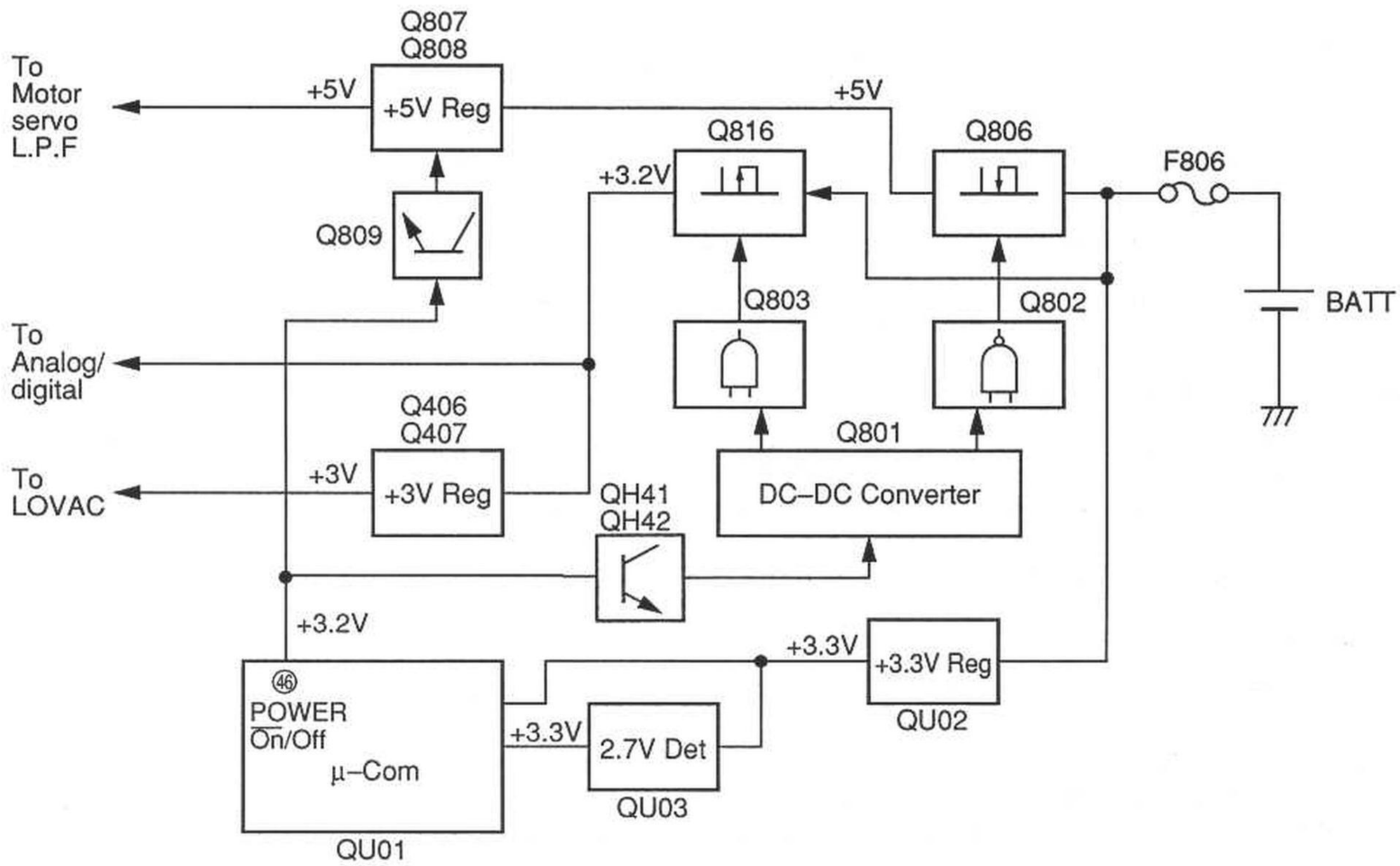

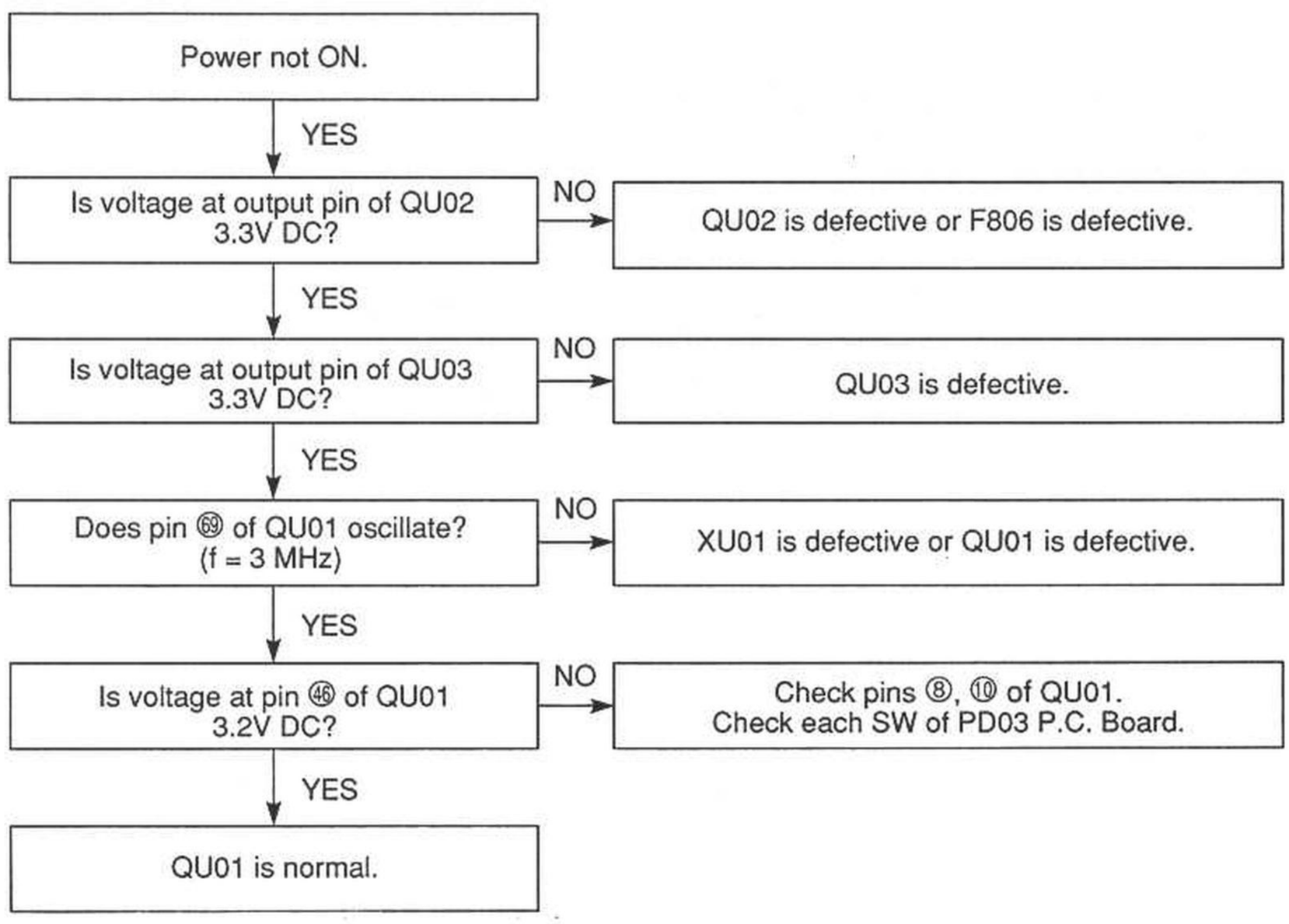

Step 3. CPU ←→ IC's Communication (Bus Line) test [Self Diagnostic (Factory/Service Mode)]

In Service mode, the CPU checks for circuit integrity and displays the test results on the LCD. Use this mode for quick fault isolation.

How To Enter Service Mode

1. Set to "Factory mode".
2. With the LCD shown "FACTORY 024D", press the "TEXT" button, and "SERVICE MODE" will appear on the LCD.

LCD → □SERVICE□MODE□

Note: Pressing the "TEXT" button again, returns the mode to the FACTORY MODE.

COUNTER button operation count	Test item	LCD message	Remarks
1	(LCD) test	(All LCD's light up.)	
2	L3 BUS communication test	L3 BUS OK or L3 BUS NG	See communication Test on pages 25~27.
3	DRP communication test	DRP OK or DRP NG	
4	SFC communication test	SFC OK or SFC NG	
5	DAIO communication test	DAIO OK or DAIO NG	
6	Total error rate	Displays number of errors generated in 32 segments (for 1.3 sec.) in hexa decimal.	See Digital Error Rate Display.

• **Digital Error Rate Display**

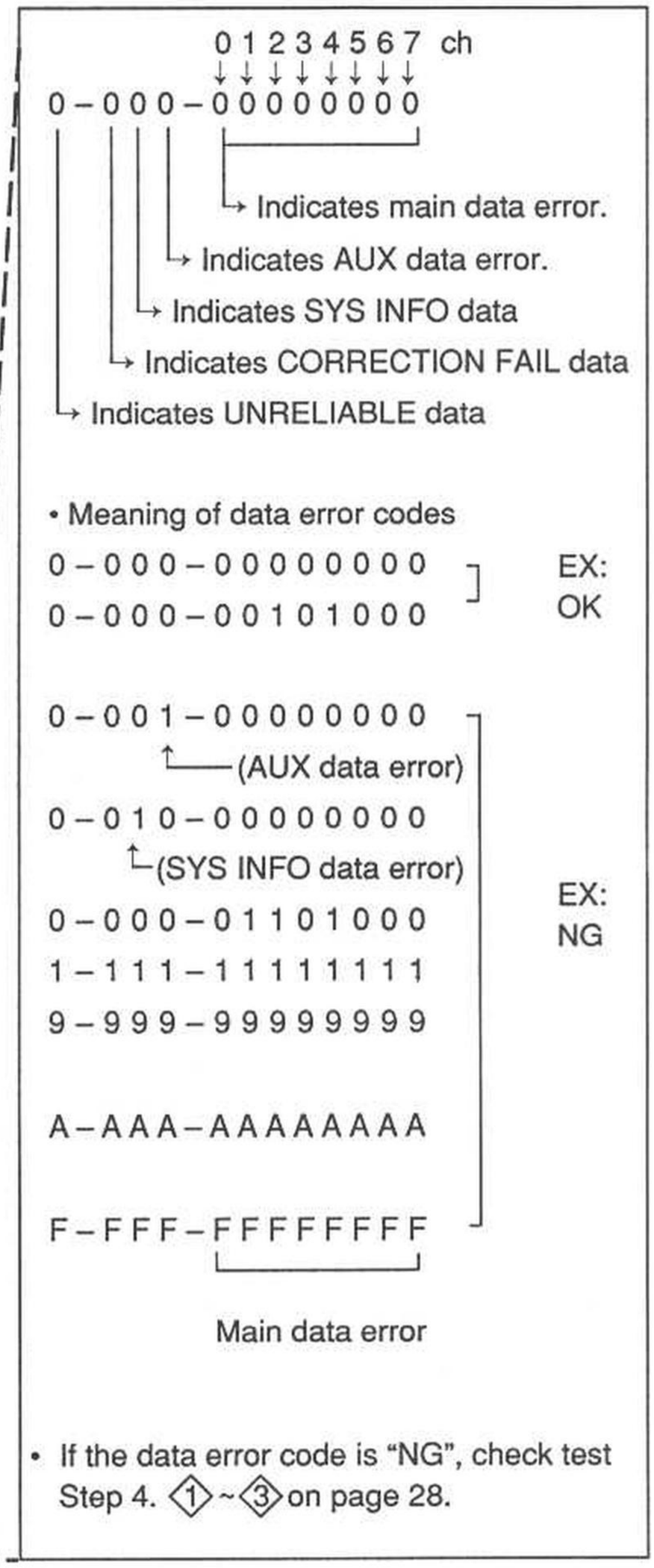

● LSI, DRP SFC and DAIO Communication Test

The CPU is connected to its peripheral ICs (DRP, SFC and DAIO) via a parallel bus consisting of clock, data, and control lines. If an "NG" message is displayed on the LCD as a result of self diagnostics in Service mode, it is necessary to determines which IC out of DRP, SFC and DAIO (including their peripheral components) is defective. The flowcharts on the following pages provide a quick troubleshooting guide to locate the defective IC(s).

(1) Locating the defective division of LSI communication test (Clock Line: "L3BUS NG")

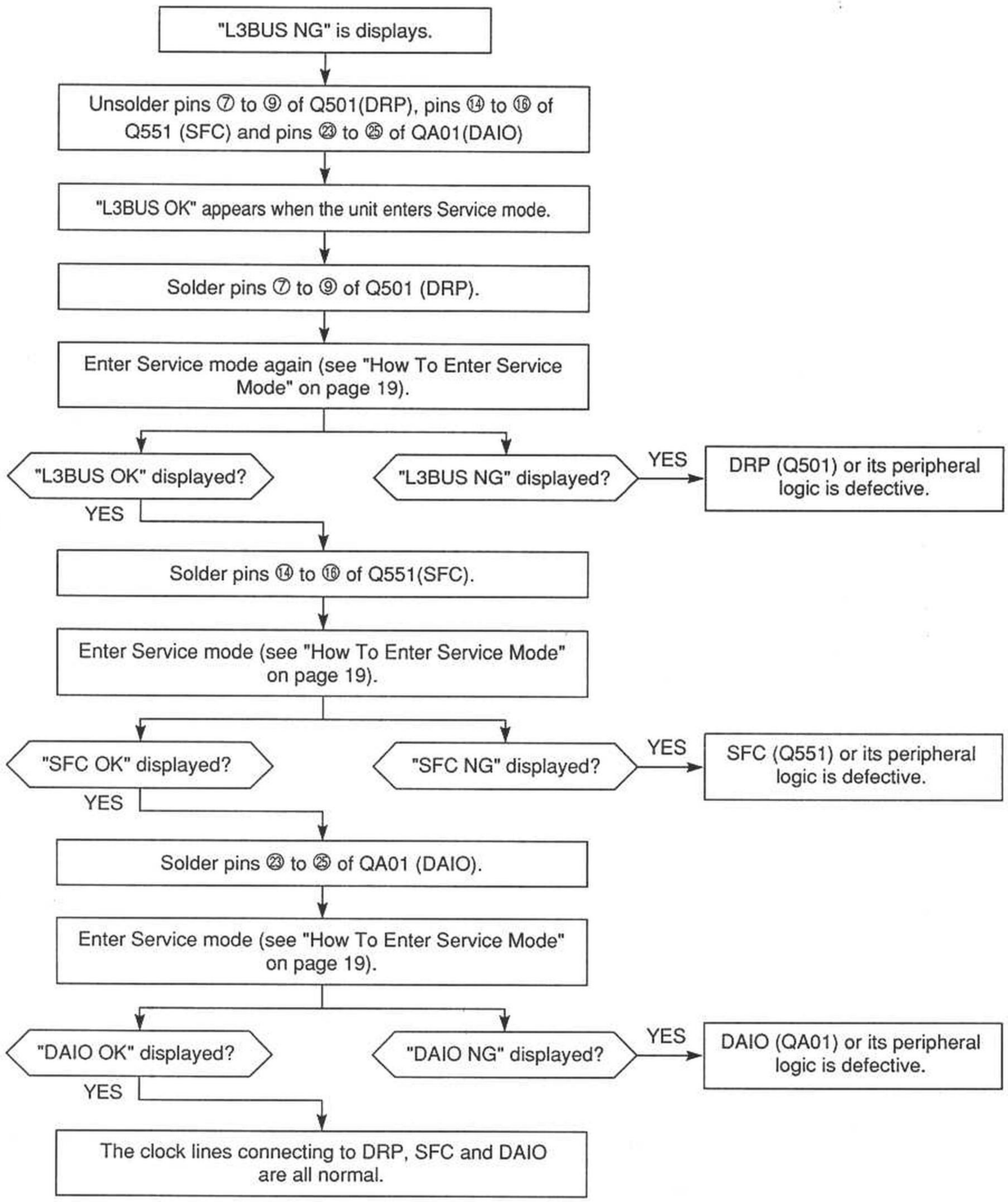

(2) Locating the defective division of DRP, SFC and DAIO communication (Data and Control Line: "DRP/SFC/ DAIO NG")

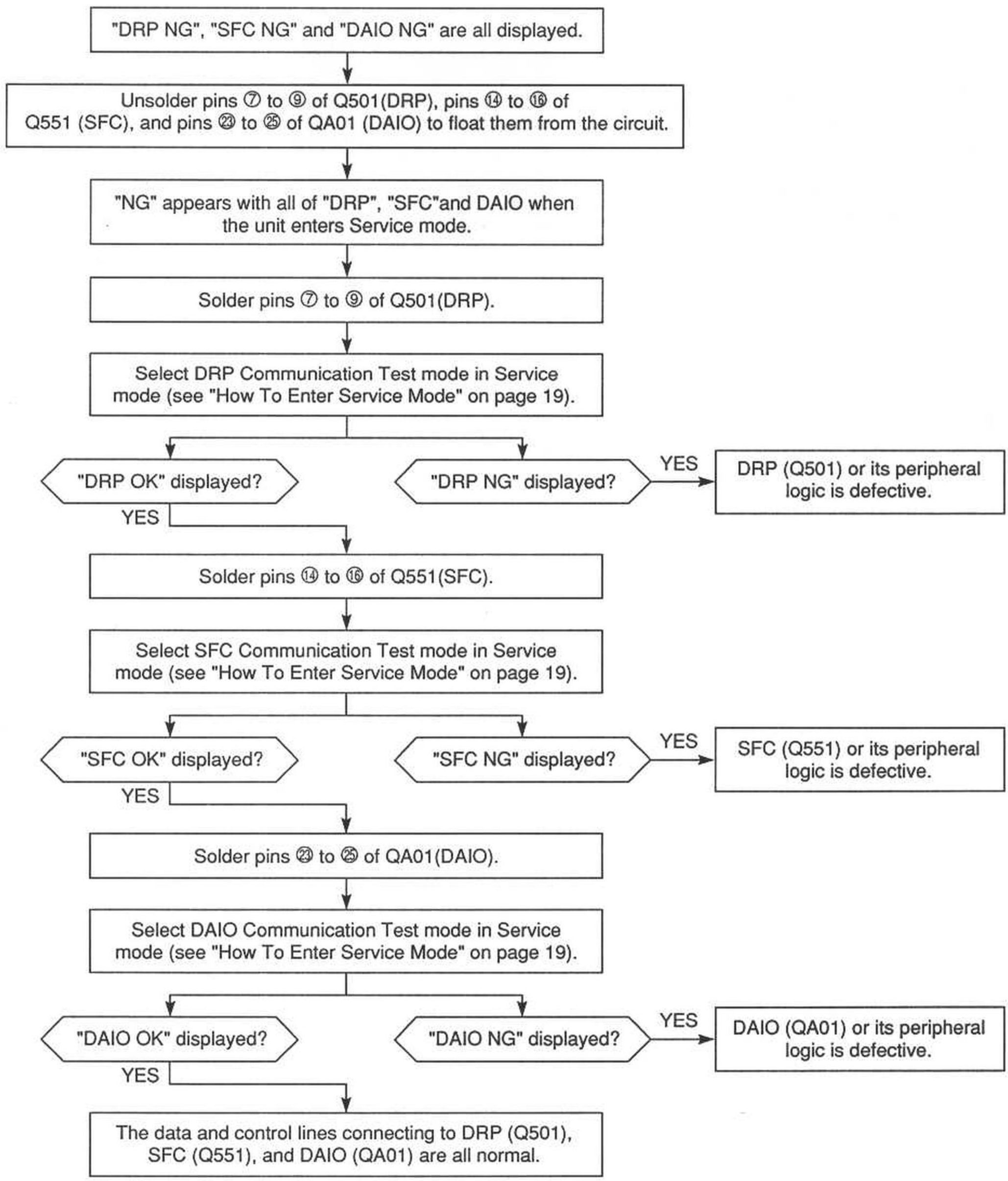

Notes:

- If an IC or its peripheral component is found to be defective, leave its pin(s) unsoldered or replace if with a functioning component.
- If a defective IC or peripheral is left soldered, an "NG" message will reappear when another IC is tested.
- ICs or peripherals found to be normal may be resoldered.
- More than one IC or peripheral may be defective at a time. Carry out all the troubleshooting steps even if a defective IC or component is discovered before you complete all the steps.
- The unit turns off if no button is operated for 3 minutes after entering Service mode.
- Use a normal (new) tape for troubleshooting.
- To exit Service mode, press the STOP button.

Step 4. Signal Line Waveforms Test (See Block Diagram ◇No.◇)

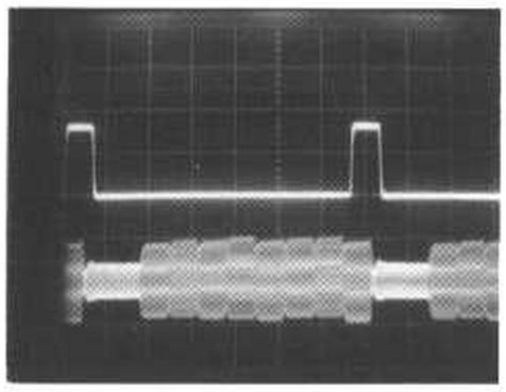

3 RDSYNC (CH1)

1 RDMUX (CH2)

CH1 Y: 0.2V x 10
X: 0.5μs
CH2 Y: 50mV x 10
X: 0.5μs

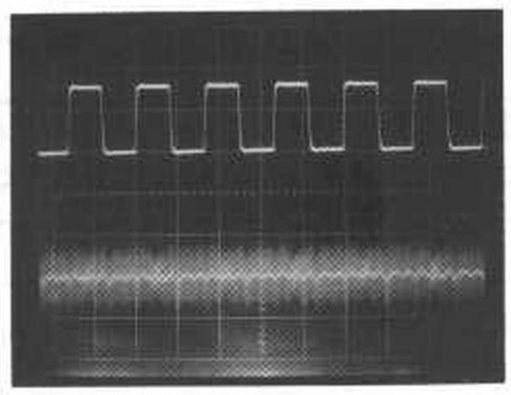

2 RDCLK (CH1)

1 RDMUX (CH2)

CH1 Y: 0.2V x 10
X: 0.2μs
CH2 Y: 50mV x 10
X: 0.2μs

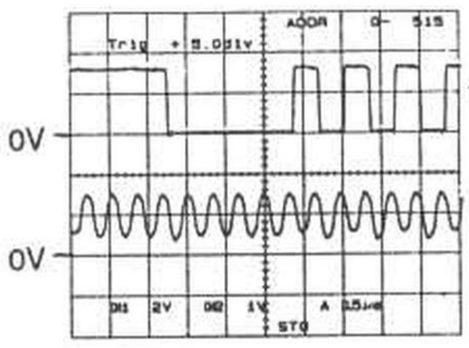

0V

0V

4 AMP O (CH1)

5 WDATA (CH2)

CH1 Y: 2V
X: 0.5μs

CH2 Y: 1V
X: 0.5μs

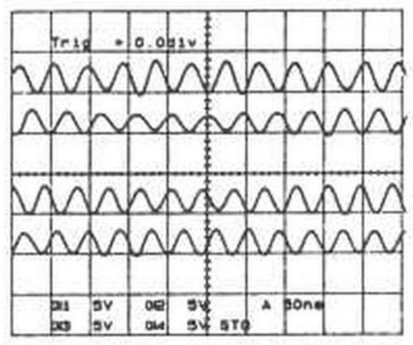

15 X22OUT

16 X22IN

17 X24OUT

18 X24IN

Y: 5V
X: 50ns

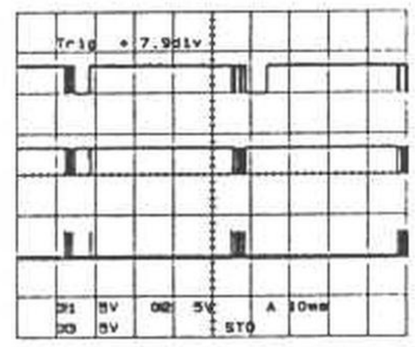

35 L3MODE

33 L3CLK

34 L3DATA

Y: 5V
X: 10ms

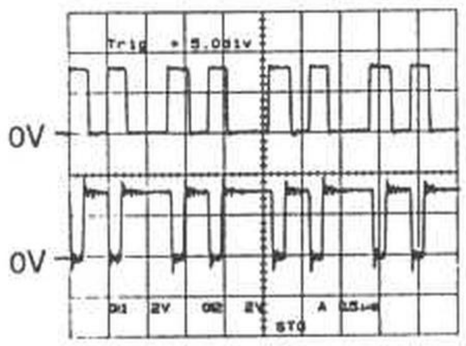

0V

0V

6 WEN

7 OEN

Y: 2V
X: 0.5μs

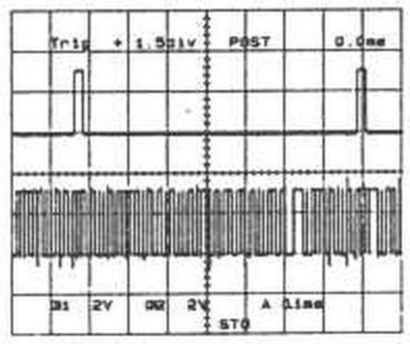

20 FSYNC

19 FDAI

Y: 2V
X: 0.1ms

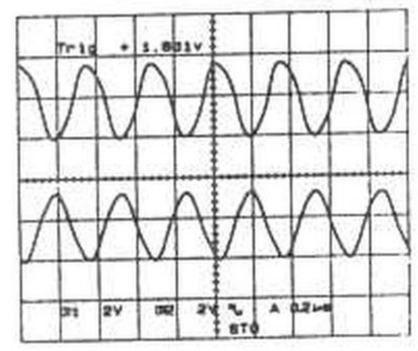

36 X2

37 X1

Y: 2V
X: 0.2μs

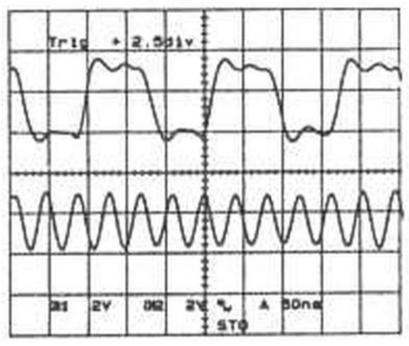

8 MCLK

9 CLK24

Y: 2V
X: 50ns

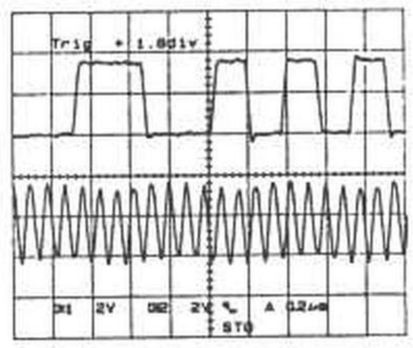

29 OPTOUT

24 FS256

Y: 2V
X: 0.2μs

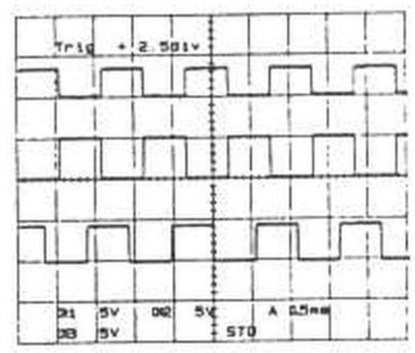

38 F-REF

39 F-REF

40 FGIN/FG

Y: 5V
X: 0.5ms

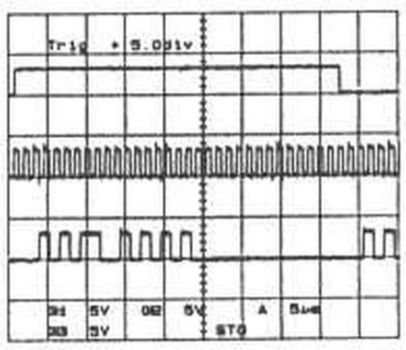

11 SBWS

12 SBCL

13 SBDA

Y: 5V
X: 5μs

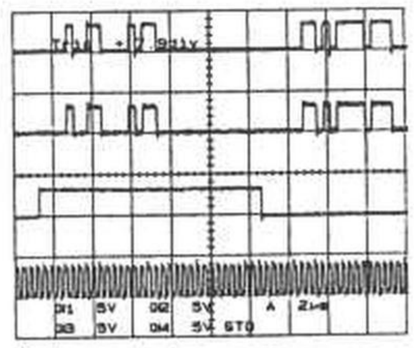

27 SDA2

28 SDA1

25 SWS

26 SCL

Y: 5V
X: 2μs

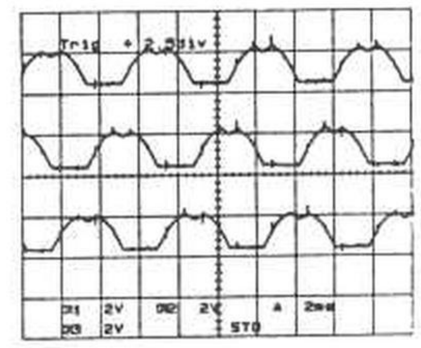

41 W

42 V

43 U

Y: 2V
X: 2ms

BLOCK DIAGRAM

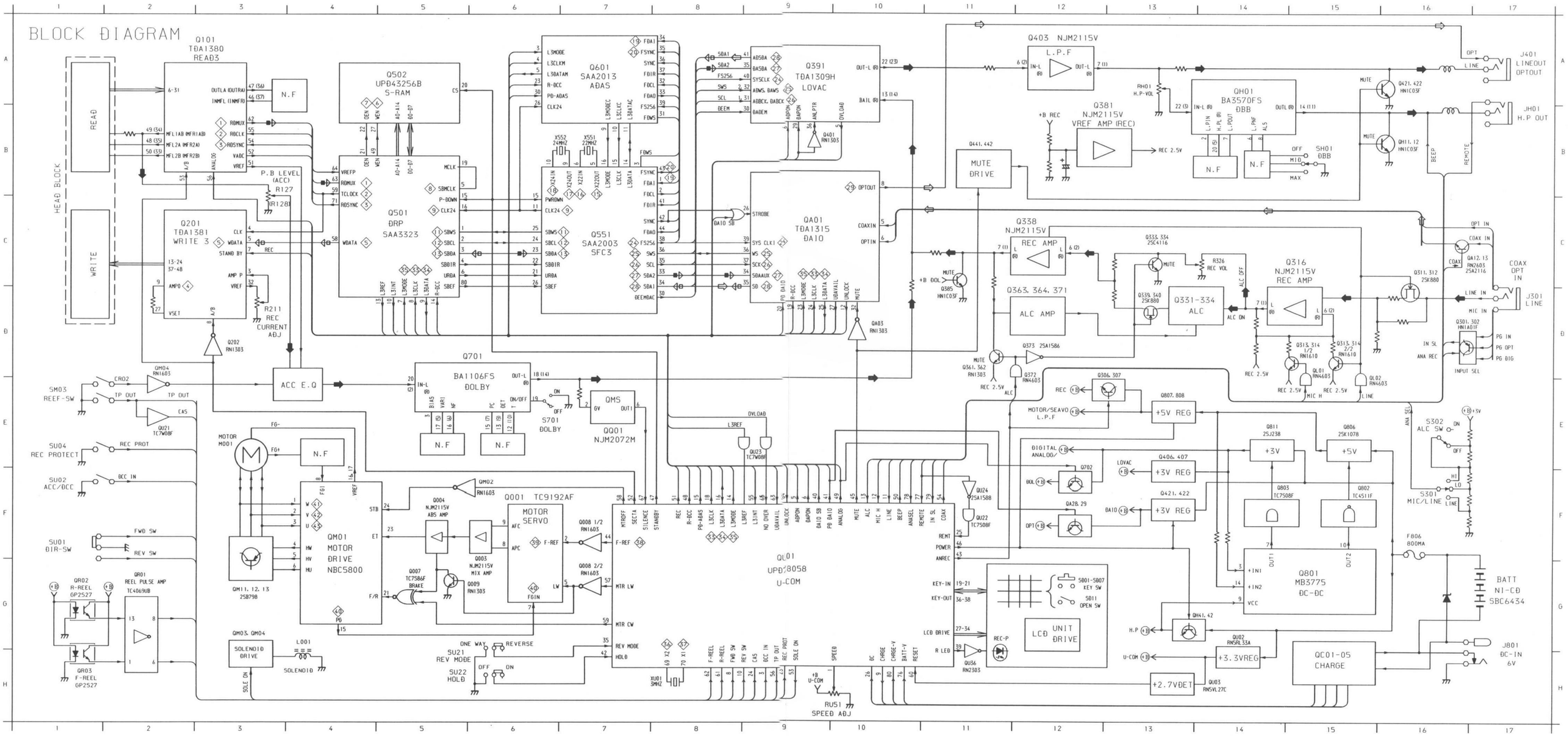

Signal line

- □▷ : DCC REC(WRITE)
- ■▷ : DCC PLAY(READ)
- ⇨ : Digital Audio
- ➡ : Analog Audio(ACC PLAY)

PRINTED CIRCUIT BOARDS DIAGRAM

MAIN P.C. BOARD (P503)

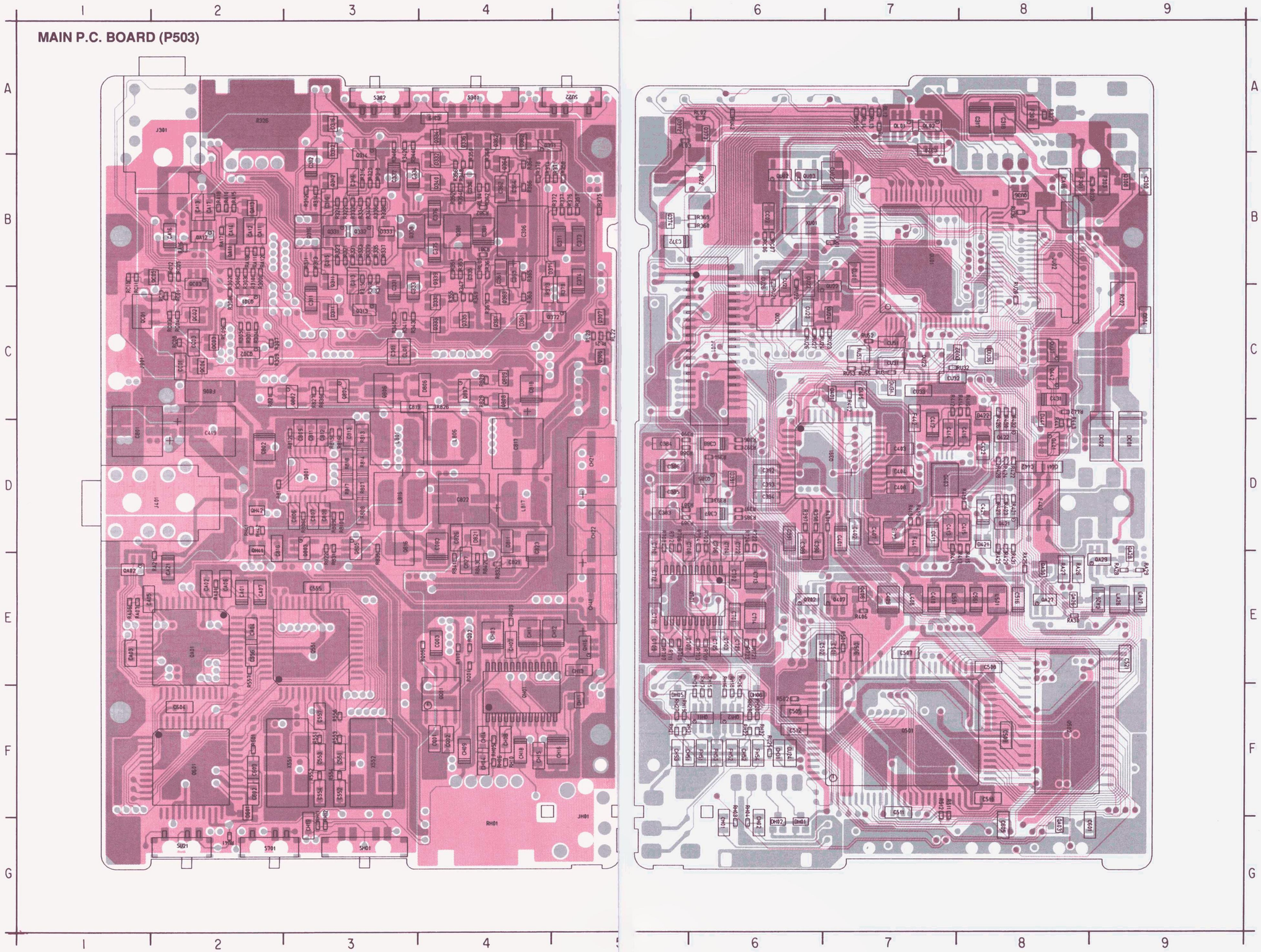

C301	C3	C721	E6	DH01	G6	QA26	E8	R376	B5	RA15	B2
C302	B9	C801	D1	DH02	G6	QA27	E8	R377	B5	RA16	B2
C306	B4	C802	D2	DH05	F5	QA28	E9	R378	B4	RA17	B2
C311	C3	C803	D4	DH06	F6	QA29	E9	R379	C5	RA18	B2
C312	B3	C804	C9	DH11	F5	QA30	E8	R381	B4	RA21	E2
C313	B3	C806	D3	DU31	C7	QC01	C1	R382	B4	RA25	E8
C314	B3	C807	D3	DU32	C8	QC02	C2	R385	D6	RA26	E8
C315	B3	C808	D3	DU36	C8	QC03	B2	R386	D6	RA27	E8
C316	B3	C809	D3			QC04	C2	R387	D5	RA28	E9
C317	A8	C811	D3			QC05	B2	R388	D5	RA29	E9
C318	A8	C812	D3	F301	B8	QH01	F4	R389	D5	RA30	E8
C319	A4	C816	D2	F302	A8	QH11	F6	R390	D5	RC01	C2
C320	A7	C817	D4	F303	B9	QH12	F6	R391	D6	RC02	C9
C331	C3	C818	C4	F441	D7	QH16	E5	R392	D6	RC03	C2
C332	B3	C819	C3	F442	C7	QH41	E2	R393	D6	RC04	C2
C333	C3	C821	E4	F443	D8	QH42	D2	R394	D6	RC05	B2
C334	B3	C822	D4	FH51	F6	QL01	A7	R397	D6	RC06	B6
C335	B4	C823	D4	FH52	F6	QL02	A7	R398	D6	RC07	B6
C336	B4	C826	D4	FH53	F6	QQ01	F4	R401	D7	RC08	C2
C361	B4	C827	E4	FH54	F6	QU01	B7	R402	C7	RC09	C2
C362	B4	CA01	E2			QU02	B6	R406	E7	RC10	B1
C363	B4	CA02	E2			QU03	B6	R411	D7	RC11	B1
C364	B4	CA03	E1	J302	A2	QU21	C6	R412	C7	RC12	B2
C371	B5	CA04	E2	J401	D1	QU22	B7	R413	D8	RC13	C2
C372	B5	CA05	E1	J801	C1	QU23	C7	R414	C8	RH03	G6
C373	B5	CA06	E2	J802	B6	QU24	C7	R415	D8	RH04	G6
C374	B5	CA07	E2	JU01	C6	QU36	B8	R416	C8	RH05	F4
C376	B4	CA11	B2	JU02	B8	QU37	C8	R417	D7	RH06	F4
C381	B4	CA12	B2					R418	D7	RH09	E4
C383	D5	CA13	B2					R419	D8	RH10	F4
C384	D5	CA14	B2	L406	E7	R300	B2	R421	D8	RH11	G3
C385	D5	CA16	B2	L501	E8	R301	C2	R422	D8	RH12	G3
C386	D5	CA17	B2	L551	E8	R302	B2	R423	D8	RH15	F6
C387	D6	CA18	B8	L800	D4	R303	B2	R424	D8	RH16	F6
C388	D6	CA21	E2	L801	D3	R304	C2	R425	D8	RH17	F6
C389	D6	CA26	E9	L816	D3	R305	C2	R426	C8	RH18	F6
C390	D6	CA27	E9	L817	D4	R306	B2	R427	D8	RH19	F5
C391	D6	CC01	C2	LA26	E9	R307	C2	R428	D8	RH20	F6
C392	D6	CC02	B6			R308	C2	R429	D8	RH21	F5
C393	D6	CC03	C2			R309	C2	R430	C8	RH22	F6
C394	D6	CH01	G6	Q301	C2	R310	B2	R431	D8	RH25	F6
C401	D7	CH02	G6	Q302	C2	R311	B3	R432	C8	RH26	F6
C402	D7	CH03	E4	Q306	C5	R312	B3	R441	D8	RH27	F5
C403	D7	CH04	F4	Q307	C5	R313	B3	R442	C8	RH28	F6
C404	D7	CH07	E4	Q308	B9	R314	B3	R443	D8	RH31	F5
C405	C7	CH08	F4	Q311	B3	R315	B3	R501	E7	RH32	F6
C407	D7	CH09	F4	Q312	B3	R316	B3	R502	F6	RH41	D2
C408	D7	CH11	E4	Q313	C3	R317	B3	R511	G7	RH42	D2
C409	E7	CH12	E5	Q314	B3	R318	B3	R512	G7	RL02	A6
C410	E7	CH13	F5	Q316	B3	R319	B3	R551	F3	RL03	A5
C411	D7	CH14	F4	Q331	B3	R320	B3	R552	F3	RL04	B4
C412	D7	CH15	F4	Q332	B3	R321	B3	R553	F3	RL05	B4
C413	D7	CH16	F5	Q333	C4	R322	B3	R554	F3	RL11	A7
C414	D7	CH18	F4	Q334	A4	R323	B3	R556	F3	RL12	A7
C415	D8	CH19	G3	Q335	C4	R324	B3	R557	E2	RL13	A7
C416	D8	CH21	D5	Q336	A4	R326	A2	R601	F2	RL14	A7
C418	D7	CH22	D5	Q338	B3	R327	A8	R701	E6	RL15	A7
C419	D2	CH31	F6	Q339	B4	R328	B9	R703	E6	RL21	C5
C421	D8	CH41	E5	Q340	B4	R331	B3	R705	E5	RL22	C5
C422	D8	CH51	F5	Q361	C4	R332	B3	R706	D5	RL23	C5
C431	C8	CH52	F6	Q362	A4	R333	B3	R707	E5	RQ01	E4
C441	D8	CH53	F5	Q363	C4	R335	B3	R708	D5	RQ02	E4
C442	D8	CL01	C3	Q364	B4	R336	B3	R711	E5	RQ06	E4
C501	E7	CQ01	F4	Q371	A4	R337	B3	R712	D5	RU01	B7
C502	E7	CQ02	F4	Q372	C5	R338	B3	R717	E4	RU21	B6
C505	F6	CQ03	E4	Q373	A6	R339	B3	R721	E6	RU22	B6
C506	E7	CU01	B7	Q374	B5	R340	B3	R723	E6	RU23	C7
C507	E7	CU02	B7	Q381	B4	R341	C3	R806	D3	RU24	C6
C508	E8	CU21	B6	Q385	D6	R342	A3	R807	D3	RU25	F6
C509	F8	CU22	B6	Q391	D7	R343	C3	R808	D3	RU26	C6
C510	F8	CU23	C6	Q401	C7	R344	A3	R809	D3	RU27	C6
C511	G7	CU24	F6	Q403	D7	R345	C3	R810	D3	RU28	C8
C512	F6	CU26	B6	Q406	E7	R346	A3	R811	D2	RU31	C7
C516	E8	CU31	C7	Q407	E7	R347	C4	R812	D3	RU32	C7
C521	E9	CU32	C7	Q421	D8	R348	B4	R813	D3	RU36	B8
C551	F3	CU33	C7	Q422	D8	R349	C4	R814	D3	RU41	G2
C552	F3	CU51	C7	Q441	D8	R350	B4	R815	D3	RU42	A6
C553	F3			Q442	C8	R351	B4	R816	D3	RU51	C7
C554	F3			Q501	F7	R352	B4	R817	D3	RU52	C7
C555	E3	D311	C3	Q502	F8	R353	B4	R818	D3	RU53	C7
C556	E2	D312	A3	Q551	E3	R354	B4	R821	C2		
C557	F3	D316	A3	Q601	F2	R355	C4	R822	E3		
C561	E8	D331	C4	Q701	E6	R356	B4	R826	C4	S301	A4
C601	G9	D332	B4	Q702	E6	R357	B5	R827	C3	S302	A3
C602	F2	D333	B3	Q801	D3	R358	B5	R828	C4	S701	G2
C603	F2	D361	C4	Q802	C3	R360	B6	R829	C4	SH01	G3
C604	F2	D362	A4	Q803	D3	R361	B4	R831	E3	SU21	G2
C605	G8	D371	B5	Q804	C3	R362	B4	R832	E4	SU22	A5
C701	E6	D372	A5	Q805	D3	R363	C4	R835	E3		
C702	E6	D391	D6	Q806	C3	R364	B4	R836	C3		
C703	E6	D421	D8	Q807	C4	R365	B4	R841	E4	X551	F3
C705	E6	D422	C8	Q808	C4	R366	B4	R842	E4	X552	F3
C707	E6	D441	D8	Q809	C4	R367	C4	R843	E4	XU01	B6
C708	D5	D601	F2	Q816	E3	R368	B4	RA01	E2		
C709	E5	D806	C4	QA01	E2	R369	B6	RA06	E1		
C710	D5	D811	D4	QA02	E1	R371	B5	RA07	E1		
C711	E5	D821	D4	QA03	G8	R372	B5	RA10	B2		
C712	E5	DC01	D9	QA11	B2	R373	C4	RA11	B2		
C713	E6	DC02	D9	QA12	B2	R374	B4	RA12	B2		
C714	E6	DC03	C2	QA13	B2	R375	B5	RA13	B2		

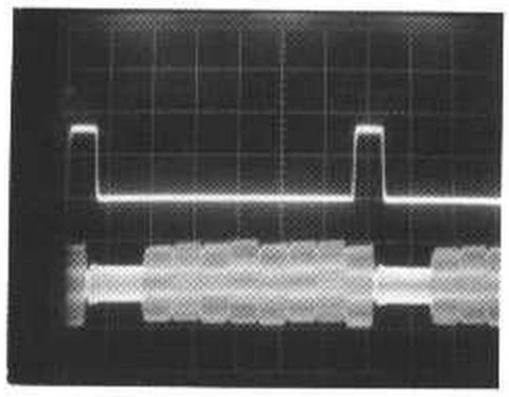

3 RDSYNC (CH1)

1 RDMUX (CH2)

CH1 Y: 0.2V x 10
X: 0.5μs
CH2 Y: 50mV x 10
X: 0.5μs

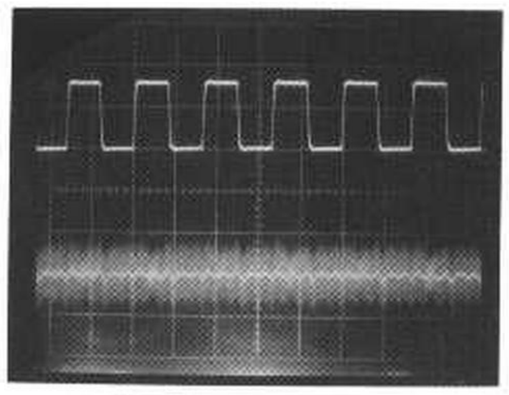

2 RDCLK (CH1)

1 RDMUX (CH2)

CH1 Y: 0.2V x 10
X: 0.5μs
CH2 Y: 50mV x 10
X: 0.5μs

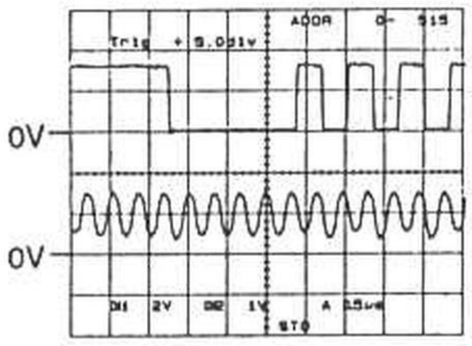

4 AMP O(CH1)

5 WDATA (CH2)

CH1 Y: 2V
X: 0.5μs

CH2 Y: 1V
X: 0.5μs

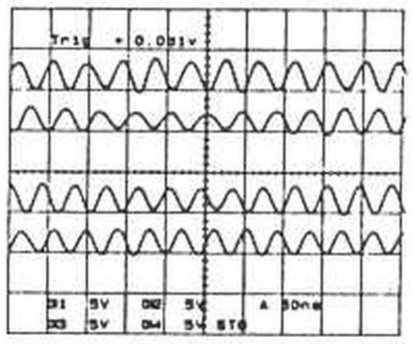

15 X22OUT

16 X22IN

17 X24OUT

18 X24IN

Y: 5V
X: 50ns

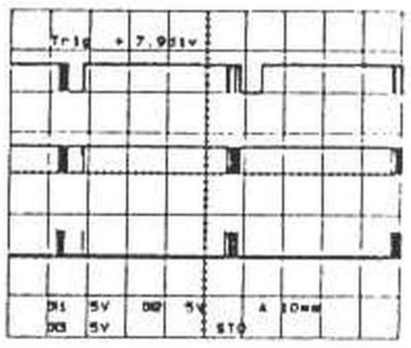

35 L3MODE

33 L3CLK

34 L3DATA

Y: 5V
X: 10ms

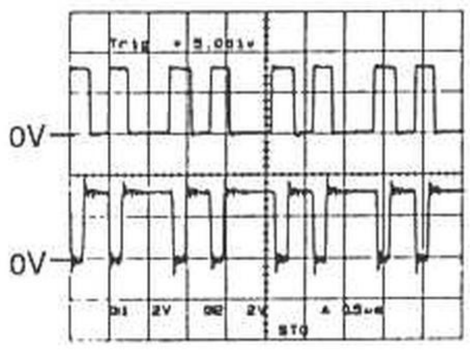

6 WEN

7 OEN

Y: 2V
X: 0.5μs

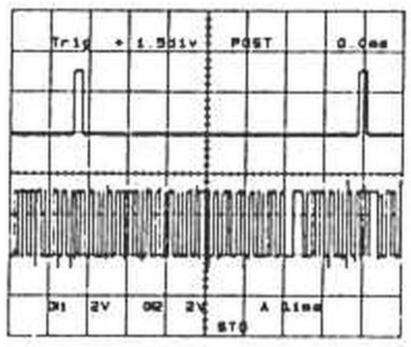

20 FSYNC

19 FDAI

Y: 2V
X: 0.1ms

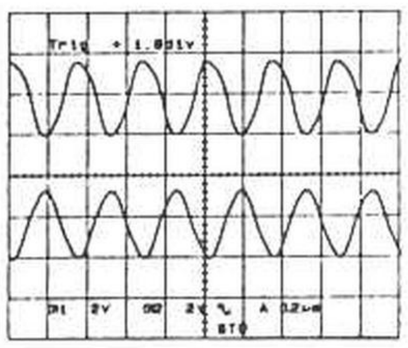

36 X2

37 X1

Y: 2V
X: 0.2μs

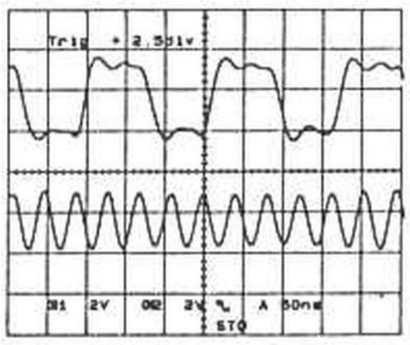

8 MCLK

9 CLK24

Y: 2V
X: 50ns

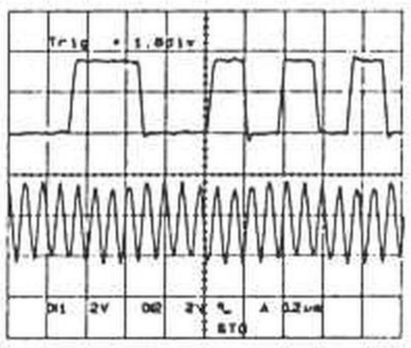

29 OPTOUT

24 FS256

Y: 2V
X: 0.2μs

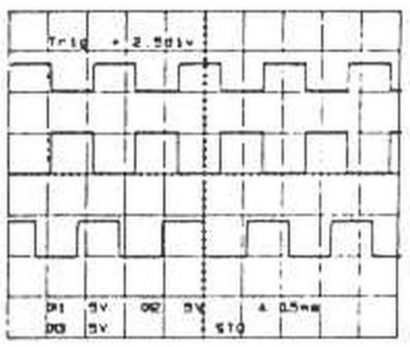

38 F-REF

39 F-REF

40 FGIN/FG

Y: 5V
X: 0.5ms

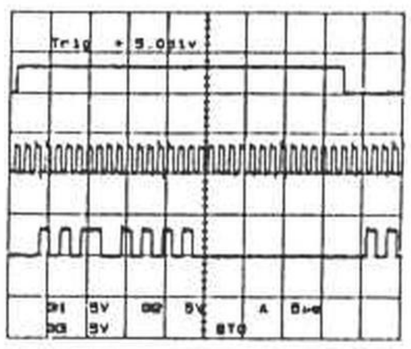

11 SBWS

12 SBCL

13 SBDA

Y: 5V
X: 5μs

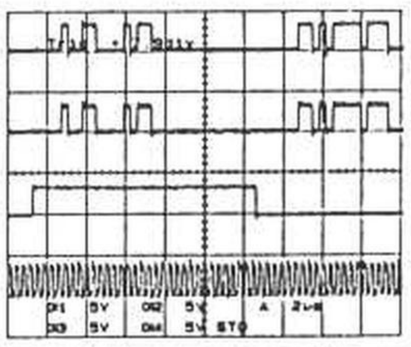

27 SDA2

28 SDA1

25 XL

26 SWS

Y: 5V
X: 2μs

Signal line

□▷ : DCC REC(WRITE)

■▷ : DCC PLAY(READ)

⇨ : Digital Audio

➡ : Analog Audio(ACC PLAY)

No mark : STOP

▭ : ACC PLAY

( ) : DCC PLAY

(( )) : DCC REC

SCHEMATIC DIAGRAM

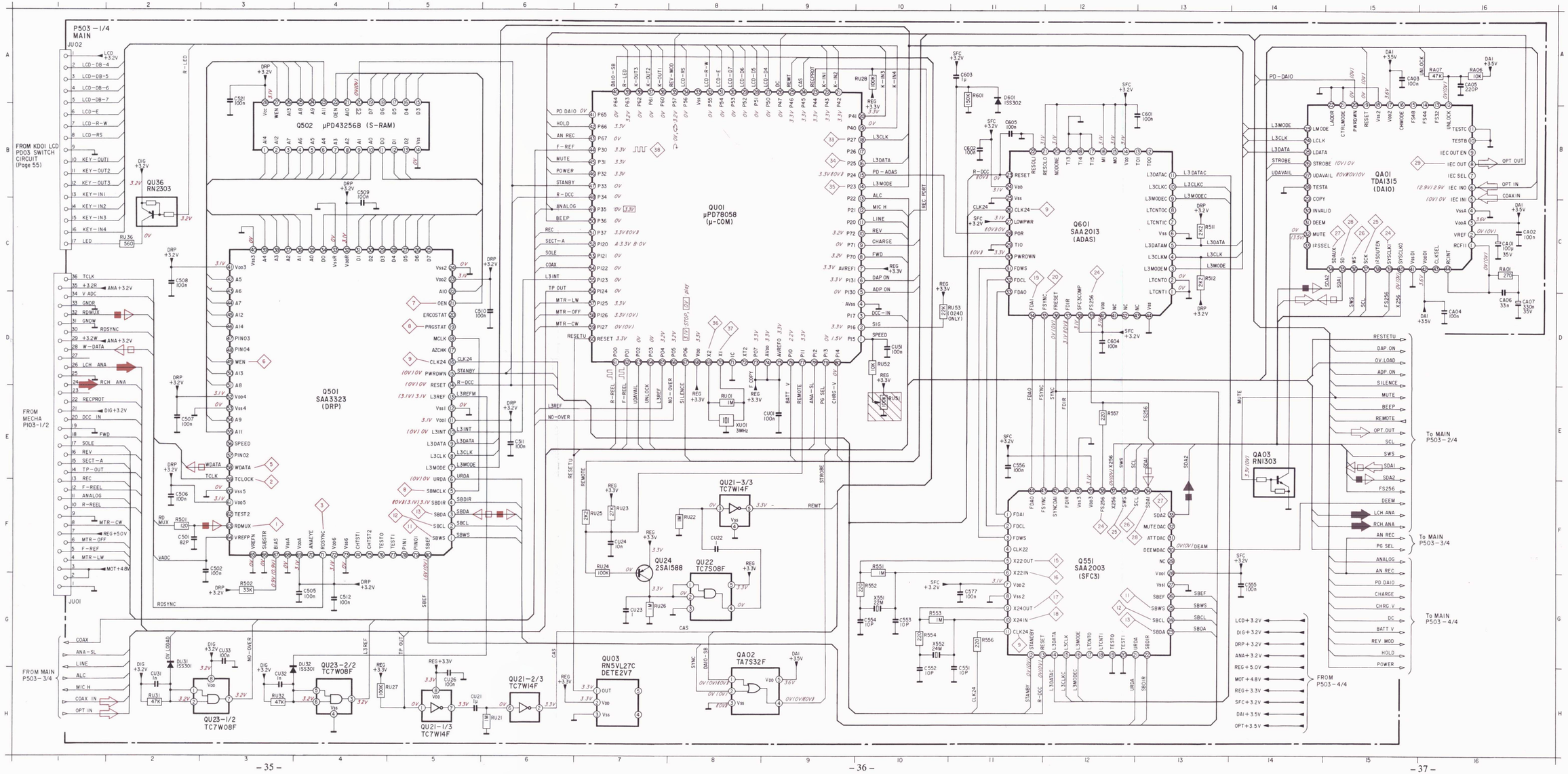

C501	F2	Q502	B4
C502	F3	Q551	F12
C505	G4	Q601	C12
C506	F2	QA01	B15
C507	E2	QA02	H8
C508	C2	QA03	E14
C509	C4	QU03	H7
C510	D6	QU08	C8
C511	E6	QU21	F8
C512	G4	QU21	H5
C521	A3	QU21	H6
C551	G11	QU22	G8
C552	G10	QU23	H3
C553	G10	QU23	H4
C554	G10	QU24	F7
C555	G14	QU36	C2
C556	E11		
C577	G11		
C601	B13	R501	F2
C602	B11	R502	G3
C603	A11	R511	C13
C604	D12	R512	C13
C605	B11	R551	F10
CA01	C16	R552	G10
CA02	C16	R553	G10
CA03	A15	R554	G10
CA04	D16	R556	G11
CA05	A16	R557	E12
CA06	C16	R601	A11
CA07	D16	RA01	C16
CU01	E9	RA06	A16
CU21	H5	RA07	A16
CU22	F8	RU01	E8
CU23	G7	RU18	A10
CU24	F7	RU21	H6
CU26	H5	RU22	F8
CU31	H2	RU23	F7
CU32	H3	RU24	F7
CU33	G3	RU25	F7
CU51	D10	RU26	G7
		RU27	H4
		RU31	H2
D601	A11	RU32	H3
DU31	H2	RU36	C2
DU31	H2	RU51	E10
		RU52	D10
		RU53	D10
JU01-1	G1	RU54	D10
JU01-10	F1		
JU01-11	F1		
JU01-12	F1	X551	G10
JU01-13	F1	X552	G10
JU01-14	E1	XU01	E8
JU01-15	E1		
JU01-16	E1		
JU01-17	E1		
JU01-18	E1		
JU01-19	E1		
JU01-2	G1		
JU01-20	E1		
JU01-21	E1		
JU01-22	E1		
JU01-23	E1		
JU01-24	D1		
JU01-25	D1		
JU01-26	D1		
JU01-27	D1		
JU01-28	D1		
JU01-29	D1		
JU01-3	F1		
JU01-30	D1		
JU01-31	D1		
JU01-32	D1		
JU01-33	D1		
JU01-34	D1		
JU01-35	C1		
JU01-36	C1		
JU01-4	F1		
JU01-5	F1		
JU01-6	F1		
JU01-7	F1		
JU01-8	F1		
JU01-9	F1		
JU02-1	A1		
JU02-10	B1		
JU02-11	B1		
JU02-12	B1		
JU02-13	B1		
JU02-14	C1		
JU02-15	C1		
JU02-16	C1		
JU02-17	C1		
JU02-2	A1		
JU02-3	A1		
JU02-4	A1		
JU02-5	A1		
JU02-6	B1		
JU02-7	B1		
JU02-8	B1		
JU02-9	B1		
Q501	E4		

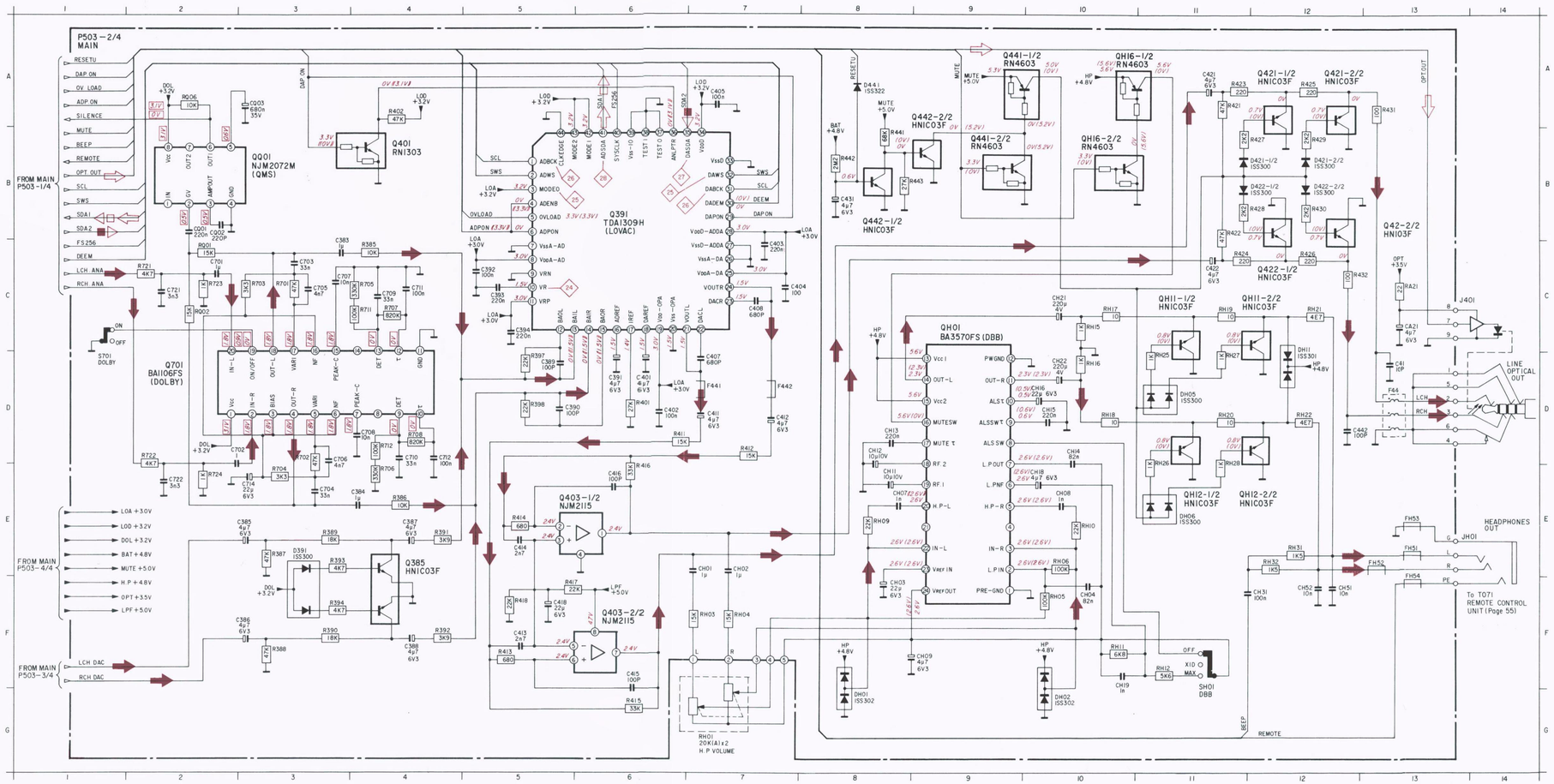

Signal line
- □▷ : DCC REC(WRITE)
- ■▷ : DCC PLAY(READ)
- ⇨ : Digital Audio
- ➡ : Analog Audio(ACC PLAY)

No mark : STOP
▭ : ACC PLAY
( ) : DCC PLAY
(( )) : DCC REC

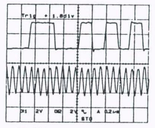

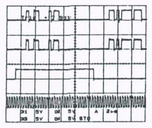

29 OPTOUT
24 FS256
27 SDA2
28 SDA1
25 XL
26 SWS

C383	C3	JH01-R	E13	RQ02	C2
C384	E4			RQ06	A2
C385	E3				
C386	F3	Q385	E4		
C387	E4	Q391	B6	S701	C1
C388	F4	Q401	B4	SH01	F11
C389	D5	Q403-1/2	E6		
C390	D5	Q403-2/2	F6		
C391	D6	Q421-1/2	A12		
C392	C5	Q421-2/2	A12		
C393	C5	Q422-1/2	B12		
C394	C5	Q422-2/2	B12		
C401	D6	Q441-1/2	A9		
C402	D6	Q441-2/2	B9		
C403	C7	Q442-1/2	B8		
C404	C7	Q442-2/2	B9		
C405	A7	Q701	D3		
C407	D7	QH01	D9		
C408	C7	QH11-1/2	C11		
C411	D7	QH11-2/2	C12		
C412	D7	QH12-1/2	D11		
C413	F5	QH12-2/2	D12		
C414	E5	QH16-1/2	A10		
C415	F6	QH16-2/2	B10		
C416	E6	QQ01	B2		
C418	F5				
C421	A11				
C422	C11	R385	C4		
C441	D13	R386	E4		
C442	D12	R387	E3		
C701	C2	R388	F3		
C702	D2	R389	E3		
C703	C3	R390	F3		
C704	E3	R391	E4		
C705	C3	R392	F4		
C706	D3	R393	E3		
C707	C3	R394	F3		
C708	D4	R397	D5		
C709	C4	R398	D5		
C710	D4	R401	D6		
C711	C4	R402	A4		
C712	D4	R411	D6		
C714	E3	R412	D7		
C721	C2	R413	F5		
C722	E2	R414	E5		
CA21	C13	R415	G6		
CH01	E7	R416	E6		
CH02	E7	R417	F5		
CH03	F8	R418	F5		
CH04	F10	R421	A11		
CH07	E8	R422	B11		
CH08	E10	R423	A11		
CH09	F9	R424	C11		
CH11	E8	R425	A12		
CH12	D8	R426	C12		
CH13	D8	R427	B11		
CH14	D10	R428	B11		
CH15	D10	R429	B12		
CH16	D10	R430	B12		
CH18	E10	R431	A13		
CH19	F10	R432	C12		
CH21	C10	R441	B8		
CH22	D10	R442	B8		
CH31	F12	R443	B8		
CH51	F12	R701	C3		
CH52	F12	R702	D3		
CQ01	B2	R703	C3		
CQ02	B2	R704	E3		
CQ03	A3	R705	C4		
		R706	E4		
		R707	C4		
D391	E3	R708	D4		
D421	B11	R711	C4		
D421-2/2	B12	R712	D4		
D422-1/2	B11	R721	C2		
D422-2/2	B12	R722	D2		
DH01	G9	R723	C2		
DH02	G10	R724	E2		
DH05	D11	RA21	C13		
DH06	E11	RH01	G7		
		RH03	F7		
		RH04	F7		
F441	D7	RH05	F10		
F442	D7	RH06	E10		
F443	D13	RH09	E8		
FH51	E13	RH10	E10		
FH52	E13	RH11	F10		
FH53	E13	RH12	F11		
FH54	F13	RH15	C10		
		RH16	D10		
		RH17	C10		
J401-1	D13	RH18	D10		
J401-2	D13	RH19	C11		
J401-3	D13	RH20	D11		
J401-4	D13	RH21	C12		
J401-5	D13	RH22	D12		
J401-6	D13	RH25	D11		
J401-7	C13	RH26	E11		
J401-8	C13	RH27	D11		
J401-9	C13	RH28	E11		
JH01-G	E13	RH31	E12		
JH01-L	E13	RH32	E12		
JH01-PE	F13	RQ01	C2		

C301	C3	Q381-1/2	D5	RL13	F3
C302	D1	Q381-2/2	E5	RL14	F3
C311	D3	QA11	E2	RL15	F2
C312	B3	QA12	D3		
C313	C4	QA12-1/2	D2		
C314	B4	QA13	D3	S301	G2
C315	C6	QL01-1/2	D4	S302	G3
C316	B6	QL01-2/2	E4		
C317	C7	QL02-1/2	F4		
C318	A7	QL02-2/2	F4		
C319	D4				
C320	D4				
C331	C8	R300	C3		
C332	A8	R301	B2		
C333	B8	R302	B2		
C334	A8	R303	B2		
C335	C10	R304	B2		
C336	B10	R305	B2		
C361	E10	R306	B3		
C362	F11	R307	A2		
C363	E10	R308	B2		
C364	F10	R309	A3		
C371	F9	R310	A3		
C372	E8	R311	B4		
C373	E6	R312	A3		
C374	G8	R313	C4		
C375	E6	R314	A3		
C376	E6	R315	C4		
C381	F5	R316	B4		
CA11	D2	R317	C5		
CA12	D3	R318	B5		
CA13	E4	R319	C5		
CA14	E3	R320	B5		
CA16	E2	R321	C6		
CA17	E4	R322	B6		
CA18	F1	R323	C6		
CL01	G2	R324	B6		
		R326	D6		
		R327	D3		
D311	C4	R328	D3		
D312	B4	R331	C7		
D316	D5	R332	A7		
D331	C8	R333	C7		
D332	B8	R334	B7		
D333-1/2	E6	R335	E7		
D333-2/2	E6	R336	E7		
D361	E10	R337	E6		
D362	F10	R338	F6		
D371	F7	R339	C8		
D372	G7	R340	A8		
		R341	B8		
		R342	A8		
F301	C3	R343	B8		
F302	C2	R344	A8		
F303	D2	R345	C9		
		R346	B9		
		R347	C9		
J301-1	C1	R348	B9		
J301-2	D1	R349	C9		
J301-3	C1	R350	B9		
J301-4	D1	R351	C10		
J301-5	C1	R352	B10		
J301-6	D1	R353	C10		
J301-7	E1	R354	B10		
J301-8	F1	R355	C8		
J301-9	E1	R356	B8		
		R357	G8		
		R358	G8		
Q301-1/2	B3	R360	E9		
Q301-2/2	B2	R361	C11		
Q302-1/2	A3	R362	C11		
Q302-2/2	A2	R363	E10		
Q308	C2	R364	F10		
Q311	C4	R365	E10		
Q312	B4	R366	F10		
Q313-1/2	C5	R367	E10		
Q313-2/2	C5	R368	F10		
Q314-1/2	B5	R369	E9		
Q314-2/2	B5	R371	F9		
Q316-1/2	A6	R372	F9		
Q316-2/2	B6	R373	E8		
Q331-1/2	E7	R374	F8		
Q331-2/2	E7	R375	G7		
Q332-1/2	E6	R376	E6		
Q332-2/2	F6	R377	F7		
Q333	C8	R378	E9		
Q334	B8	R379	E8		
Q335	C9	R381	D5		
Q336	B9	R382	F5		
Q338-1/2	A10	RA10	D4		
Q338-2/2	C10	RA11	D2		
Q339	C8	RA12	D2		
Q340	A8	RA13	D1		
Q361	D10	RA15	E3		
Q362	D9	RA16	E2		
Q363	E10	RA17	E3		
Q364	F10	RA18	E4		
Q371-1/2	F9	RL02	F7		
Q371-2/2	G8	RL03	G7		
Q372-1/2	F6	RL04	D8		
Q372-2/2	G6	RL05	D8		
Q373	F6	RL11	F3		
Q374	E8	RL12	F3		

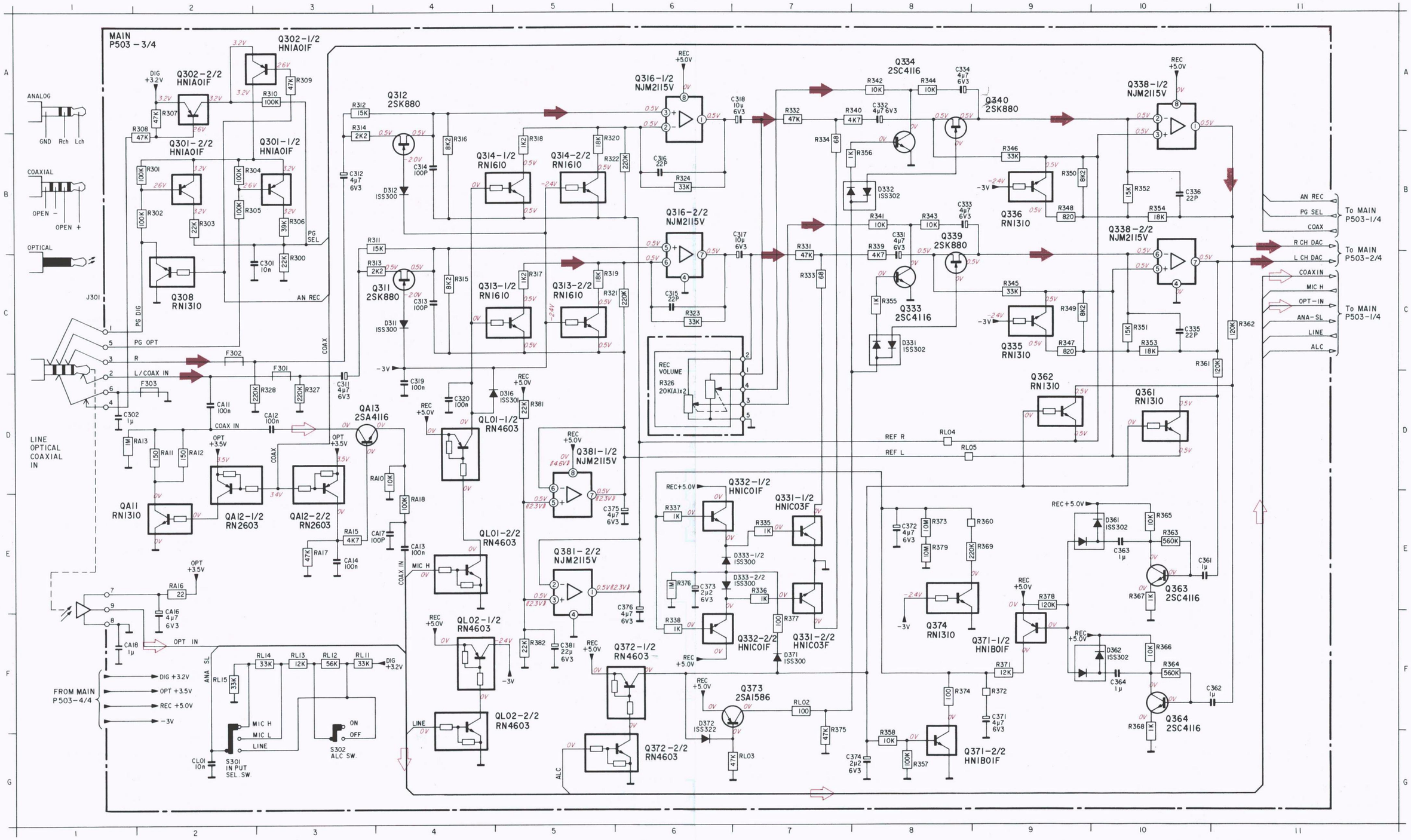

Signal line

- □▷ : DCC REC(WRITE)
- ■▷ : DCC PLAY(READ)
- ⇨ : Digital Audio
- ➡ : Analog Audio(ACC PLAY)

No mark : STOP

- ▭ : ACC PLAY
- ( ) : DCC PLAY
- (( )) : DCC REC

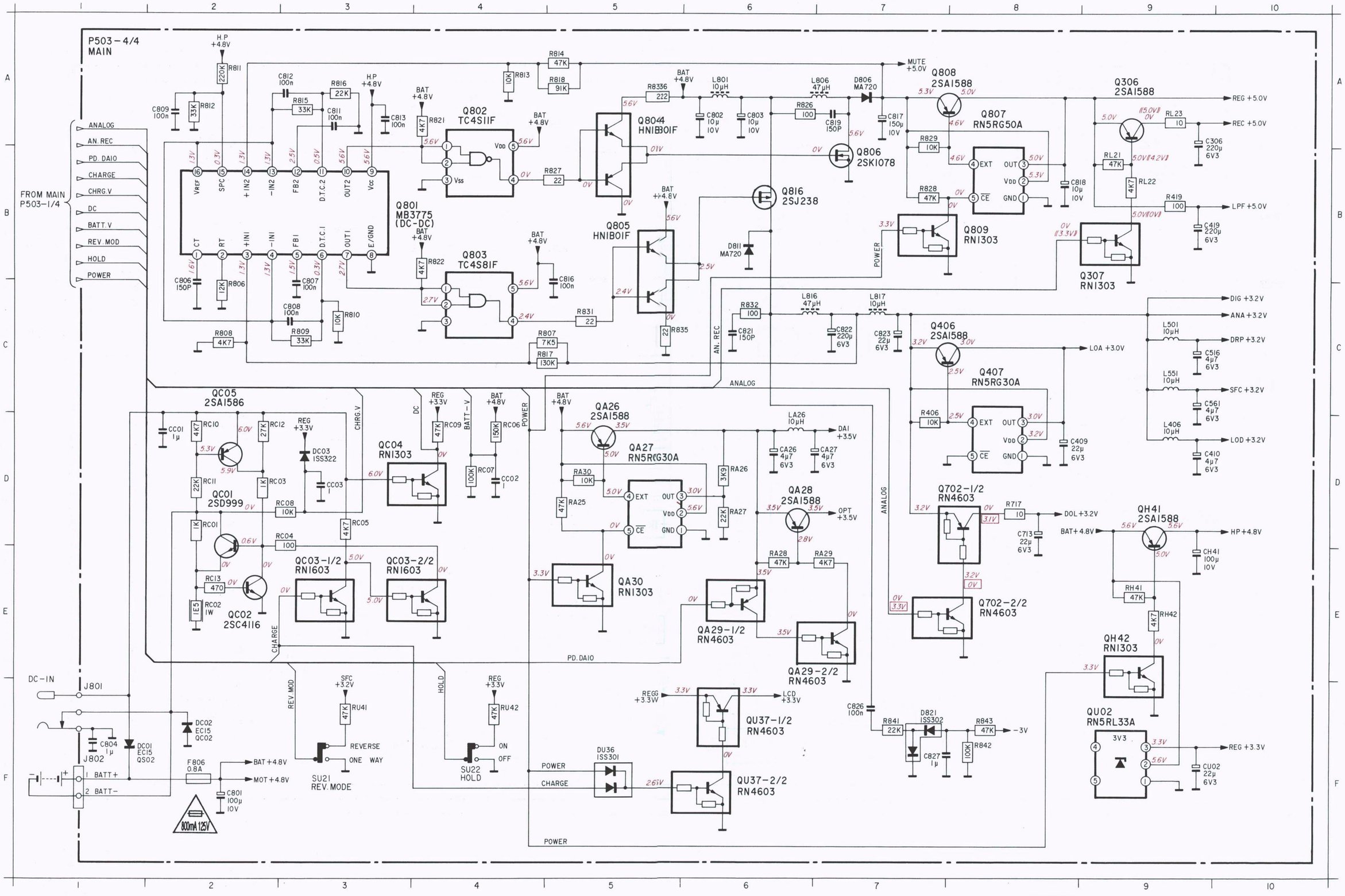

CAUTION :
FOR CONTINUED PROTECTION AGAINST RISK OF FIRE,
REPLACE ONLY WITH SAME TYPE 800mA,125V FUSE.
REFER REPLACEMENT TO QUALIFIED SERVICE PERSONNEL.

C306	A9
C409	D8
C410	D9
C419	B9
C516	C9
C561	C9
C713	D8
C801	F2
C802	A6
C803	A6
C804	F1
C806	C2
C807	C3
C808	C3
C809	A2
C811	A3
C812	A3
C813	A3
C816	C5
C817	A7
C818	B8
C819	A7
C821	C6
C822	C7
C823	C7
C826	F7
C827	F8
CA26	D6
CA27	D7
CC01	D2
CC02	D4
CC03	D3
CH41	E9
CU02	F9
D806	A7
D811	B6
D821	F7
DC01	F1
DC02	F2
DC03	D3
DU36	F5
F806	F2
J801	F1
J802-1	F1
J802-2	F1
L406	D9
L501	C9
L551	C9
L801	A6
L806	A7
L816	C6
L817	C7
LA26	D6
Q306	A9
Q307	B9
Q406	C7
Q407	D8
Q702-1/2	D8
Q702-2/2	E8
Q801	B3
Q802	B4
Q803	C4
Q804	A5
Q805	B5
Q806	B7
Q807	B8
Q808	A7
Q809	B7
Q816	B6
QA26	D5
QA27	D5
QA28	D6
QA29-1/2	E6
QA29-2/2	E7
QA30	E5
QC01	D2
QC02	E2
QC03-1/2	E3
QC03-2/2	E3
QC04	D3
QC05	D2
QH41	D9
QH42	E9
QU02	F9
QU37-1/2	F6
QU37-2/2	F6
R406	D7
R419	B9
R717	D8
R806	C2
R807	C5
R808	C2
R809	C3
R810	C3
R811	A2
R812	A2
R813	A4
R814	A5
R815	A3
R816	A3
R817	C5
R818	A5
R821	A4
R822	B4
R826	A6
R827	B5
R828	B7
R829	A7
R831	C5
R832	C6
R835	C5
R836	A5
R841	F7
R842	F8
R843	F8
RA25	D5
RA26	D6
RA27	D6
RA28	E6
RA29	E7
RA30	D5
RC01	D2
RC02	E2
RC03	D2
RC04	D3
RC05	D3
RC06	D4
RC07	D4
RC08	D3
RC09	D4
RC10	D2
RC11	D2
RC12	D2
RC13	E2
RH41	E9
RH42	E9
RL21	B9
RL22	B9
RL23	A9
RU41	F3
RU42	F4
SU21	F3
SU22	F4

Signal line

□▷ : DCC REC(WRITE)

■▷ : DCC PLAY(READ)

⇨ : Digital Audio

➡ : Analog Audio(ACC PLAY)

No mark : STOP

▭ : ACC PLAY

( ) : DCC PLAY

(( )) : DCC REC

C101	A5	J101-7	B3	R140	F11
C102	B5	J101-8	B3	R141	C11
C103	B5	J101-9	B3	R142	E11
C104	B5	J102-1	D3	R147	D11
C105	B5	J102-10	E3	R148	E11
C106	B5	J102-11	E3	R149	D11
C107	B5	J102-12	E3	R150	E11
C108	C5	J102-13	E3	R151	C11
C109	C5	J102-14	E3	R152	F11
C110	C5	J102-15	E3	R176	A13
C111	D5	J102-16	E3	R177	A6
C112	D5	J102-17	E3	R201	G12
C113	D5	J102-18	E3	R202	G15
C114	E5	J102-19	F3	R203	D15
C115	E5	J102-2	D3	R204	D15
C116	E5	J102-20	F3	R205	D13
C117	E5	J102-21	F3	R206	E12
C118	F5	J102-22	F3	R207	E12
C119	F5	J102-23	F3	R208	F12
C120	F5	J102-24	F3	R209	C12
C121	F4	J102-25	F3	R210	G12
C122	E4	J102-26	F3	R211	F12
C123	E4	J102-3	D3	R212	B14
C124	C4	J102-4	D3	R215	B15
C125	B4	J102-5	D3		
C126	A4	J102-6	D3		
C131	A4	J102-7	D3	T.P 01	C6
C132	B4	J102-8	E3	T.P J110	B6
C133	B4	J102-9	E3	T.P J111	C7
C134	B4	J103-1	D16	T.P J112	B8
C135	C4	J103-10	C16	T.P J201	E12
C136	C4	J103-11	C16	T.P J202	E12
C137	D4	J103-12	C16		
C138	D4	J103-13	C16		
C139	E4	J103-14	C16		
C140	E4	J103-15	C16		
C141	F4	J103-17	C16		
C142	F4	J103-18	C16		
C143	C6	J103-19	C16		
C146	D6	J103-2	D16		
C147	D6	J103-20	B16		
C148	F9	J103-21	B16		
C149	C8	J103-22	B16		
C150	C6	J103-23	B16		
C151	C7	J103-24	B16		
C152	C6	J103-25	B16		
C156	B9	J103-26	B16		
C157	B9	J103-27	B16		
C158	A8	J103-28	B16		
C159	B8	J103-29	B16		
C160	A5	J103-3	D16		
C161	A6	J103-30	B16		
C162	B8	J103-31	A16		
C163	A13	J103-32	A16		
C171	D10	J103-33	A16		
C172	E10	J103-34	A16		
C173	D10	J103-35	A16		
C174	E10	J103-36	A16		
C175	D11	J103-4	D16		
C176	E11	J103-5	D16		
C177	C11	J103-6	D16		
C178	E11	J103-7	D16		
C179	D11	J103-8	D16		
C180	E11	J103-9	D16		
C181	D11				
C182	E11				
C187	C10	L101	A8		
C188	F9	L102	B8		
C189	C10	L201	B14		
C190	E9				
C197	D10				
C198	E10	Q101	D7		
C201	F15	Q105	B11		
C202	D15	Q106	F11		
C204	D12	Q116	A12		
C205	F12	Q117	B13		
C206	D12	Q118	A6		
C207	B14	Q119	B6		
		Q201	E13		
		Q202	C15		
J101-1	A3				
J101-10	B3				
J101-11	B3	R101	C6		
J101-12	B3	R102	D6		
J101-13	B3	R103	D6		
J101-14	B3	R104	C6		
J101-15	B3	R115	G9		
J101-16	C3	R116	F9		
J101-17	C3	R117	C10		
J101-18	C3	R118	E10		
J101-19	C3	R119	C9		
J101-2	A3	R120	C10		
J101-20	C3	R125	D10		
J101-21	C3	R126	E9		
J101-22	C3	R127	C10		
J101-23	C3	R128	F10		
J101-24	C3	R131	D10		
J101-25	C3	R132	E10		
J101-26	D3	R135	D10		
J101-3	A3	R136	E10		
J101-4	A3	R137	C10		
J101-5	B3	R138	F10		
J101-6	B3	R139	C11		

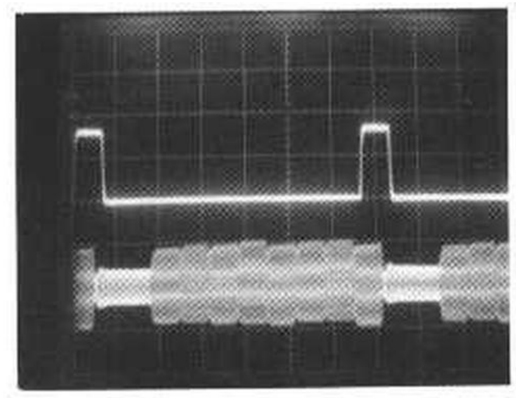

3 RDSYNC (CH1)

1 RDMUX (CH2)

CH1 Y: 0.2V x 10
X: 0.5μs
CH2 Y: 50mV x 10
X: 0.5μs

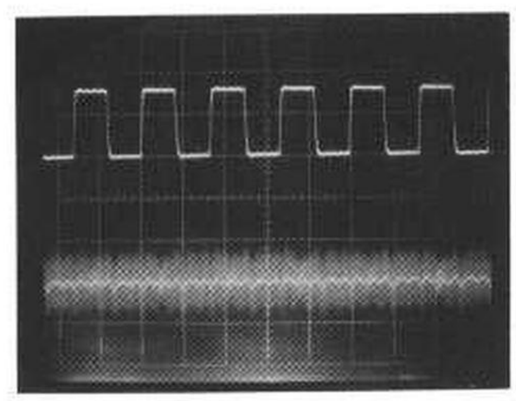

2 RDCLK (CH1)

1 RDMUX (CH2)

CH1 Y: 0.2V x 10
X: 0.2μs
CH2 Y: 50mV x 10
X: 0.2μs

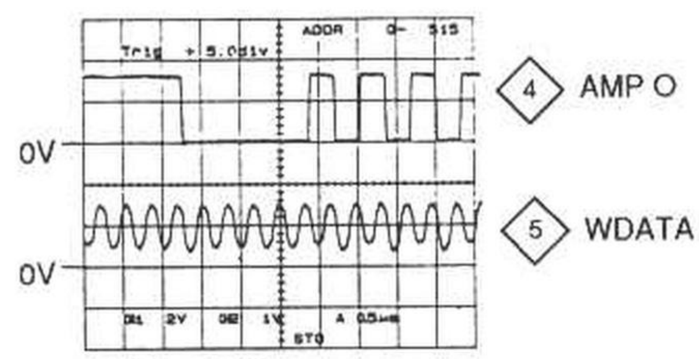

4 AMP O

5 WDATA

CH1 Y: 2V
X: 0.5μs

CH2 Y: 1V
X: 0.5μs

Signal line

□▷ : DCC REC(WRITE)

■▷ : DCC PLAY(READ)

⇨ : Digital Audio

➡ : Analog Audio(ACC PLAY)

No mark : STOP

▭ : ACC PLAY

( ) :DCC PLAY

(( )) :DCC REC

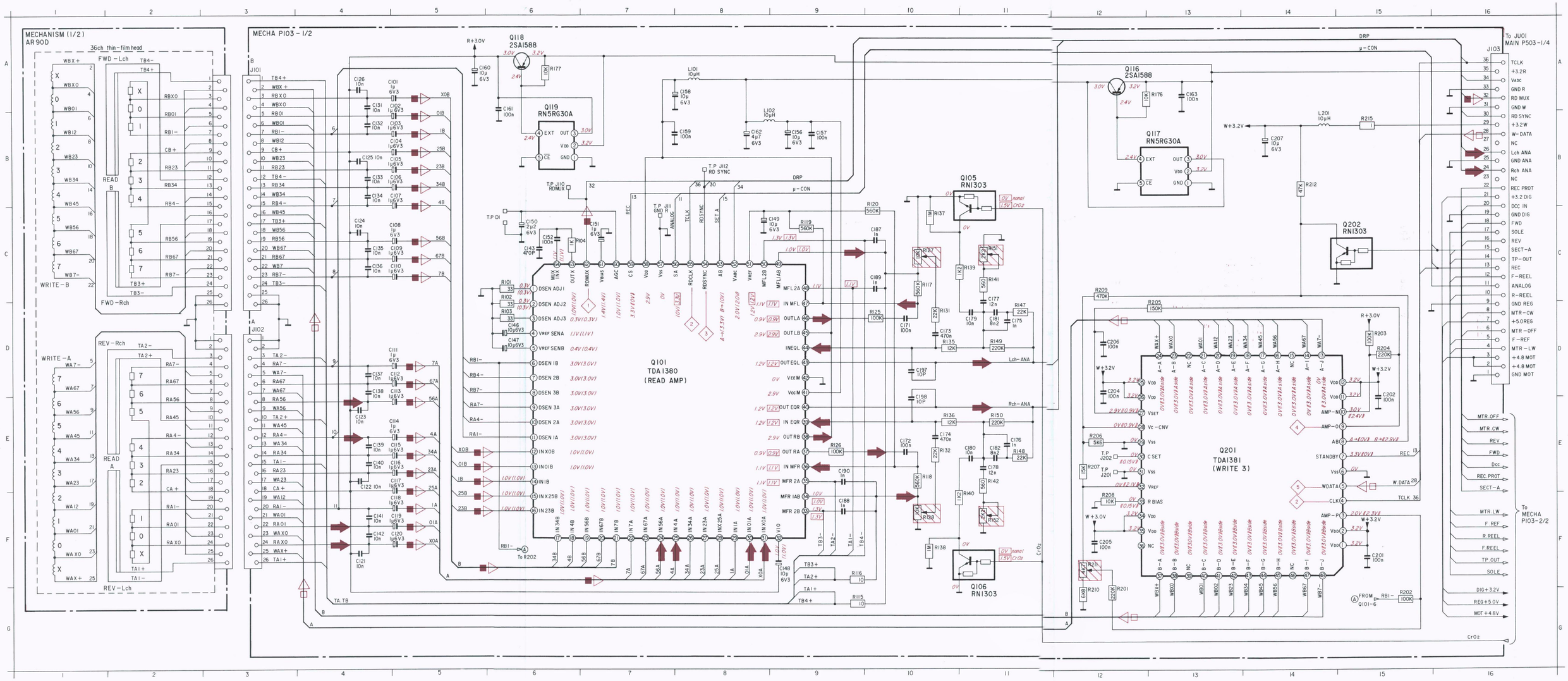
MECHANISM (1/2)
AR90D
36ch thin-film head
WRITE-B
FWD-Lch
FWD-Rch
READ B
WRITE-A
REV-Rch
REV-Lch
READ A
MECHA P103-1/2
J101
J102
Q118
2SA1588
Q119
RN5RG30A
Q101
TDA1380
(READ AMP)
Q105
RN1303
Q106
RN1303
Q116
2SA1588
Q117
RN5RG30A
Q202
RN1303
Q201
TDA1381
(WRITE 3)
To J101
MAIN P503-1/4
J103
To
MECHA
P103-2/2

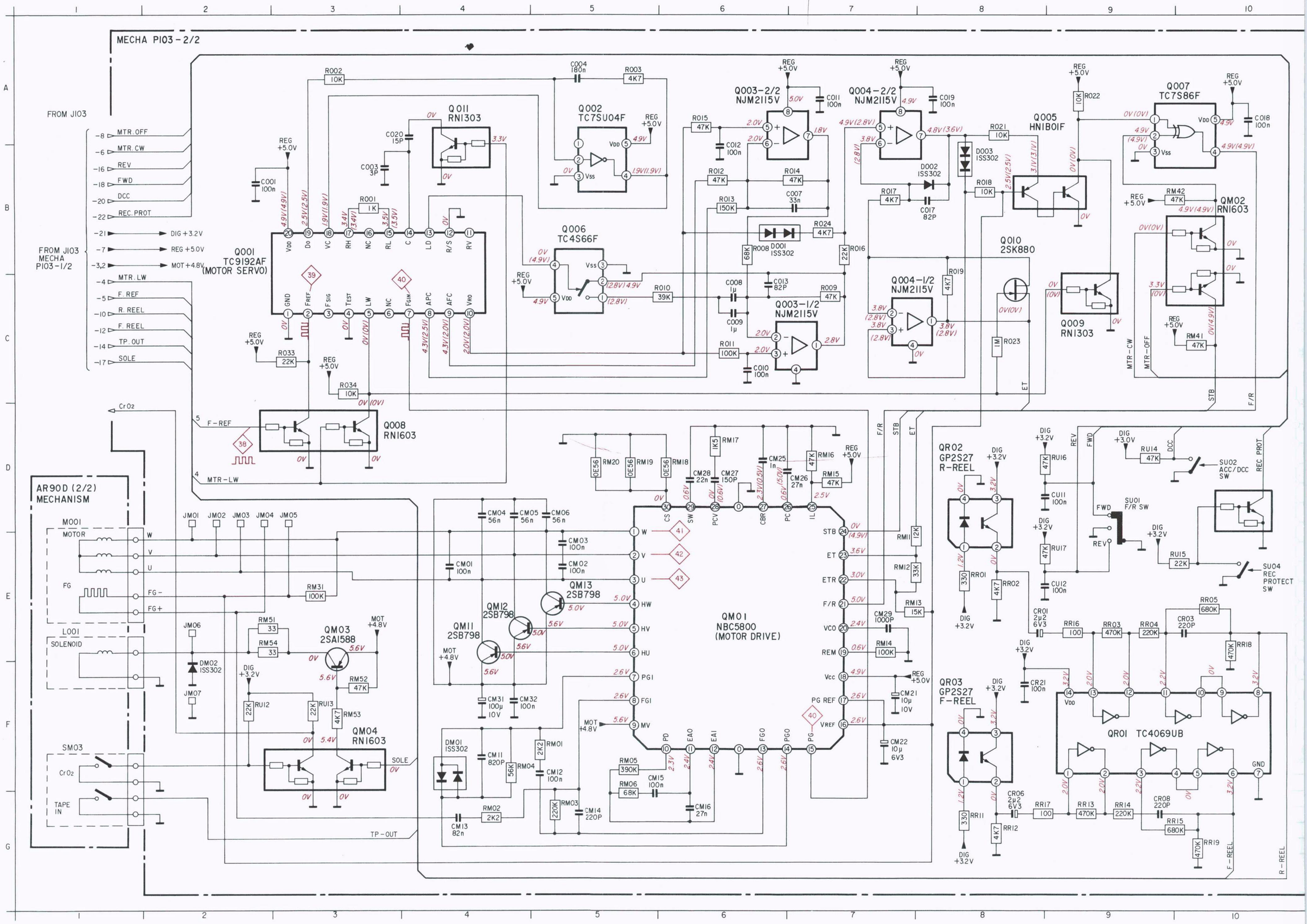
MECHA P103-2/2
FROM J103
MTR.OFF
MTR.CW
REV
FWD
DCC
REC.PROT
DIG +3.2V
REG +5.0V
MOT +4.8V
FROM J103 MECHA P103-1/2
MTR.LW
F.REF
R.REEL
F.REEL
TP.OUT
SOLE
CrO2
Q001 TC9192AF (MOTOR SERVO)
Q002 TC7SU04F
Q003-2/2 NJM2115V
Q004-2/2 NJM2115V
Q005 HN1B01F
Q006 TC4S66F
Q007 TC7S86F
Q008 RN1603
Q009 RN1303
Q010 2SK880
Q011 RN1303
Q003-1/2 NJM2115V
Q004-1/2 NJM2115V
QM02 RN1603
QR02 GP2S27 R-REEL
QR03 GP2S27 F-REEL
QR01 TC4069UB
QM01 NBC5800 (MOTOR DRIVE)
QM03 2SA1588
QM04 RN1603
QM11 2SB798
QM12 2SB798
QM13 2SB798
AR90D (2/2) MECHANISM
M001 MOTOR
L001 SOLENOID
SM03
TAPE IN
SU02 ACC/DCC SW
SU01 F/R SW
SU04 REC PROTECT SW
F-REF
MTR-LW
TP-OUT
MTR-CW
MTR-OFF
STB
F/R
ET
F-REEL
R-REEL

C001	B2	R016	B7
C003	B3	R017	B7
C004	A5	R018	B8
C007	B6	R019	C8
C008	C6	R021	A8
C009	C6	R022	A9
C010	C6	R023	C8
C011	A7	R024	B7
C012	B6	R033	C3
C013	C6	R034	C3
C017	B8	RM01	F5
C018	A10	RM02	G4
C020	A4	RM03	G5
CM01	E4	RM04	F4
CM02	E5	RM05	F5
CM03	E5	RM06	G5
CM04	D4	RM11	E7
CM05	D4	RM12	E7
CM06	D5	RM13	E7
CM11	F4	RM14	E7
CM12	F5	RM15	D7
CM13	G4	RM16	D7
CM14	G5	RM17	D6
CM15	G5	RM18	D6
CM16	G6	RM19	D5
CM21	F7	RM20	D5
CM22	F7	RM31	E3
CM25	D6	RM41	C10
CM26	D7	RM42	B9
CM27	D6	RM51	E2
CM28	D6	RM52	F3
CM29	E7	RM53	F3
CM31	F4	RM54	E2
CM32	F4	RR01	E8
CO19	A8	RR02	E8
CR01	E8	RR03	E9
CR03	E10	RR04	E9
CR06	G8	RR05	E10
CR08	G9	RR11	G8
CR21	F8	RR12	G8
CU11	D9	RR13	G9
CU12	E9	RR14	G9
		RR15	G10
		RR16	E9
D002	B8	RR17	G8
D003	B8	RR18	E10
DM01	F4	RR19	G10
DM02	F2	RU12	F2
DOO1	B6	RU13	F3
		RU14	D9
		RU15	E10
JM01	D2	RU16	D9
JM02	D2	RU17	E9
JM03	D2		
JM04	D3		
JM05	D2	SM03	F1
JM06	F2	SU01	D9
JM07	E2	SU02	D10
		SU04	E10
L001	E1		
M001	E1		
Q001	B3		
Q002	B5		
Q003-1/2	C7		
Q003-2/2	A6		
Q004-1/2	C7		
Q004-2/2	A7		
Q005	B9		
Q006	B5		
Q007	A10		
Q008	D3		
Q009	C9		
Q010	C8		
Q011	A4		
QM01	E6		
QM02	B10		
QM03	E3		
QM04	F3		
QM11	E4		
QM12	E4		
QM13	E5		
QR01	F9		
QR02	D8		
QR03	F8		
QU11	D10		
R001	B3		
R002	A3		
R003	A5		
R008	B6		
R009	C7		
R010	C6		
R011	C6		
R012	B6		
R013	B6		
R014	B7		
R015	A6		

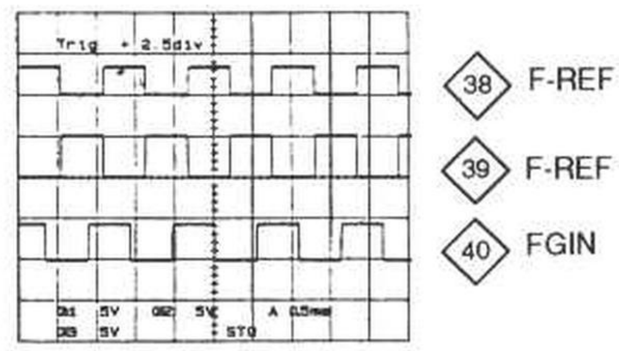

Y: 5V
X: 0.5ms

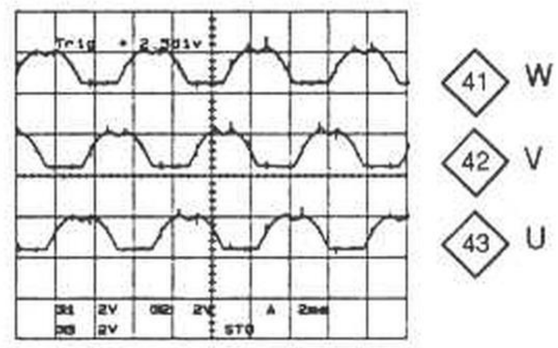

Y: 2V
X: 2ms

Signal line

□▷ : DCC REC(WRITE)

■▷ : DCC PLAY(READ)

⇨ : Digital Audio

➡ : Analog Audio(ACC PLAY)

No mark : STOP

▭ : ACC PLAY

( ) : DCC PLAY

(( )) : DCC REC

C001	F6	CM13	E7	R022	D8
C002	E4	CM14	E7	R023	D7
C003	E6	CM15	E3	R024	E4
C004	F4	CM16	E3	R033	F6
C007	E3	CM21	E8	R034	E7
C008	E3	CM22	E8	R101	A8
C009	E3	CM25	E8	R102	A8
C010	E3	CM26	E8	R103	A8
C011	E3	CM27	E8	R104	B8
C012	E3	CM28	E8	R115	B8
C013	E3	CM29	D8	R116	C7
C017	E7	CM31	F9	R117	C8
C018	D8	CM32	E8	R118	C8
C019	E7	CR01	C1	R119	C8
C020	E6	CR03	C1	R120	C8
C101	A8	CR06	C2	R125	C8
C102	A8	CR08	C2	R126	C7
C103	A7	CR21	C2	R127	C8
C104	A7	CU11	D5	R128	C7
C105	B7	CU12	D5	R131	C8
C106	B7			R132	C7
C107	B7			R135	C8
C108	A7	D001	E4	R136	C8
C109	B7	D002	E7	R137	C8
C110	B7	D003	E7	R139	C8
C111	B7	DM01	E8	R140	C7
C112	B7	DM02	D1	R141	C8
C113	B7			R142	C8
C114	B7			R148	C8
C115	B7	J101	B6	R149	C8
C117	B7	J102	C6	R150	C8
C118	B7	J103	E9	R151	C8
C119	C7	J110	B8	R152	C8
C120	C7	J111	C8	R176	B2
C121	C4	J112	D8	R177	B2
C122	C4	J201	D7	R201	D6
C123	C4	J202	D7	R202	D6
C124	B4	JM01	G8	R203	D6
C125	B4	JM02	F8	R204	D6
C126	B4	JM03	F8	R205	D7
C131	A7	JM04	F9	R206	D7
C132	A7	JM05	F9	R207	D7
C133	A7	JM06	G9	R208	D7
C134	A7	JM07	G9	R209	D7
C135	A7			R210	C7
C136	B7			R211	D7
C137	B7	L101	A3	R212	D6
C138	B7	L102	A3	R215	D2
C139	C7	L201	D2	RM01	E8
C140	C7			RM02	E7
C141	C7			RM03	E7
C142	C7	Q001	E6	RM04	E8
C143	B8	Q002	E4	RM05	E3
C146	A2	Q003	E3	RM06	E3
C147	A3	Q004	E7	RM11	E7
C148	C3	Q005	E7	RM12	D2
C149	B8	Q006	E3	RM13	D3
C150	A8	Q007	D8	RM14	D8
C151	B8	Q008	F6	RM15	D2
C152	B8	Q009	D7	RM16	D2
C156	A3	Q010	E7	RM17	E8
C157	C8	Q011	E6	RM18	E8
C158	A3	Q101	B8	RM19	E8
C159	B8	Q105	C8	RM20	F8
C160	B5	Q106	C7	RM31	G2
C161	C4	Q116	B2	RM41	D2
C162	A2	Q117	B2	RM42	D8
C163	B2	Q118	B2	RM51	D1
C171	C8	Q119	B2	RM52	D1
C172	C7	Q201	D7	RM53	D1
C173	C8	Q202	D2	RM54	D1
C174	C7	QM01	E2	RR01	D3
C175	C8	QM02	D8	RR02	D3
C176	C8	QM03	D1	RR03	C1
C177	C8	QM04	D2	RR04	C1
C178	C7	QM11	F2	RR05	C1
C179	C8	QM12	F2	RR11	C3
C180	C7	QM13	F2	RR12	C3
C181	C8	QR01	C2	RR13	C2
C182	C8	QR02	D3	RR14	C2
C187	B8	QR03	C3	RR15	C2
C188	C7	QU11	B1	RR16	C1
C189	B8			RR17	C2
C190	C7			RR18	C2
C197	C8	R001	E6	RR19	C2
C198	C8	R002	E4	RU12	B1
C201	D6	R003	E4	RU13	D2
C202	D6	R008	E3	RU14	B1
C204	D7	R009	E3	RU15	B1
C205	D7	R010	E3	RU16	D4
C206	D7	R011	E4	RU17	D4
C207	D2	R012	E3		
CM01	G2	R013	E3		
CM02	F2	R014	E3	SU01	D5
CM03	F2	R015	E3	SU02	A2
CM04	F2	R016	E3	SU04	A2
CM05	F2	R017	E7		
CM06	F2	R018	E7		
CM11	E8	R019	E7		
CM12	E8	R021	E7		

MECHANISM P.C. BOARD (P103)

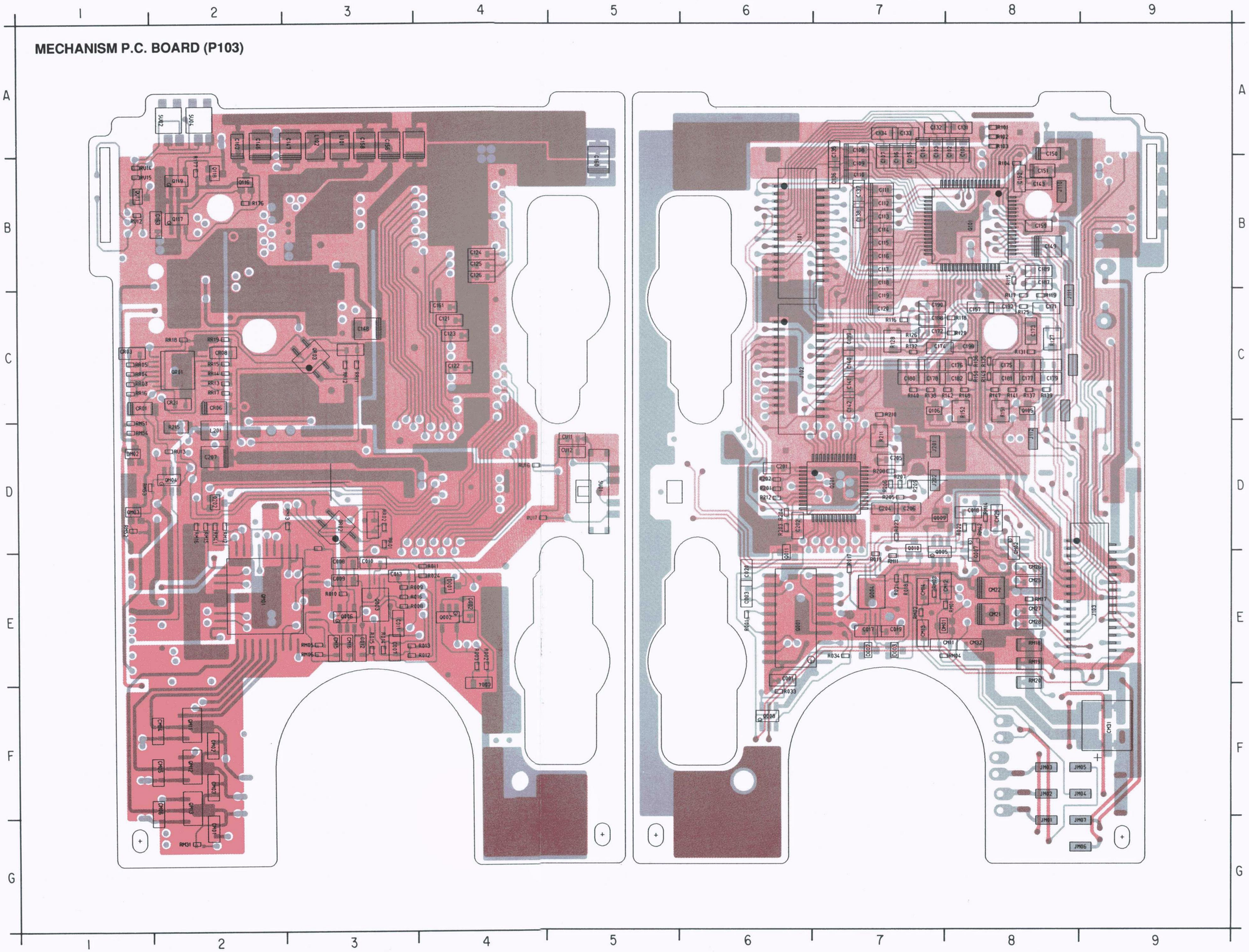

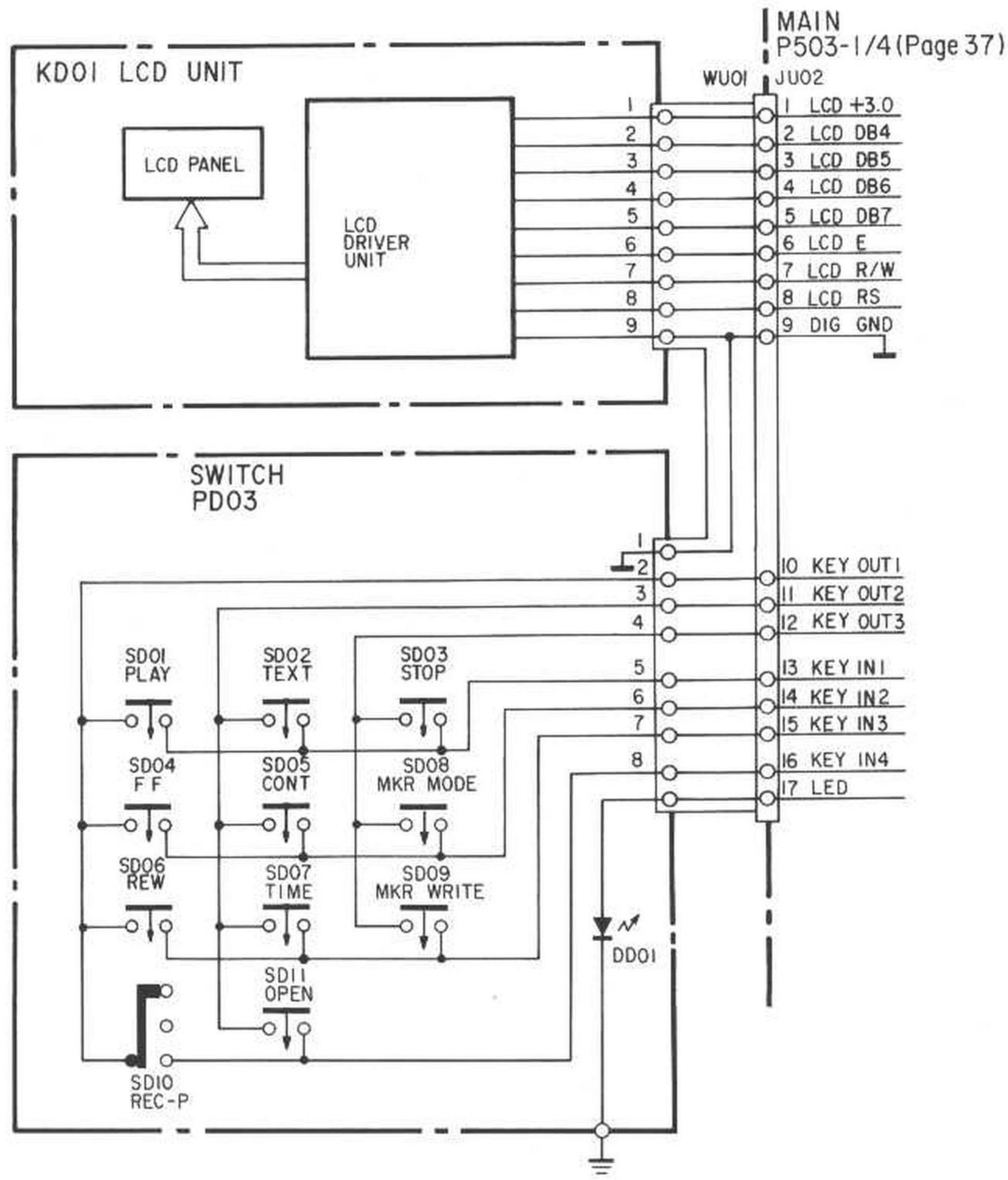

SWITCH P.C. BOARD (PD03)

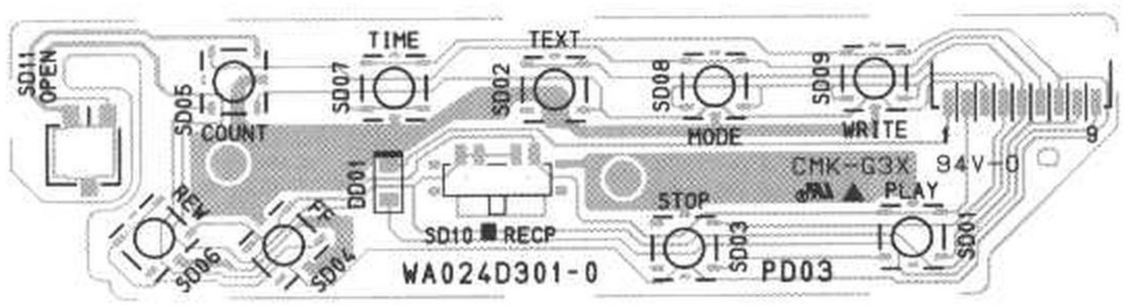

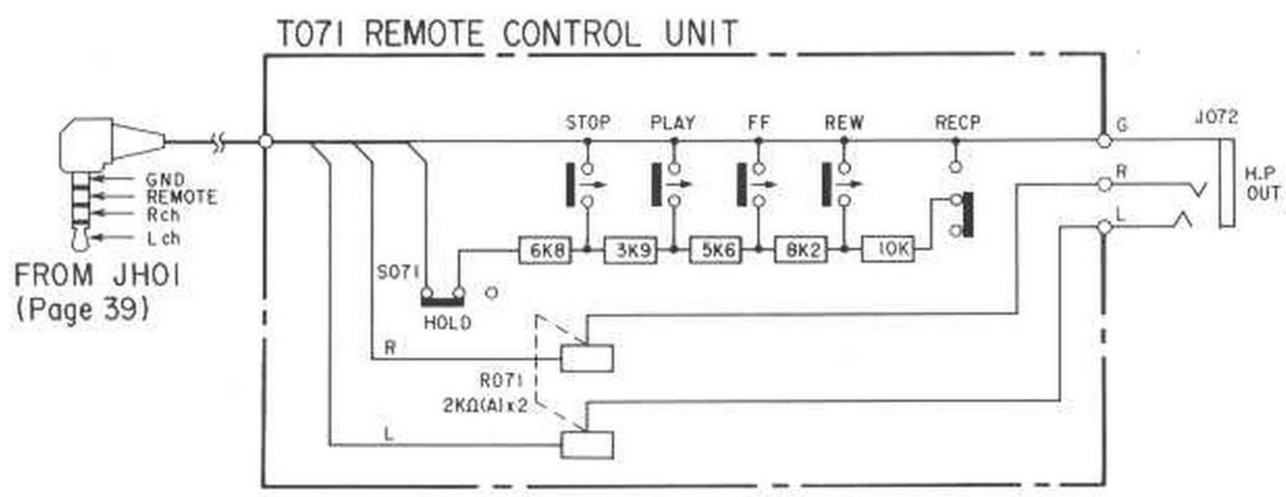

IC BLOCK DIAGRAM AND TERMINAL FUNCTION OF IC'S

• QA01 TDA1315 DAIO

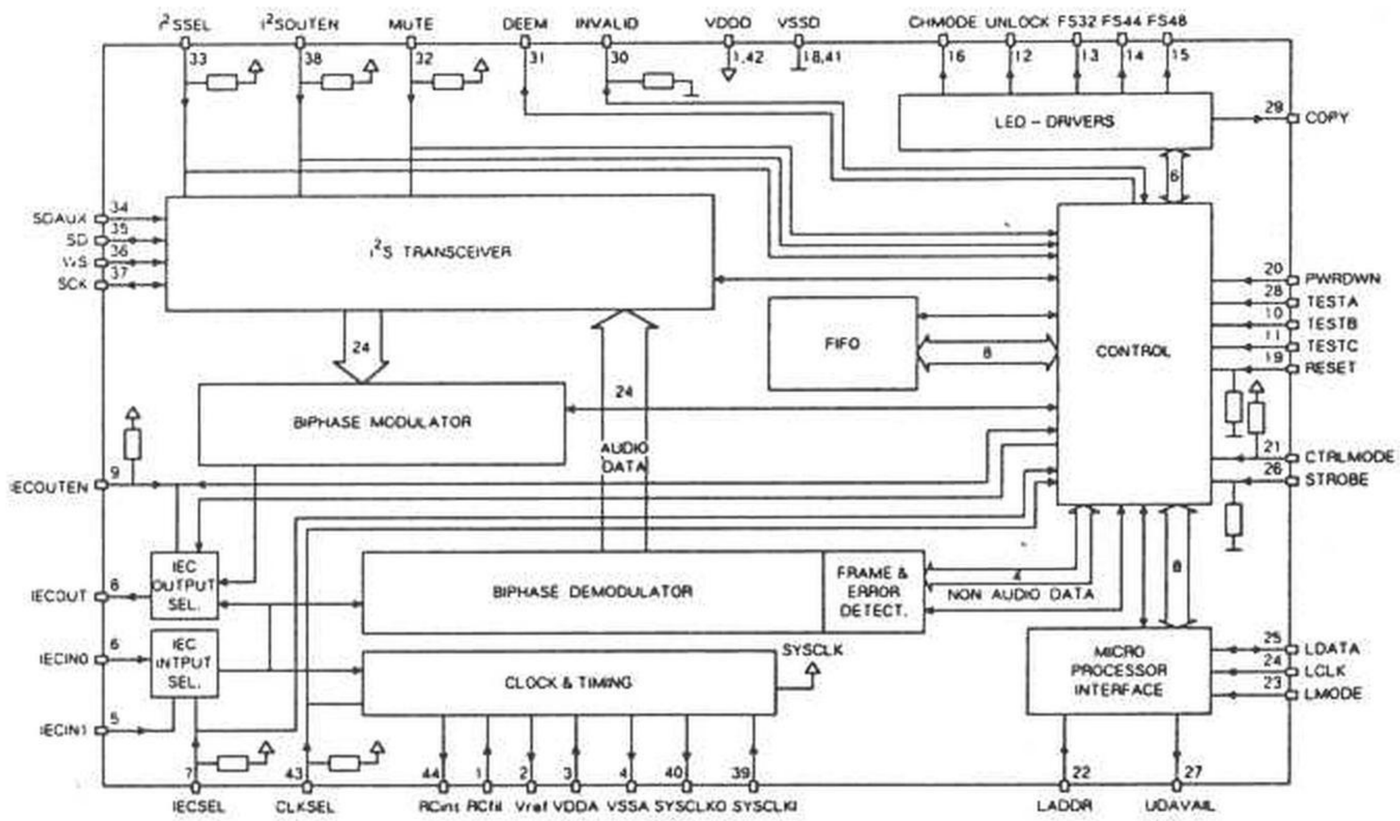

	Pin name	type	padcell	description
3	VDDA	-	E008	positive supply voltage (analogue part)
47/17	VDDD1/2	-	E008	positive supply voltage (digital part)
4	VSSA	-	E004	power supply return (analogue ground)
41/18	VSSD1/2	-	E009	power supply return (digital ground)
6	IECIN0	I	IPP04	TTL-level IEC input
5	IECIN1	I	E029	high-sensitivity IEC input
7	IECSEL	I	IUP04	select IEC input 0 or 1 (0 = IECIN0, 1 = IECIN1), this input has an internal pull-up resistor
8	IECOUT	O	OPFH3	digital audio output for optical and transformer link
9	IECOUTEN	I	IUP04	digital audio output enable (0 = enabled, 1 = disabled/tristate), this input has an internal pull-up resistor
35	SD	I/O	IOF24	serial audio data (I^2S)
37	SCK	I/O	IOF29	serial audio clock (I^2S)
36	WS	I/O	IOF24	word select (I^2S)
34	SDAUX	I	IPP04	auxiliary serial data input (I^2S)
33	I2SSEL	I	IUP04	select auxiliary input or normal input in transmit mode (0 = SDAUX, 1 = SD), this input has an internal pull-up resistor
38	I2SOUTEN	I	IUP04	serial audio output enable (0 = enabled, 1 = disabled/tristate), this input has an internal pull-up resistor
32	MUTE	I	IUP04	audio mute (0 = permanent mute, 1 = mute on receive error), this input has an internal pull-up resistor
21	CTRLMODE	I	IUP04	select microprocessor/stand-alone mode (0 = microprocessor, 1 = stand-alone), this input has an internal pull-up resistor
40	SYSCLKO	O	OPFA3	system clock output (in receive mode)
39	SYSCLKI	I	IPP09	system clock input (in transmit mode)
48	CLKSEL	I	IUP04	select system clock (256 / 384 * f_s) (0 = 384 * f_s, 1 = 256 * f_s), this input has an internal pull-up resistor
44	RCint	An.	E029	pin for integrating capacitor
1	RCfil	An.	E029	pin for PLL loop filter
2	Vref	An.	E029	pin for decoupling of internal reference voltage
26	STROBE	I	IDP04	strobe for control register (active high) this input has an internal pull-down resistor
25	LDATA	I/O	IOF24	µP interface data line
24	LCLK	I	IPP09	µP interface clock line
23	LMODE	I	IPP09	µP interface mode line
22	LADDR	I	IPP04	µP interface address switch (0 = 000001, 1 = 000010),
27	UDAVAIL	O	OPF23	synchronization for user data (0 = data available, 1 = no data)
12	UNLOCK	O	OPP41	PLL out-of-lock (0 = not locked, 1 = locked), this output can drive a LED
30	INVALID	I/O	IOD24	validity of audio sample (0 = valid sample, 1 = invalid sample) this pin has an internal pull-down resistor
16	CHMODE	O	OPP41	usage of channel status block (0 = professional use, 1 = consumer use) this output can drive a LED
13	FS32	O	OPP41	indicates sample frequency = 32 kHz (active low) this output can drive a LED
14	FS44	O	OPP41	indicates sample frequency = 44.1 kHz (active low) this output can drive a LED
15	FS48	O	OPP41	indicates sample frequency = 48 kHz (active low) this output can drive a LED
29	COPY	O	OPP41	copyright status bit (0 = copyright asserted, 1 = no copyright asserted) this output can drive a LED
31	DEEM	O	OPF23	pre-emphasis bit (0 = no pre-emphasis, 1 = with pre-emphasis)
19	RESET	I	IDP09	initialization after power-on, requires only an external capacitor to VDD this is a Schmitt trigger input with an internal pull-down resistor
20	PWRDWN	I	IPP04	enable power down (standby mode) (0 = normal application, 1 = standby mode)
28	TESTA	I	IPP04	enable factory test (0 = normal application, 1 = test clock enabled)
10	TESTB	I	IPP04	enable factory test (0 = normal mode, 1 = scan mode)
11	TESTC	I	IPP04	enable factory test (0 = normal application, 1 = observation outputs)

• QH01 BA3570FS HEAD PHON DRIVER

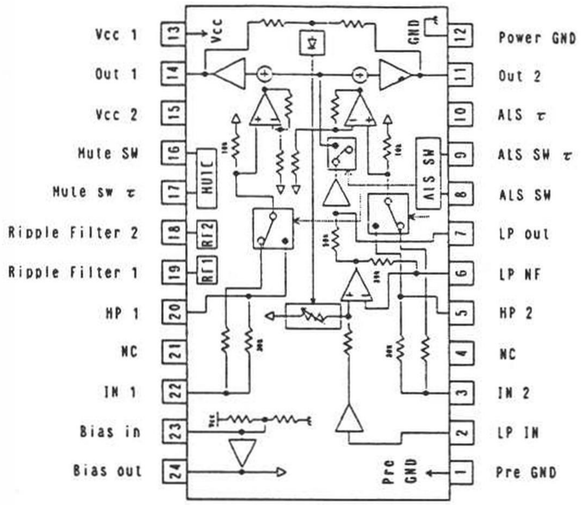

• QM01 NBC5800 MOTOR DRIVER

Pin No.	Mark	I/O Division	Function
1	W	O	W phase output terminal
2	V	O	V phase output terminal
3	U	O	U phase output terminal
4	HW	O	W phase pre-drive output
5	HV	O	V phase pre-drive output
6	HU	O	U phase pre-drive output
7	PGI	I	PG amp input
8	FGI	I	FG amp input
9	VM	I	Motor power supply terminal
10	PD	O	Phase det. terminal
11	EAO	O	Error amp output
12	EAI	I	Error amp input
13	FGOUT	O	FG amp output
14	PGOUT	O	PG amp output
15	PG	O	PG comparator output
16	VREF	I	Reference voltage terminal
17	PGREF	I	PG amp non-inversion input
18	VCC	I	Power supply terminal
19	RFM	—	Low frequency setting terminal
20	VCO	O	Voltage control OSC terminal
21	F/R	I	FWD/REV select terminal
22	ETR	I	Torque command voltage input
23	ET	I	Torque command input
24	STB	I	Standby input terminal
25	TL	I	Torque limit terminal
26	PCI	—	Phase compensating of current feedback terminal
27	CBR	—	Condition det. terminal
28	PCV	—	Phase compensating of voltage feedback terminal
29	SW	—	Slope OSC terminal
30	CS	I	Current det. input

• QQ01 NJM2072M LEVEL SENSOR

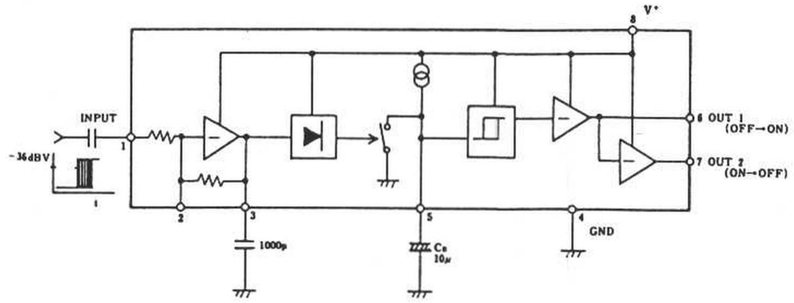

• QU01 μPD78058 μ-COM

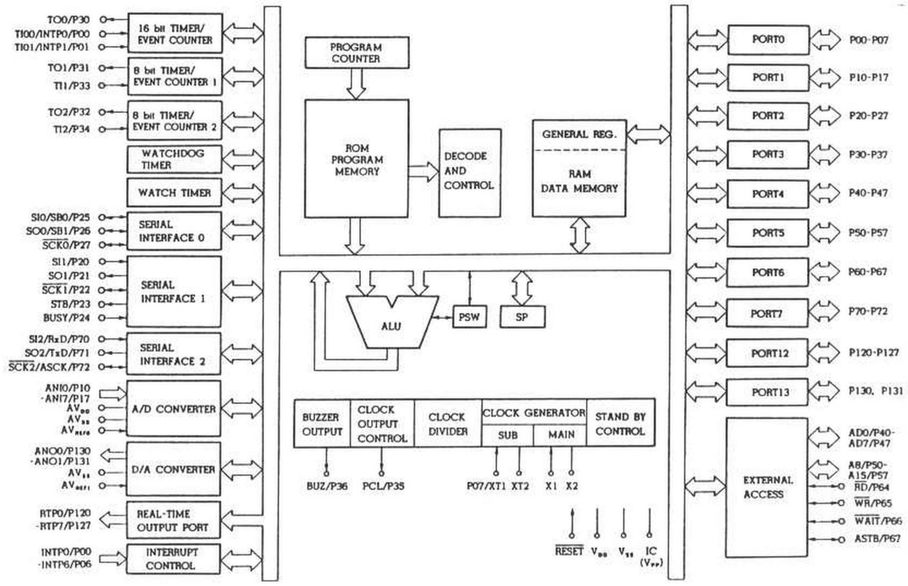

PIN	PORT	USE	IN/OUT	ACTIVE	PORT NAME	NOTICE
1	P15	ANI5	A/D		SPEED	
2	P16	ANI6	A/D		SIG	(H)PH/PH/PH/MEI(L)
3	P17	ANI7	A/D		DCC_IN	H:DCC L:ACC
4		AVss	-			A/D GND
5	P130		OUT	H:ON	ADPON	LOVAC(AD POWER ON)
6	P131		OUT	H:ON	DAPON	LOVAC DA power
7		AVref1	-			conect to Vdd
8	P70		IN	L:ON	_FWD	DIR SW
9	P71		OUT	H:QUICK	CHARGE	Select R for charge
10	P72		IN	L:ON	_REV	DIR SW
11	P20		OUT	L:LINE	_LINE	
12	P21		OUT	H:MIC	MIC_H	
13	P22		OUT	L:ALC	_ALC	
14	P23		OUT		L3MODE	L3 control
15	P24		OUT	H:P_DOW	PD_ADAS	ADAS POWER DOWN
16	P25	SIO	IN/OUT		L3DATA	2 lines serial data
17	P26		OUT			reserve
18	P27	SCK0	OUT		L3CLK	serial clock
19	P40		IN (R)		K_IN4	key assign
20	P41		IN (R)		K_IN3	key assign
21	P42		IN (R)		K_IN2	key assign
22	P43		IN (R)		K_IN1	key assign
23	P44		IN (R)	H:PROT	RECPROT	REC protect SW
24	P45		IN (R)	L:IN	_CAS	wake up CASSETT
25	P46		IN (R)	L:IN	_REMT	wake up REMOTE
26	P47		IN (R)	L:IN	_DC	extern DC power
27	P50		I/O		LCD_D4	LCD data bus
28	P51		I/O		LCD_D5	LCD data bus
29	P52		I/O		LCD_D6	LCD data bus
30	P53		I/O		LCD_D7	LCD data bus
31	P54		OUT		LCD_E	LCD control
32	P55		OUT		LCD_R_W	LCD control
33		VSS	-			GND
34	P56		OUT		LCD_RS	LCD control
35	P57		IN	H:REV	REV_MOD	REV_REC/CONT_PLAY SW
36	P60		OUT	L:ACTIV	K_OUT1	key assign
37	P61		OUT	L:ACTIV	K_OUT2	key assign
38	P62		OUT	L:ACTIV	K_OUT3	key assign
39	P63		OUT	L:ON	_R_LED	REC LED
40	P64		OUT	H:ACTIV	DAIO_SB	same SYNCDAIO

PIN	PORT	USE	IN/OUT	ACTIVE	PORT NAME	NOTICE
41	P65		OUT	H:P_DN	PD_DAIO	DAIO power down
42	P66		IN	H:HOLD	HOLD	HOLD SW
43	P67		OUT	H:ON	AN_REC	ana. rec circuit pow
44	P30	TO0	OUT	920 Hz	F_REF	square wave out
45	P31		OUT	H:MUTE	MUTE	AUDIO mute
46	P32		OUT	H:ON	POWER	all circuit power
47	P33		OUT	H:STAND	STANBY	dig ics power
48	P34	TI2	OUT	H:RESET	R_DCC	reset DCC ICs
49	P35		OUT	H:ANA	ANALOG	Audio ana. or dig.
50	P36	BUZ	OUT		BEEP	BEEP sound
51	P37		OUT	L:REC	_REC	REC/PB circuit
52	P120		OUT	H:A	SECT_A	READ_3
53	P121		OUT	H:ON	SOLE_ON	SOLENOID ON/OFF
54	P122		OUT	L:COAX	_COAX	
55	P123		IN		L3INT	DRP
56	P124		IN	L:IN	TP_OUT	TAPE detect SW
57	P125		OUT	H:LOW_G	MTR_LW	motor gain
58	P126		OUT	L:ON	MTR_OFF	motor off
59	P127		OUT	H:CW	MTR_CW	motor rotate CW/CCW
60		RESET	-	L:RESET	RESETU	uP reset in
61	P00	INTP0	INT	L_EDGE	R_REEL	R_REEL (neg.edge)
62	P01	INTP1	INT	L_EDGE	F_REEL	F_REEL (neg.edge)
63	P02	INTP2	INT	H:NO DA	UDAVAIL	from DAIO
64	P03	INTP3	INT		UNLOCK	from DAIO
65	P04	INTP4	INT	L_EDGE	L3REF	DRP(neg.edge)
66	P05	INTP5	INT	L:OVER	NO_OVR	LOVAC(over load)
67	P06	INTP6	IN	H:SILEN	SILENC	USE ONLY ACC
68		Vdd	-			Vdd
69		X2	-			main system x'tal
70		X1	-			main system x'tal
71		IC(Vpp)	-			connect to Vss
72		XT2	-			open (sub X'tal)
73	P07		IN	L:OK	F_COPY	free copy
74		AVdd	-			A/D Vdd
75		AVref0	-			A/D reference V
76	P10	ANI0	A/D		BATT_V	battery detect
77	P11	ANI1	A/D		REMOTE	remote detect
78	P12	ANI2	A/D		ANA_SI.	LINE, MIC_H, MIC_L
79	P13	ANI3	A/D		PG_SI.	PG_IN, DIG, OPT
80	P14	ANI4	A/D		CHRG_V	for charge

• Q001 TC9192AF MOTOR CONTROLLER

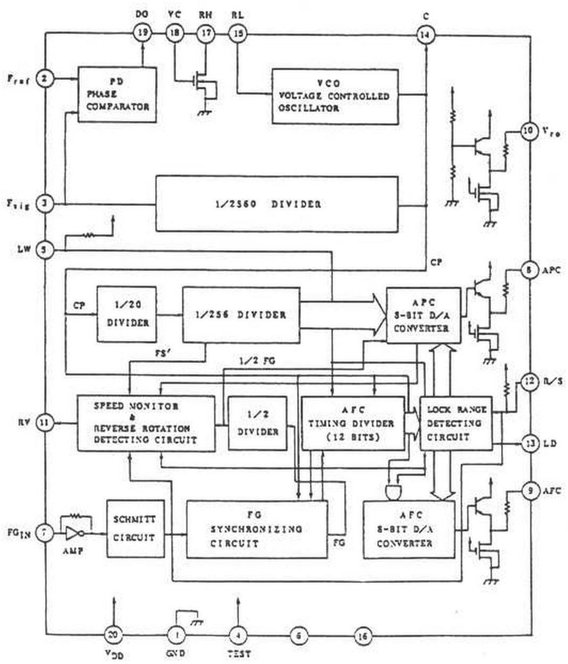

PIN NO.	SYMBOL	FUNCTION, OPERATION	REMARKS
20	V_{DD}	Power supply voltage terminal and grounding terminal.	
1	GND		
2	Fref	Reference frequency input terminal for phase comparator.	C-MOS input
3	Fsig	1/2560 dividing output terminal of VCO frequency, internally comparison signal is made.	C-MOS output
5	LW	Switching terminal of lock range. at LW="L", normal range. at LW="H", double range.	Built-in pull-up resistance speed
7	FGIN	Pulse input terminal for indicating the rotation speed of motor.	Built-in amp.
8	APC	Output terminal of APC 8-bit D/A converter output.	Built-in bipolar transistor
9	AFC	Output terminal fo AFC 8-bit D/A converter output.	Built-in bipolar transistor
10	Vro	Output terminal for reference voltage.	Built-in bipolar transistor
11	RV	Reverse rotation signal for output driver.	C-MOS output
12	RIS	RUN/STOP switching terminal of motor at RIS="L", RUN. at RIS="H", STOP	Built-in pull-up resistance
13	LD	Lock detecting terminal. When the rotation frequency is within lock range, "H" level, and in other cases, "L" level.	C-MOS output
14	C	Terminal attached with capacitor for adjusting frequency. Internal control signal is made.	
15	RL	Current control terminal for controlling VCO frequency.	
17	RH	Current control output terminal for VCO	Nch open drain
18	VC	Voltage control input terminal for VCO	
19	DO	Output terminal of phase comparator	C-MOS output
4	Test	Input terminal of internal test. Generally ground.	C-MOS input

• Q101 TDA1380 READ3

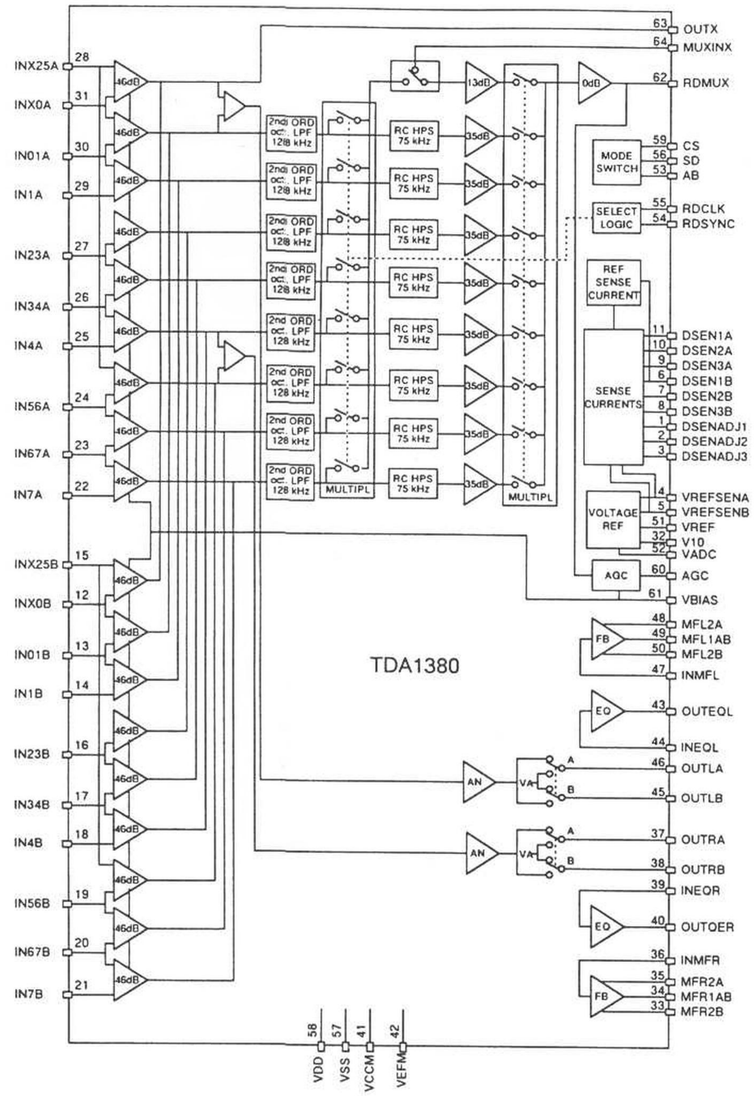

SYMBOL	PIN	DESCRIPTION
DSENADJ1	1	Adjust pin for DCC sense current 1 (A,B)
DSENADJ2	2	Adjust pin for DCC sense current 2 (A,B)
DSENADJ3	3	Adjust pin for DCC sense current 3 (A,B)
VREFSENA	4	Reference voltage output DCC sense (A)
VREFSENB	5	Reference voltage output DCC sense (B)
DSEN1B	6	DCC sense current output 1 (B)
DSEN2B	7	DCC sense current output 2 (B)
DSEN3B	8	DCC sense current output 3 (B)
DSEN3A	9	DCC sense current output 3 (A)
DSEN2A	10	DCC sense current output 2 (A)
DSEN1A	11	DCC sense current output 1 (A)
INX0B	12	Auxiliary channel input / channel 0 input (B)
IN01B	13	Channel 0 / 1 input (B)
IN1B	14	Channel 1 input (B)

SYMBOL	PIN	DESCRIPTION
INX25B	15	Channel AUX / 2 / 5 input (B)
IN23B	16	Channel 2 / 3 input (B)
IN34B	17	Channel 3 / 4 input (B)
IN4B	18	Channel 4 input (B)
IN56B	19	Channel 5 / 6 input (B)
IN67B	20	Channel 6 / 7 input (B)
IN7B	21	Channel 7 input (B)
IN7A	22	Channel 7 input (A)
IN67A	23	Channel 6 / 7 input (A)
IN56A	24	Channel 5 / 6 input (A)
IN4A	25	Channel 4 input (A)
IN34A	26	Channel 3 / 4 input (A)
IN23A	27	Channel 2 / 3 input (A)
INX25A	28	Channel AUX / 2 / 5 input (A)
IN1A	29	Channel 1 input (A)
IN01A	30	Channel 0 / 1 input (A)
INX0A	31	Auxiliary channel input / channel 0 input (A)
V10	32	Reference voltage output for DCC inputs
MFR2B	33	Right channel feedback amplifier output 2 (B)
MFR1AB	34	Right channel feedback amplifier output 1 (A,B)
MFR2A	35	Right channel feedback amplifier output 2 (A)
INMFR	36	Right channel feedback amplifier input
OUTRA	37	Right channel ACC output (A)
OUTRB	38	Right channel ACC output (B)
INEQR	39	Right channel pre-egalisation amplifier input
OUTEQR	40	Right channel pre-egalisation amplifier output
V_{CCM}	41	Positive supply for feedback amplifiers
V_{EEM}	42	Ground for feedback amplifiers
OUTEQL	43	Left channel pre-egalisation amplifier output
INEQL	44	Left channel pre-egalisation amplifier input
OUTLB	45	Left channel ACC output (B)
OUTLA	46	Left channel ACC output (A)
INMFL	47	Left channel feedback amplifier input
MFL2A	48	Left channel feedback amplifier output 2 (A)
MFL1AB	49	Left channel feedback amplifier output 1 (A,B)
MFL2B	50	Left channel feedback amplifier output 2 (B)
VREF	51	Reference voltage output
VADC	52	ADC reference voltage output
AB	53	Tape side A or B selection input
RDSYNC	54	Read sync pulse input
RDCLK	55	Read clock pulse input
SD	56	Select DCC mode input
V_{SS}	57	General ground
V_{DD}	58	General positive supply
CS	59	Chip select input
AGC	60	AGC time constant
VBIAS	61	DCC preamplifier gain control voltage input
RDMUX	62	Output of sampled and multiplexed auxiliary and main data signals
OUTX	63	Auxiliary channel preamplifier output
MUXINX	64	Auxiliary channel multiplexer input

• Q201 TDA1381 WRITE3

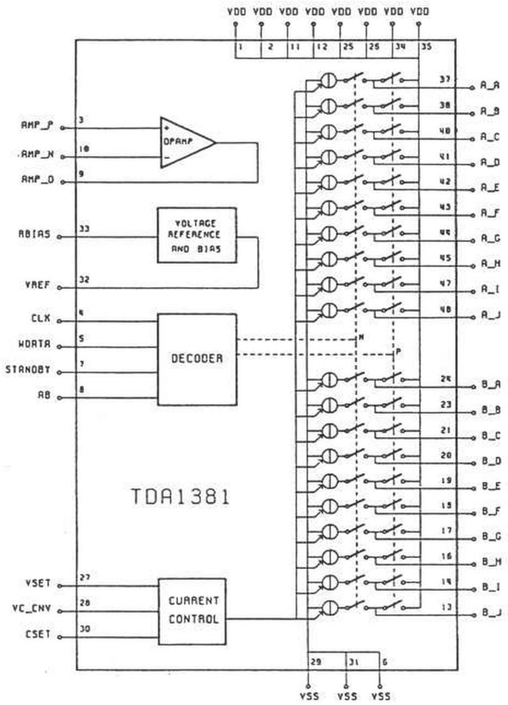

PIN	NAME	DESCRIPTION
1	V_{DD}	positive supply voltage
2	V_{DD}	positive supply voltage
3	AMP_P	opamp non-inverting input
4	CLK	write CLOCK input
5	WDATA	write data input
6	V_{SS}	ground
7	STANDBY	standby mode control input
8	AB	tape sector select input
9	AMP_O	opamp output
10	AMP_N	opamp inverting input-
11	V_{DD}	positive supply voltage
12	V_{DD}	positive supply voltage
13	B_J	sector B write pulse output
14	B_I	sector B write pulse output
15	n.c.	(not connected)
16	B_H	sector B write pulse output
17	B_G	sector B write pulse output
18	B_F	sector B write pulse output
19	B_E	sector B write pulse output
20	B_D	sector B write pulse output
21	B_C	sector B write pulse output
22	n.c.	(not connected)
23	B_B	sector B write pulse output
24	B_A	sector B write pulse output

PIN	NAME	DESCRIPTION
25	V_{DD}	positive supply voltage
26	V_{DD}	positive supply voltage
27	VSET	control voltage input 1
28	VC_CNV	control voltage input 2
29	V_{SS}	ground
30	CSET	control current input
31	V_{SS}	ground
32	VREF	reference voltage output
33	RBIAS	bias current resistor
34	V_{DD}	positive supply voltage
35	V_{DD}	positive supply voltage
36	n.c.	(not connected)
37	A_A	sector A write pulse output
38	A_B	sector A write pulse output
39	n.c.	(not connected)
40	A_C	sector A write pulse output
41	A_D	sector A write pulse output
42	A_E	sector A write pulse output
43	A_F	sector A write pulse output
44	A_G	sector A write pulse output
45	A_H	sector A write pulse output
46	n.c.	(not connected)
47	A_I	sector A write pulse output
48	A_J	sector A write pulse output

NOTE : Section A and section B are connected in reverse on this model.

• Q391 TDA1309H LOVAC

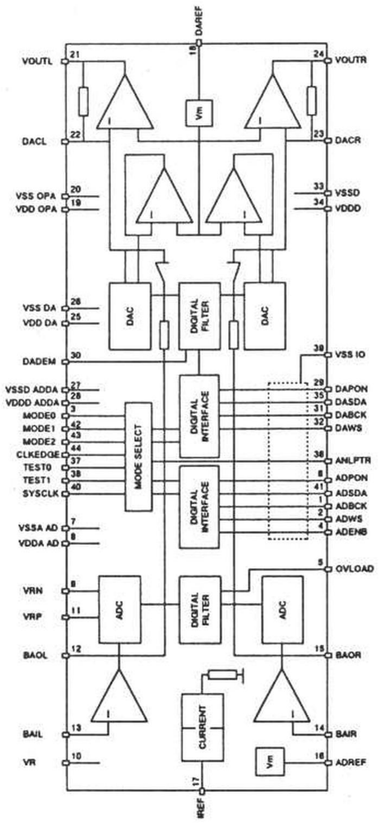

Nr	Name	Type	Part	Description
1	ADBCK	input	A/D	Bit clock = 32.f_s or 64.f_s
2	ADWS	input	A/D	Word Select = f_s
3	MODE0	input	A/D D/A	Mode selection
4	ADENB	input	A/D	Serial Data enable
5	OVLOAD	output	A/D	Overload flag left and right channel
6	ADPON	input	A/D	Power On mode (H = power on)
7	VSSA-AD	supply	A/D	Analog ground supply voltage
8	VDDA-AD	supply	A/D	Analog positive supply voltage
9	VRN	input	A/D	Negative reference voltage input (gnd)
10	VR	decoupl	A/D	Decoupling capacitor
11	VRP	decoupl	A/D	Positive reference voltage decoupl. cap.
12	BAOL	output	A/D	Input amplifier output left
13	BAIL	input	A/D	Input amplifier virtual ground left
14	BAIR	input	A/D	Input amplifier virtual ground right
15	BAOR	output	A/D	Input amplifier output right
16	ADREF	decoupl	A/D	Decoupling capacitor
17	IREF	input	A/D D/A	Reference current resistor
18	DAREF	decoupl	D/A	Decoupling capacitor
19	VDD-OPA	supply	A/D D/A	Opamps analog positive supply voltage
20	VSS-OPA	supply	A/D D/A	Opamps analog ground supply voltage
21	VOUTL	output	D/A	DA voltage output left
22	DACL	output	D/A	DA current output left
23	DACR	output	D/A	DA current output right
24	VOUTR	output	D/A	DA voltage output right
25	VDDA-DA	supply	D/A	Analog positive supply voltage
26	VSSA-DA	supply	D/A	Analog ground supply voltage
27	VSSD-AD/DA	supply	A/D D/A	AD/DA digital ground supply voltage
28	VDDD-AD/DA	supply	A/D D/A	AD/DA digital positive supply voltage
29	DAPON	input	D/A	Power On mode (H = power on)
30	DADEM	input	D/A	DA Digital de-emphasis
31	DABCK	input	D/A	Bit clock = 32.f_s or 64.f_s
32	DAWS	input	D/A	Word Select = f_s
33	VSSD	supply	A/D D/A	Digital filters ground supply voltage
34	VDDD	supply	A/D D/A	Digital filters positive supply voltage
35	DASDA	input	D/A	Serial data
36	ANLPTR	input	A/D D/A	Analog loopthrough (High is loopthrough)
37	TEST0	input	A/D D/A	Enable test mode (Low is normal mode)
38	TEST1	input	A/D D/A	Enable test mode (Low is normal mode)
39	VSS-IO	supply	A/D D/A	Digital I/O ground supply voltage
40	SYSCLK	input	A/D D/A	System clock, SCK = 256.f_s
41	ADSDA	output	A/D	Serial Data
42	MODE1	input	A/D D/A	Mode selection
43	MODE2	input	A/D D/A	Mode selection
44	CLKEDGE	input	A/D D/A	Bit clock rising/falling edge

• Q501 SAA3323 DRP

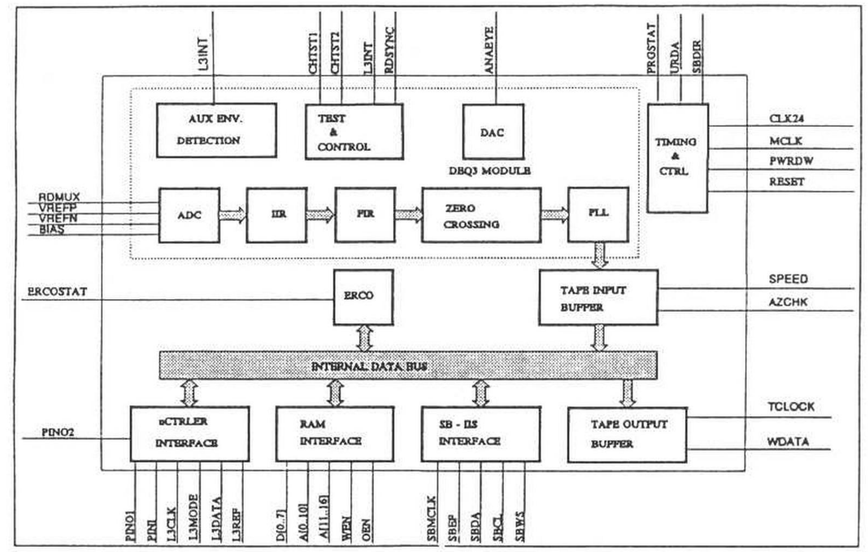

Pin No.	Name	Type	Comment
1	SBWS	I/O 1mA	Word select for SB-I2S interface
2	SBCL	I/O 1mA	Bit clock for SB-I2S interface
3	SBDA	I/O 1mA	Data line for SB-I2S interface
4	SBDIR	O 1mA	Direction line for SB-I2S interface
5	SBMCLK	I	Master clock for SB-I2S interface
6	URDA	O 1mA	Unreliable data
7	L3MODE	I	Mode line for L3 interface
8	L3CLK	I	Bit Clock line for L3 interface
9	L3DATA	I/O 2mA	Serial data line for L3 interface
10	L3INT	O 1mA	L3 interrupt output
11	VDD1	P	Digital +VDD
12	VSS1	P	Digital ground
13	L3REF	O 1mA	L3 bus timing reference
14	RESET	I	Reset DRP chip
15	PWRDWN	I	Put DRP into power down mode
16	CLK24	I	24.576 MHz clock input
17	AZCHK	O 1mA	channel 0 and channel 7 azimuth monitor
18	MCLK	O 1mA	6.144 MHz clock output
19	PRGSTAT	O 1mA	TFE3 program status, for test only
20	ERCOSTAT	O 1mA	ERCO status, for test only
21	OEN	O 2mA	Output Enable for RAM
22	A10/RAS	O 2mA	Address SRAM; RAS DRAM
23	VDD2	P	Power digital +VDD
24	VSS2	P	Power digital ground
25	D7	I/O 4mA	Data SRAM;
26	D6	I/O 4mA	Data SRAM;
27	D5	I/O 4mA	Data SRAM;
28	D4	I/O 4mA	Data SRAM;
29	D3	I/O 4mA	Data SRAM; Data DRAM
30	D2	I/O 4mA	Data SRAM; Data DRAM
31	D1	I/O 4mA	Data SRAM; Data DRAM
32	VDDR	P	Power digital +VDD for RAM
33	VSSR	P	Power digital ground for RAM
34	D0	I/O 4mA	Data SRAM; Data DRAM
35	A0	O 2mA	Address SRAM; Address DRAM
36	A1	O 2mA	Address SRAM; Address DRAM
37	A2	O 2mA	Address SRAM;Address DRAM
38	A3	O 2mA	Address SRAM; Address DRAM
39	A4	O 2mA	Address SRAM; Address DRAM
40	VSS3	P	Power digital ground

Pin No.	Name	Type	Comment
41	VDD3	P	Power digital +VDD
42	A5	O 2mA	Address SRAM; Address DRAM
43	A6	O 2mA	Address SRAM; Address DRAM
44	A7	O 2mA	Address SRAM; Address DRAM
45	A12/PinO5	O 2mA	Address SRAM; Port expander output 5
46	A14/PinO1	O 2mA	Address SRAM; Port expander output 1
47	A16/PinO3	O 2mA	Address SRAM; Port expander output 3
48	A15/PinO4	O 2mA	Address SRAM; Port expander output 4
49	WEN	O 2mA	Write enable for RAM
50	A13/PinO2	O 2mA	Address SRAM; Port expander output 2
51	A8	O 2mA	Address SRAM; Address DRAM
52	VDD4	P	Power digital +VDD
53	VSS4	P	Power digital ground
54	A9/CAS	O 2mA	Address SRAM; CAS for DRAM
55	A11	O 2mA	Address SRAM;
56	SPEED	tO 1mA	PWM capstan control output for deck
57	PinO2/SPEEDB	tO 1mA	Port expander output 2 / PWM capstan control output for deck B
58	WDATA	O 1mA	Serial output to WRITE AMPLIFIER
59	TCLOCK	O 1mA	3.072 MHz clock output for tape I/O
60	VSS5	P	Power digital ground
61	VDD5	P	Power digital +VDD
62	TEST2	Id	Test mode select
63	RDMUX	Ia	Analogue mpx'ed input from READ AMP
64	VREFP	Ia	ADC reference voltage P
65	VREFN	Ia	ADC reference voltage N
66	SUBSTR	Ia	Substrate connection
67	BIAS	Ia	Bias current for ADC
68	VSSA	P	Analogue ground
69	VDDA	P	Analogue +VDD
70	ANAEYE	Oa	Analogue eye pattern output
71	RDSYNC	O 1mA	Synchronization output for READ AMP
72	VDD6	P	Power digital +VDD
73	VSS6	P	Power digital ground
74	CHTST1	O 1mA	Channel test pin 1
75	CHTST2	O 1mA	Channel test pin 2
76	TEST0	Id	Test mode select
77	TEST1	Id	Test mode select
78	PINI	I	Port expander input
79	PINO1	O 1mA	Port expander output 1
80	SBEF	O 1mA	SB-I2S error flag line

Where: I = input, Ia = analogue input, Id = input with pull-down resistance, Ih = hysteresis input,
I/O = bidirectional, O = output, tO = tri-state output, P = power.

• Q502 μPD43256BGU-B12 S-RAM

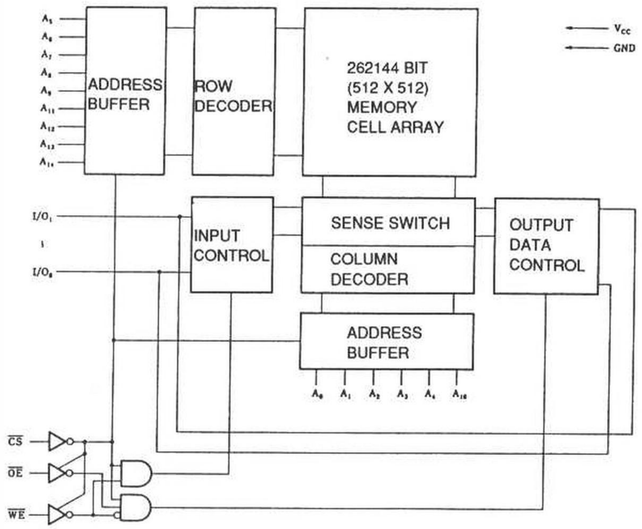

PIN NO.	NAME	I/O	FUNCTION
1	A14	I	Address input
2	A12	I	Address input
3	A7	I	Address input
4	A6	I	Address input
5	A5	I	Address input
6	A4	I	Address input
7	A3	I	Address input
8	A2	I	Address input
9	A1	I	Address input
10	A0	I	Address input
11	D0	I/O	Data input output
12	D1	I/O	Data input output
13	D2	I/O	Data input output
14	Vss	–	GND
15	D3	I/O	Data input output
16	D4	I/O	Data input output
17	D5	I/O	Data input output
18	D6	I/O	Data input output
19	D7	I/O	Data input output
20	CS	I	Chip select
21	A10	I	Address input
22	OEN	I	Output enable inout
23	A11	I	Address input
24	A9	I	Address input
25	A8	I	Address input
26	A13	I	Address input
27	WEN	I	Write enable input
28	Vcc	I	Power supply

• Q551 SAA2003 SFC3

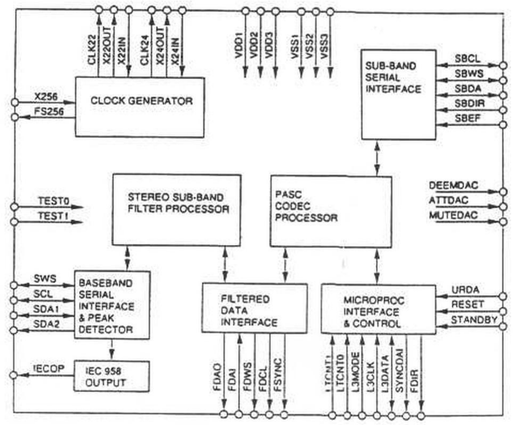

Table 1 Revised Device Pinning

Pin	Name	Type	Function
1	FDAI	I	filtered serial data input (from ADAS)
2	FDCL	O	filtered data bit clock
3	FDWS	O	filtered data word select
4	CLK22	O	22.5792 MHz buffered clock output
5	X22OUT	O	22.5792 MHz XTAL oscillator output
6	X22IN	I	22.5792 MHz XTAL oscillator input
7	VDD2		positive supply (clock oscillators)
8	VSS2		supply ground (clock oscillators)
9	X24OUT	O	24.576 MHz XTAL oscillator output
10	X24IN	I	24.576 MHz XTAL oscillator input
11	CLK24	O	24.576 MHz buffered clock output
12	STANDBY	I	device inactive
13	RESET	I	device reset
14	L3DATA	I/O	L3 interface serial data
15	L3CLK	I	L3 interface bit clock
16	L3MODE	I	L3 interface mode control
17	LTCNT0	I	LT compatible interface mode control
18	LTCNT1	I	LT compatible interface mode control
19	TEST0	I	test mode select
20	TEST1	I	test mode select
21	URDA	I	unreliable data from drive processing
22	SBDIR	I	sub-band data direction
23	SBDA	I/O	sub-band serial data
24	SBCL	I/O	sub-band bit clock
25	SBWS	I/O	sub-band word select
26	SBEF	I	sub-band error flag from drive processing
27	VSS1		supply ground (logic)
28	VDD1		positive supply (logic)
29	IECOP	O	IEC958 digital audio output
30	DEEMDAC	O	DAC control or general purpose output
31	ATTDAC	O	DAC control or general purpose output
32	MUTEDAC	O	DAC control or general purpose output
33	SDA2	O	baseband serial data output to DAC
34	SDA1	I/O	baseband serial data to/from DAIO and ADC
35	SCL	I/O	baseband bit clock
36	SWS	I/O	baseband word select
37	X256	I	master audio clock input from external source
38	FS256	O	master audio clock at 256 × sample frequency
39	VDD3		positive supply (FS25/6 pin)
40	VSS3		supply ground (FS25/6 pin)
41	FDIR	O	PASC mode encode/diecode
42	SYNCDAI	O	settings synchronisation for DAIO
43	FSYNC	O	sub-band 0 sample synchronisation
44	FDAO	O	filtered serial data output (to ADAS)

• Q601 SAA2013 ADAS

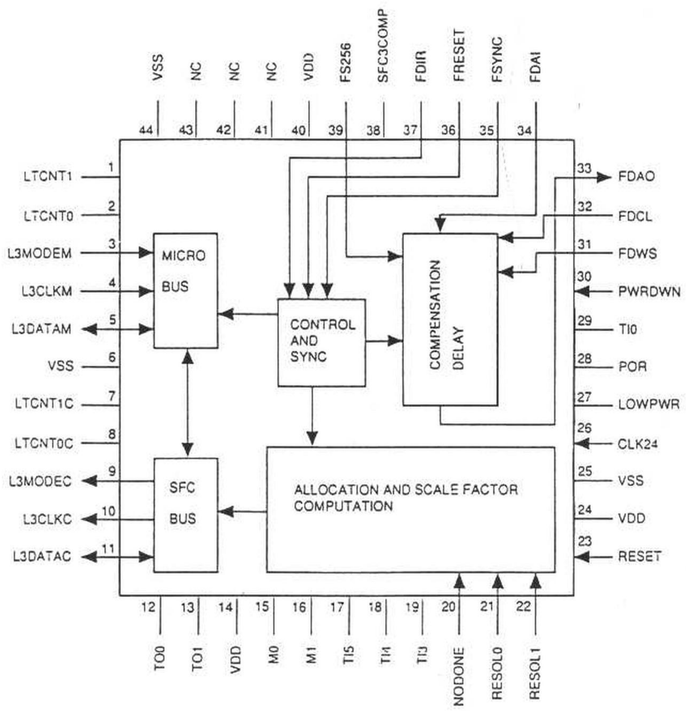

Pin	Name	I/O	Function	Notes
1	LTCNT1	I	ADAS2 (SAA2012) interface mode control	(1)
2	LTCNT0	I	ADAS2 (SAA2012) interface mode control	(1)
3	L3MODEM	I	microcontroller interface mode	
4	L3CLKM	I	microcontroller interface clock	
5	L3DATAM	I/O	microcontroller interface data	(2)
6	VSS		supply ground	
7	LTCNT1C	O	SAA2002 SFC interface mode control	(1)
8	LTCNT0C	O	SAA2002 SFC interface mode control	(1)
9	L3MODEC	O	codec interface mode	
10	L3CLKC	O	codec interface clock	
11	L3DATAC	I/O	codec interface data	(2)
12	TO0	O	(test output)	
13	TO1	O	(test output)	
14	VDD		positive supply	
15	M0	I	(test mode input) connect to VDD	
16	M1	I	(test mode input) connect to VDD	
17	TI5	I	(test input) connect to VSS	
18	TI4	I	(test input) connect to VSS	
19	TI3	I	(test input) connect to VSS	
20	NODONE	I	No done state selection	
21	RESOL0	I	resolution selection 0	
22	RESOL1	I	resolution selection 1	
23	RESET	I	active high reset input	
24	VDD		positive supply	
25	VSS		supply ground	
26	CLK24	I	24.576 MHz clock input	
27	LOWPWR	I	Low power playback select	(3)
28	POR	I	Power On Reset	(3)
29	TI0	I	(test input) connect to VSS	
30	PWRDWN	I	power down input	
31	FDWS	I	word select filtered-I2S (F-I2S) bus	
32	FDCL	I	bit clock F-I2S bus	
33	FDAO	I/O	output data F-I2S bus	(2)
34	FDAI	I/O	input data F-I2S bus	(2)
35	FSYNC	I	subband synchronisation on F-I2S bus	
36	FRESET	I	reset signal from codec	
37	FDIR	I	F-I2S bus direction	
38	SFC3COMP	I	SFC3 (SAA2003) compatibility mode	
39	FS256	I	system clock, 256 × sample frequency	
40	VDD		positive supply	
41	NC		(not connected)	
42	NC		(not connected)	
43	NC		(not connected)	
44	VSS		supply ground	

• Q701 BA1106FS DOLBY

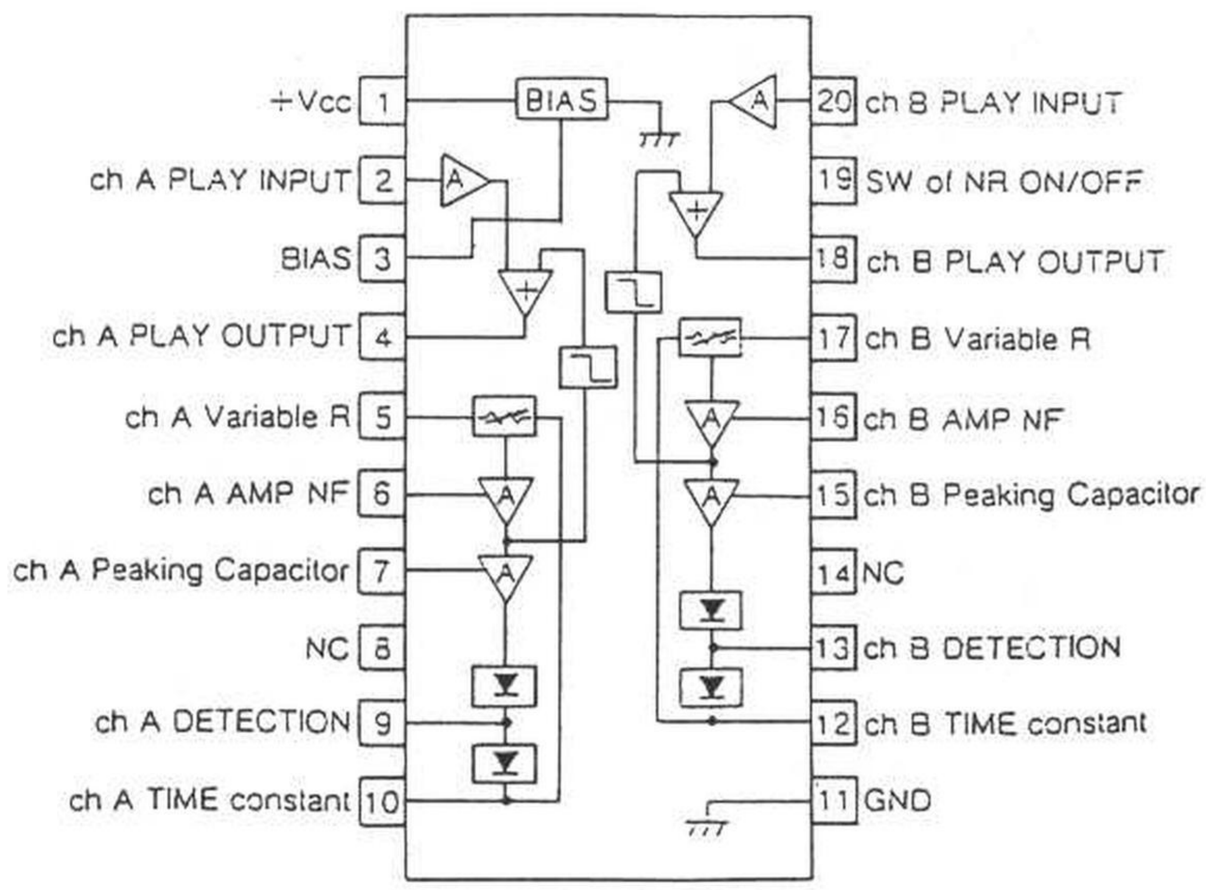

• Q801 MB3775 DC-DC CONVERTER

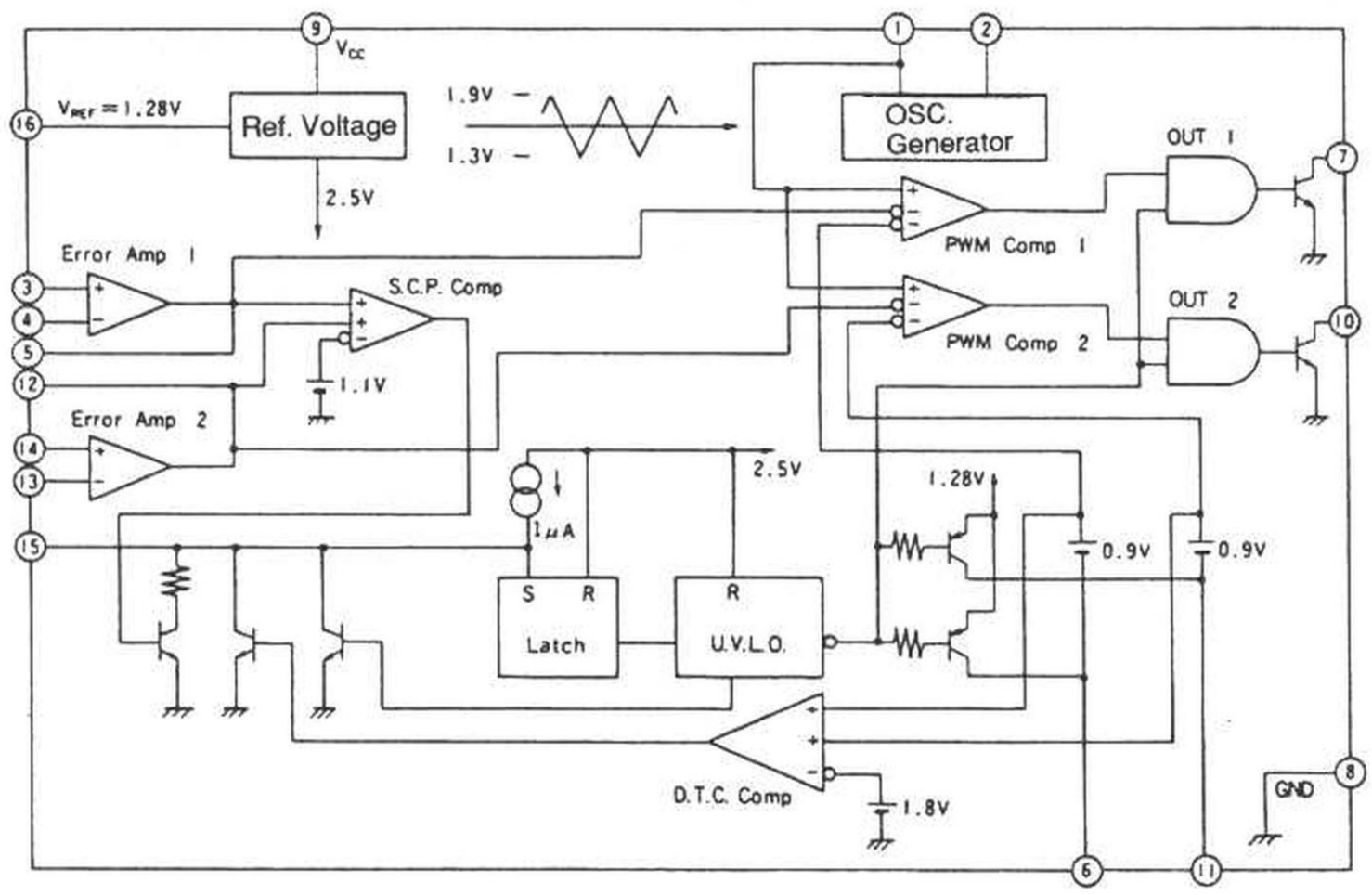

◇ SET EXPLODED VIEW AND PARTS LIST

001B	4822 443 41406	TOP CASE KIT
010B	4822 450 62266	LCD WINDOW
011B	4822 410 63301	OPERATING BUTTON
012B	4822 411 61984	REC KNOB
014B	4822 492 33462	SPRING
017B	4822 381 11533	LENS
021B	4822 443 64211	RETAINER, LCD MOLD COVER
022B	4822 502 30753	SCREW 1.4X2.5
023B	4822 502 30753	SCREW 1.4X2.5
026B	4822 492 71573	CASSETE GUIDE SPRING (R)
027B	4822 492 71574	CASSETE GUIDE SPRING (L)
028B	4822 502 21516	SCREW 1.4X2.5
030B	4822 502 21516	SCREW 1.4X2.5
001G	4822 403 71118	ARM ASS'Y
010G	4822 502 21421	SCREW 1.4X2
011G	4822 502 21428	SCREW 1.4X2
015G	4822 502 21517	SCREW 1.4X1.5
020G	4822 464 51044	CENTER FRAME KIT
030G	4822 411 61982	SLIDE KNOB
031G	4822 411 61983	OPEN KNOB
035G	4822 403 71121	LOCK LEVER ASS'Y
038G	4822 492 52408	SPRING, LOCK HOOK
040G	4822 502 30753	SCREW 1.4X2.5
043G	4822 532 52597	WASHER
050G	4822 403 71119	FRONT BRACKET
052G	4822 502 21516	SCREW 1.4X2.5
055G	4822 502 21516	SCREW 1.4X2.5
061G	4822 502 21516	SCREW 1.4X2.5
062G	4822 502 21518	SCREW 1.4X3.5
065G	4822 502 21516	SCREW 1.4X2.5
070G	4822 492 71576	BATTERY CONTACTOR
080G	4822 464 51043	REAR FRAME
081G	4822 502 21516	SCREW METAL 1.4X2.5
101G	4822 443 51261	BOTTOM CASE [/00]
101G	4822 443 51262	BOTTOM CASE [/01]
101G	4822 443 51259	BOTTOM CASE [/05]
101G	4822 443 51263	BOTTOM CASE [/10]
101G	4822 443 51258	BOTTOM CASE [BK01]
103G	4822 462 42119	LEG
110G	4822 502 21516	SCREW 1.4X2.5
115G	4822 502 21516	SCREW 1.4X2.5
120G	4822 443 64215	BATTERY LID
J101	4822 265 51376	JACK, 26P
J102	4822 265 51376	JACK, 26P
J103	4822 265 61292	JACK, 36P
J301	4822 265 20671	JACK, (LINE MIC DIG. IN)
J401	4822 265 20669	JACK, (LINE DIG. OUTPUT)
J801	4822 267 31789	JACK, DC IN
J802	4822 265 31064	JACK
JH01	4822 267 31787	JACK, HEADPHONES OUT
JU01	4822 265 61292	JACK, 36P
JU02	4822 265 41408	JACK, 17P
KD01	4822 130 91371	LCD KIT
RH01	4822 101 30847	VARIABLE, VR 20KΩ (A)X2
R326	4822 101 30847	VARIABLE, VR 20KΩ (A)X2
SH01	4822 277 21749	SLIDE SWITCH (DBB)
SM03	4822 271 30848	MINI SWITCH
SU01	4822 277 21752	SLIDE SWITCH
SU02	4822 276 13531	PUSH SWITCH
SU21	4822 277 21748	SLIDE SWITCH (REV MODE)
SU22	4822 277 21748	SLIDE SWITCH (HOLD)
S301	4822 277 21749	SLIDE SWITCH (INPUT SEL.)
S302	4822 277 21748	SLIDE SWITCH (ALC)
S701	4822 277 21748	SLIDE SWITCH (DOLBY)
WU01	4822 466 10662	FLEXIBLE P.C.B.
WU02	4822 320 50347	FLEXIBLE P.C.B.

PACKAGING

001T	4822 736 22088	USER MANUAL DCC 170 [/00/01/05/10]
001T	4822 736 22087	USER MANUAL DCC 170 [BK01]
001Z		CARRYING CASE
A071	4822 219 82697	AC.ADAPTOR SBS6619/30 [/00]
A071	4822 219 82701	AC.ADAPTOR SBC6619/31 [/01]
A071	4822 219 82698	AC.ADAPTOR SBC6619/35 [/05]
A071	4822 219 82699	AC.ADAPTOR SBC6619/40 [/10]
A071	4822 219 82696	AC.ADAPTOR SBC6619/47 [BK01]
A072	4822 242 50083	HEADPHONES IN EAR TYPE [/00/01/05/10]
A072	4822 242 50084	HEADPHONES HEAD BAND TYPE [BK01]
B071	4822 138 10555	BATTERY PACK SBC6434 [/00/01/05/10]
B071	4822 138 10554	BATTERY PACK SBC6434 [BK01]
J071	4822 267 31647	JACK, PLUG ADAPTOR [/01]
T071	4822 218 30763	UNIT K, REMOTE CONTROL
W071	4822 321 21602	CONNECTIVE CORD, AUDIO CABLE
W072	4822 321 62513	CONNECTIVE CORD, COAXIAL CABLE

● PACKAGING

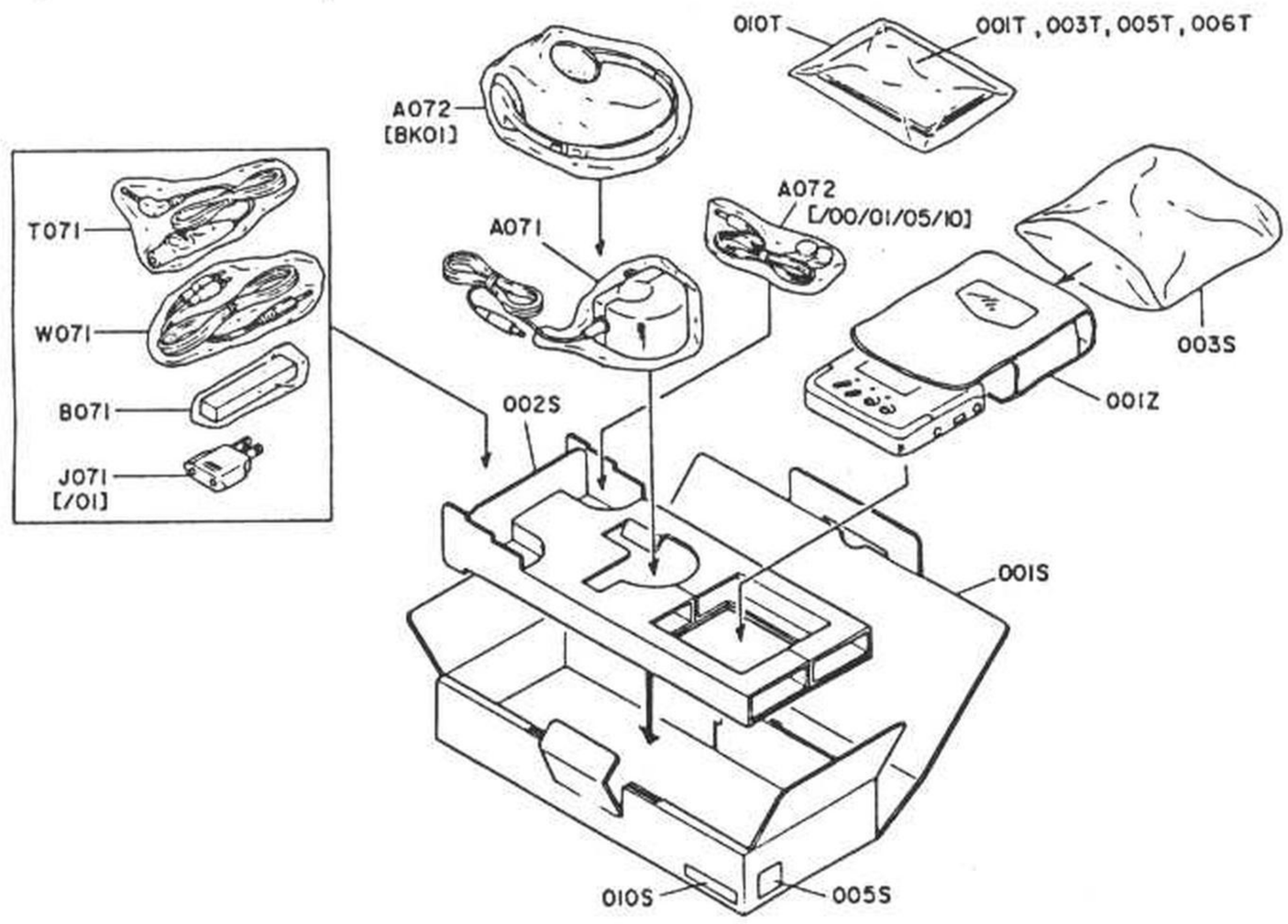

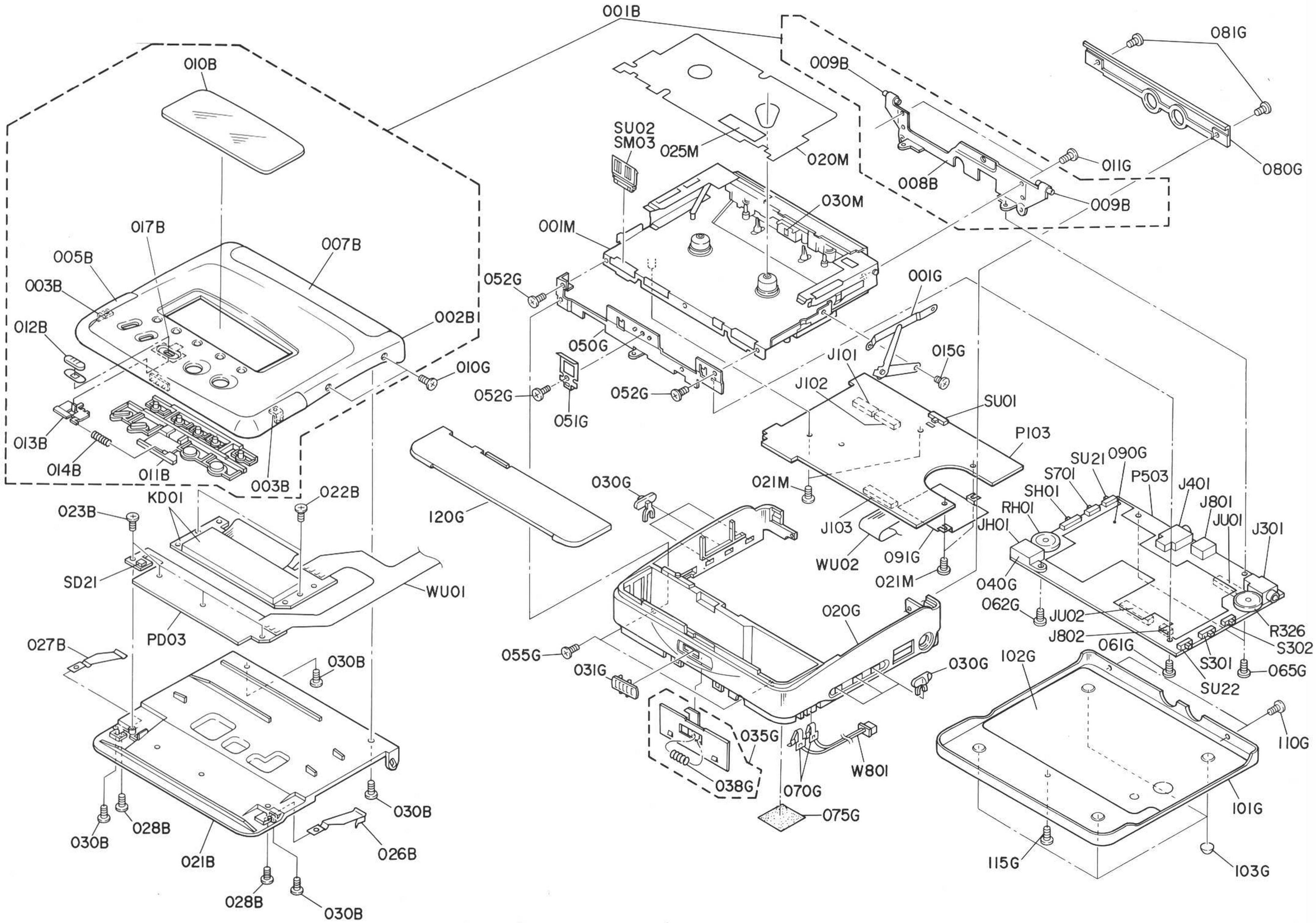
001B
010B
009B
081G
SU02
SM03
025M
020M
011G
080G
008B
009B
030M
017B
007B
001M
005B
003B
052G
001G
002B
012B
050G
015G
010G
J101
052G
052G
J102
SU01
051G
013B
P103
014B
011B
003B
022B
SU21
090G
S70I
P503
J401
030G
021M
SH01
J801
KD01
RH01
JU01
023B
120G
J103
JH01
J301
WU02
091G
SD21
WU01
021M
040G
062G
JU02
020G
R326
PD03
J802
S302
027B
061G
S301
030B
055G
031G
030G
102G
065G
SU22
035G
W801
110G
038G
070G
030B
075G
101G
028B
030B
026B
021B
115G
103G
028B
030B

◇ MECHANISM EXPLODED VIEW AND PARTS LIST

	FWD & REV mode
Wow and flutter	0.3% (WRMS) with ACC
Pressure of pinch roller	250 ± 20 g
Take-up tension	More than 80 g
Playback torque	20^{+10}_{-5} g·cm
FF/REW torque	More than 80 g·cm

The parts enclosed in the dotted boxes are supplied as a block assembly. Therefore, they are not supplied separately except parts indicated with Ref. No.

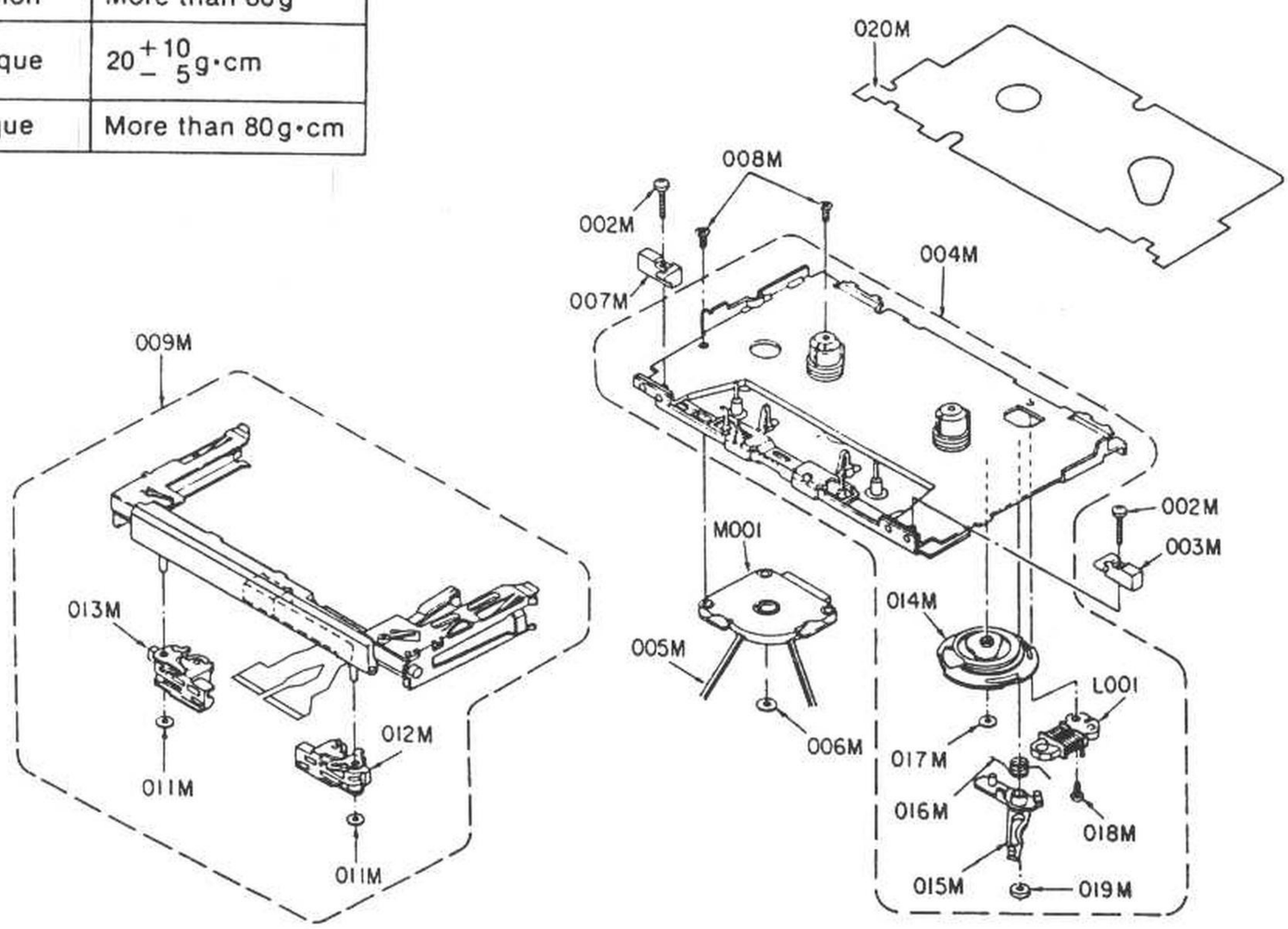

002M	4822 502 21432	SCREW M1.4X5
003M	4822 417 11233	SUPPORT, HOLD PIECE R
004M	4822 464 51042	CHASSIS BLOCK UNIT
005M	4822 358 31272	CP BELT
006M	4822 532 52593	WASHER
007M	4822 417 11234	SUPPORT, HOLD PIECE (L)
008M	4822 502 21433	SCREW M1.4X2
009M	4822 691 20946	HEAD BLOCK UNIT
010M	4822 502 21434	SCREW M1.4X3
011M	4822 532 52594	NYRON WASHER
012M	4822 528 81532	P ROLLER ARM R UNIT
013M	4822 528 70834	P ROLLER ARM L UNIT
014M	4822 522 33486	CAN GEAR
015M	4822 403 71117	TRIGGER LEVER
016M	4822 492 42715	SPRING
017M	4822 532 52595	WASHER
018M	4822 502 21446	SCREW
019M	4822 532 52596	WASHER
020M		MECHA ESCUTCHEON
L001	4822 281 50183	SOLENOID COIL
M001	4822 361 21654	D.C.MOTOR

◇ ELECTRICAL PARTS LIST

P103 PCB MECH BOARD

CAPACITORS (ALL CHIPS) 0.001µF=1nF=1000PF

CM01 ∫ CM03	4822 126 11687	CERAMIC	0.1µF	+80%-20%
CM04 ∫ CM06	4822 126 13282	CERAMIC	0.056µF	±10%
CM11	4822 126 12502	CERAMIC	820PF	± 10%
CM12	4822 126 11687	CERAMIC	0.1µF	+80%-20%
CM13	4822 126 13283	CERAMIC	0.082µF	± 10%
CM14	4822 126 11668	CERAMIC	220PF	± 5%
CM15	4822 126 11687	CERAMIC	0.1µF	+80%-20%
CM16	4822 125 60204	CERAMIC	0.027µF	±10% 16V
CM21	4822 124 11431	TANTAL	10µF	10V
CM22	4822 124 41839	TANTAL	10µF	6.3V
CM25	5322 126 11578	CERAMIC	1000PF	± 10%
CM26	4822 125 60204	CERAMIC	0.027µF	± 10% 16V
CM27	4822 126 12495	CERAMIC	1500PF	± 10%
CM28	4822 126 11567	CERAMIC	0.022µF	± 10% 16V
CM29	5322 126 11578	CERAMIC	1000PF	± 10%
CM31	4822 124 11432	TANTAL	100µF	10V
CM32	4822 126 11687	CERAMIC	0.1µF	+80%-20%
CR01	4822 124 11434	TANTAL	2.2µF	6.3V ± 20%
CR03	4822 126 11668	CERAMIC	220PF	± 5%
CR06	4822 124 11434	TANTAL	2.2µF	6.3V ± 20%
CR08	4822 126 11668	CERAMIC	220PF	± 5%
CR21	4822 126 11687	CERAMIC	0.1µF	+80%-20%
CU11	4822 126 11687	CERAMIC	0.1µF	+80%-20%
CU12	4822 126 11687	CERAMIC	0.1µF	+80%-20%
C001	4822 126 11687	CERAMIC	0.1µF	+80%-20%
C002	4822 126 11687	CERAMIC	0.1µF	+80%-20%
C003	4822 126 11659	CERAMIC	3PF	± 0.25PF
C004	4822 126 13284	CERAMIC	0.18 µF	+80%-20% 16V
C007	4822 126 12848	CERAMIC	0.033µF	± 10%
C008	4822 126 11678	CERAMIC	1 µF	+80%-20%
C009	4822 126 11678	CERAMIC	1 µF	+80%-20%
C010 ∫ C012	4822 126 11687	CERAMIC	0.1µF	+80%-20%
C013	4822 122 33788	CERAMIC	82PF	± 5%
C017	4822 122 33788	CERAMIC	82PF	± 5%
C018	4822 126 11687	CERAMIC	0.1µF	+80%-20%
C019	4822 126 11687	CERAMIC	0.1µF	+80%-20%
C020	4822 122 33752	CERAMIC	15PF	± 5%
C101 ∫ C120	4822 124 11428	TANTAL	1µF	6.3V
C121 ∫ C126	5322 126 11583	CERAMIC	0.01µF	± 10%
C131 ∫ C142	5322 126 11583	CERAMIC	0.01µF	± 10%
C143	4822 126 11568	CERAMIC	470PF	± 10%
C146 ∫ C149	4822 124 41839	TANTAL	10µF	6.3V
C150	4822 124 11434	TANTAL	2.2µF	6.3V ± 20%
C151	4822 124 11428	TANTAL	1µF	6.3V
C152	4822 126 11687	CERAMIC	0.1µF	+80%-20%
C156	4822 124 41839	TANTAL	10µF	6.3V
C157	4822 126 11687	CERAMIC	0.1µF	+80%-20%
C158	4822 124 41839	TANTAL	10µF	6.3V
C159	4822 126 11687	CERAMIC	0.1µF	+80%-20%

CAPACITORS (ALL CHIPS)

C160	4822 124 41839	TANTAL	10µF	6.3V
C161	4822 126 11687	CERAMIC	0.1µF	+80%-20%
C162	4822 124 11438	TANTAL	4.7µF	6.3V
C163	4822 126 11687	CERAMIC	0.1µF	+80%-20%
C171	4822 126 11687	CERAMIC	0.1µF	+80%-20% 35V
C172	4822 126 11687	CERAMIC	0.1µF	+80%-20% 35V
C173	4822 126 11679	CERAMIC	0.47µF	+80%-20% 16V
C174	4822 126 11679	CERAMIC	0.47µF	+80%-20% 16V
C175	5322 126 11578	CERAMIC	1000PF	± 10%
C176	5322 126 11578	CERAMIC	1000PF	± 10%
C177	4822 126 12846	CERAMIC	0.012µF	± 10%
C178	4822 126 12846	CERAMIC	0.012µF	± 10%
C179	5322 126 11583	CERAMIC	0.01µF	± 10%
C180	5322 126 11583	CERAMIC	0.01µF	± 10%
C181	4822 126 13302	CERAMIC	8200PF	± 10%
C182	4822 126 13302	CERAMIC	8200PF	± 10%
C187 ∫ C190	5322 126 11578	CERAMIC	1000PF	± 10%
C197	4822 122 33741	CERAMIC	10PF	± 0.5PF
C198	4822 122 33741	CERAMIC	10PF	± 0.5PF
C201 ∫ C206	4822 126 11687	CERAMIC	0.1µF	+80%-20%
C207	4822 124 41839	TANTAL	10µF	6.3V

RESISTORS (ALL CHIPS)

RM01	4822 117 11308	2.2KΩ	± 5% 1/16W
RM02	4822 117 11308	2.2KΩ	± 5% 1/16W
RM03	4822 117 11311	220KΩ	± 5% 1/16W
RM04	4822 117 11325	56KΩ	± 5% 1/16W
RM05	4822 117 11318	390KΩ	± 5% 1/16W
RM06	4822 117 11328	68KΩ	± 5% 1/16W
RM11	4822 117 11301	12KΩ	± 5% 1/16W
RM12	4822 117 11315	33KΩ	± 5% 1/16W
RM13	4822 117 11303	15KΩ	± 5% 1/16W
RM14	4822 117 11297	100KΩ	± 5% 1/16W
RM15	4822 117 11322	47KΩ	± 5% 1/16W
RM16	4822 117 11322	47KΩ	± 5% 1/16W
RM17	4822 117 11302	1.5KΩ	± 5% 1/16W
RM18 ∫ RM20	4822 117 11425	0.56Ω	± 10% 1/4W
RM31	4822 117 11297	100KΩ	± 5% 1/16W
RM41	4822 117 11322	47KΩ	± 5% 1/16W
RM42	4822 117 11322	47KΩ	± 5% 1/16W
RM51	4822 117 11313	33Ω	± 5% 1/16W
RM52	4822 117 11322	47KΩ	± 5% 1/16W
RM53	4822 117 11321	4.7KΩ	± 5% 1/16W
RM54	4822 117 11313	33Ω	± 5% 1/16W
RQ01	4822 117 11296	10KΩ	± 5% 1/16W
RQ02	4822 117 11296	10KΩ	± 5% 1/16W
RQ06	4822 117 11296	10KΩ	± 5% 1/16W
RR01	4822 117 11363	330Ω	± 5% 1/16W
RR02	4822 117 11321	4.7KΩ	± 5% 1/16W
RR03	4822 117 11366	470KΩ	± 5% 1/16W
RR04	4822 117 11311	220KΩ	± 5% 1/16W
RR05	4822 117 11368	680KΩ	± 5% 1/16W
RR11	4822 117 11363	330Ω	± 5% 1/16W
RR12	4822 117 11321	4.7KΩ	± 5% 1/16W
RR13	4822 117 11366	470KΩ	± 5% 1/16W
RR14	4822 117 11311	220KΩ	± 5% 1/16W
RR15	4822 117 11368	680KΩ	± 5% 1/16W
RR16	4822 117 11294	100Ω	± 5% 1/16W

RESISTORS (ALL CHIPS)

RR17	4822 117 11294	100Ω	± 5% 1/16W
RR18	4822 117 11366	470KΩ	± 5% 1/16W
RR19	4822 117 11366	470KΩ	± 5% 1/16W
RU12	4822 117 11309	22KΩ	± 5% 1/16W
RU13	4822 117 11309	22KΩ	± 5% 1/16W
RU14	4822 117 11322	47KΩ	± 5% 1/16W
RU15	4822 117 11309	22KΩ	± 5% 1/16W
RU16	4822 117 11322	47KΩ	± 5% 1/16W
RU17	4822 117 11322	47KΩ	± 5% 1/16W
R001	4822 117 11295	1KΩ	± 5% 1/16W
R002	4822 117 11296	10KΩ	± 5% 1/16W
R003	4822 117 11321	4.7KΩ	± 5% 1/16W
R008	4822 117 11328	68KΩ	± 5% 1/16W
R009	4822 117 11311	220KΩ	± 5% 1/16W
R010	4822 117 11317	39KΩ	± 5% 1/16W
R011	4822 117 11297	100KΩ	± 5% 1/16W
R012	4822 117 11322	47KΩ	± 5% 1/16W
R013	4822 117 11304	150KΩ	± 5% 1/16W
R014	4822 117 11322	47KΩ	± 5% 1/16W
R015	4822 117 11322	47KΩ	± 5% 1/16W
R016	4822 117 11309	22KΩ	± 5% 1/16W
R017	4822 117 11321	4.7KΩ	± 5% 1/16W
R018	4822 117 11296	10KΩ	± 5% 1/16W
R019	4822 117 11321	4.7KΩ	± 5% 1/16W
R021	4822 117 11296	10KΩ	± 5% 1/16W
R022	4822 117 11296	10KΩ	± 5% 1/16W
R023	4822 117 11298	1MΩ	± 5% 1/16W
R024	4822 117 11321	4.7KΩ	± 5% 1/16W
R033	4822 117 11309	22KΩ	± 5% 1/16W
R034	4822 117 11296	10KΩ	± 5% 1/16W
R101 ∫ R103	4822 117 11313	33Ω	± 5% 1/16W
R104	4822 117 11295	1KΩ	± 5% 1/16W
R115	4822 117 11293	10Ω	± 5% 1/16W
R116	4822 117 11293	10Ω	± 5% 1/16W
R117	4822 117 11326	560KΩ	± 5% 1/16W
R118	4822 117 11326	560KΩ	± 5% 1/16W
R119	4822 117 11326	560Ω	± 5% 1/6W
R120	4822 117 11326	560KΩ	± 5% 1/16W
R125	4822 117 11297	100KΩ	± 5% 1/16W
R126	4822 117 11297	100KΩ	± 5% 1/16W
R127	4822 100 12186	10KΩ	POTMETER
R128	4822 100 12186	10KΩ	POTMETER
R131	4822 117 11309	22KΩ	± 5% 1/16W
R132	4822 117 11309	22KΩ	± 5% 1/16W
R135	4822 117 11301	12KΩ	± 5% 1/16W
R136	4822 117 11301	12KΩ	± 5% 1/16W
R137	4822 117 11298	1MΩ	± 5% 1/16W
R138	4822 117 11298	1MΩ	± 5% 1/16W
R139	4822 117 11299	1.2KΩ	± 5% 1/16W
R140	4822 117 11299	1.2KΩ	± 5% 1/16W
R141	4822 117 11323	560Ω	± 5% 1/16W
R142	4822 117 11323	560Ω	± 5% 1/16W
R147	4822 117 11309	22KΩ	± 5% 1/16W
R148	4822 117 11309	22KΩ	± 5% 1/16W
R149	4822 117 11311	220KΩ	± 5% 1/16W
R150	4822 117 11311	220KΩ	± 5% 1/16W
R151	4822 100 12187	2.2KΩ	POTMETER
R152	4822 100 12187	2.2KΩ	POTMETER
R176	4822 117 11296	10KΩ	± 5% 1/16W
R177	4822 117 11296	10KΩ	± 5% 1/16W
R201	4822 117 11311	220KΩ	± 5% 1/16W
R202	4822 117 11297	100KΩ	± 5% 1/16W
R203	4822 117 11297	100KΩ	± 5% 1/16W
R204	4822 117 11311	220KΩ	± 5% 1/16W
R205	4822 117 11304	150KΩ	± 5% 1/16W

RESISTORS (ALL CHIPS)

R206	4822 117 11324	5.6KΩ	± 5% 1/16W
R207	4822 117 11303	15KΩ	± 5% 1/16W
R208	4822 117 11296	10KΩ	± 5% 1/16W
R209	4822 117 11366	470KΩ	± 5% 1/16W
R210	4822 117 11327	6.8KΩ	± 5% 1/16W
R211	4822 100 12191	5KΩ	POTMETER
R212	4822 117 11322	47KΩ	± 5% 1/16W
R215	4822 117 11339	1Ω	± 5% 1/8W

SEMICONDUCTORS

DM01	4822 130 81324	DIODE	1SS302
DM02	4822 130 81324	DIODE	1SS302
D001 ∫ D003	4822 130 81324	DIODE	1SS302
QM01	4822 209 32621	IC, MOTOR DRIVER	NBC5800
QM02	4822 111 92185	DIGITAL TRANSISTOR	RN1603
QM03	4822 130 63609	TRANSISTOR	2SA1588
QM04	4822 111 92185	DIGITAL TRANSISTOR	RN1603
QM11 ∫ QM13	4822 130 42734	TRANSISTOR2SB798	
QR01	4822 209 33557	IC,	MC14069UBDTEL
QR02	4822 130 63399	PHOTO UNIT, REEL SENS	GP2S27
QR03	4822 130 63399	PHOTO UNIT, REEL SENS	GP2S27
QU11	4822 111 92184	DIGITAL TRANSISTOR	RN1303
Q001	4822 209 33572	IC, MOTOR CONTROL	TC9192AF
Q002	4822 209 32984	IC,	TC7SU04F
Q003	4822 209 33563	IC, OP AMP	NJM2115V
Q004	4822 209 33563	IC, OP AMP	NJM2115V
Q005	4822 111 92189	DIGITAL TRANSISTOR	HN1B01F
Q006	4822 209 61747	IC,	TC4S66F
Q007	4822 209 31754	IC,	TC7S86F
Q008	4822 111 92185	DIGITAL TRANSISTOR	RN1603
Q009	4822 111 92184	DIGITAL TRANSISTOR	RN1303
Q010	4822 130 63618	CHIP FET	2SK880 (GR,BL)
Q011	4822 111 92184	DIGITAL TRANSISTOR	RN1303
Q101	4822 209 33558	IC, READ3TDA1380	
Q105	4822 111 92184	DIGITAL TRANSISTOR	RN1303
Q106	4822 111 92184	DIGITAL TRANSISTOR	RN1303
Q116	4822 130 63609	TRANSISTOR	2SA1588 (Y)
Q117	4822 209 33556	IC, V-REGULATOR 3.0V	RN5RG30A
Q118	4822 130 63609	TRANSISTOR	2SA1588 (Y)
Q119	4822 209 33556	IC, V-REGULATOR 3.0V	RN5RG30A
Q201	4822 209 33579	IC, TDA1381 WRITE3	
Q202	4822 111 92184	DIGITAL TRANSISTOR	RN1303

MISCELLANEOS

J101	4822 265 51376	JACK, 26P
J102	4822 265 51376	JACK, 26P
J103	4822 265 61292	JACK, 36P
L101	4822 157 63437	ELJ-FA100J
L102	4822 157 63437	ELJ-FA100J
L201	4822 157 63437	ELJ-FA100J
SM03	4822 271 30848	MINI SWITCH
SU01	4822 277 21752	SLIDE SWITCH
SU02	4822 276 13531	PUSH SWITCH
SU04	4822 276 13531	PUSH SWITCH

P503 PCB MAIN BOARD

CAPACITORS (ALL CHIPS)

CA01	4822 122 32671	TANTAL	0.1µF	35V
CA02				
∫	4822 126 11687	CERAMIC	0.1µF	+80%-20%
CA04				
CA05	4822 126 11668	CERAMIC	220PF	± 5%
CA06	4822 126 12848	CERAMIC	0.033µF	± 10%
CA07	4822 122 32679	TANTAL	0.33µF	35V
CA11				
∫	4822 126 11687	CERAMIC	0.1µF	+80%-20%
CA14				
CA16	4822 124 11438	TANTAL	4.7µF	6.3V
CA17	4822 122 33744	CERAMIC	100PF	± 5%
CA18	4822 126 13303	CERAMIC	1µF	+80%-20%
CA21	4822 124 11438	TANTAL	4.7µF	6.3V
CA26	4822 124 11438	TANTAL	4.7µF	6.3V
CA27	4822 124 11438	TANTAL	4.7µF	6.3V
CC01	4822 126 13303	CERAMIC	1µF	+80%-20%
CC02	4822 126 11678	CERAMIC	1µF	+80%-20%
CC03	4822 126 11678	CERAMIC	1µF	+80%-20%
CH01	4822 126 11678	CERAMIC	1µF	+80%-20%
CH02	4822 126 11678	CERAMIC	1µF	+80%-20%
CH03	4822 124 11435	TANTAL	22µF	6.3V
CH04	4822 126 13283	CERAMIC	0.082µF	± 10% 16V
CH07	5322 126 11578	CERAMIC	1000PF	± 10%
CH08	5322 126 11578	CERAMIC	1000PF	± 10%
CH09	4822 124 11438	TANTAL	4.7µF	6.3V
CH11	4822 124 11431	TANTAL	10µF	10V
CH12	4822 124 11431	TANTAL	10µF	10V
CH13	4822 126 11679	CERAMIC	0.22µF	+80%-20% 16V
CH14	4822 126 13283	CERAMIC	0.082µF	± 10% 16V
CH15	4822 126 11679	CERAMIC	0.22µF	+80%-20% 16V
CH16	4822 124 11435	TANTAL	22µF	6.3V
CH18	4822 124 11438	TANTAL	4.7µF	6.3V
CH19	5322 126 11578	CERAMIC	1000PF	± 10%
CH21	4822 124 11396	TANTAL	220µF	4V
CH22	4822 124 11396	TANTAL	220µF	4V
CH31	4822 126 11687	CERAMIC	0.1µF	+80%-20%
CH41	4822 124 11432	TANTAL	100µF	10V
CH51	5322 126 11583	CERAMIC	0.01µF	± 10%
CH52	5322 126 11583	CERAMIC	0.01µF	± 10%
CH53	4822 126 12516	CERAMIC	3300PF	+80%-20%
CL01	5322 126 11583	CERAMIC	0.01µF	± 10%
CQ01	4822 126 11679	CERAMIC	0.22µF	+80%-20%
CQ02	5322 126 11668	CERAMIC	220PF	± 10%
CQ03	4822 124 11441	TANTAL	0.68µF	35V
CU01	4822 126 11687	CERAMIC	0.1µF	+80%-20%
CU02	4822 124 11435	TANTAL	22µF	6.3V ± 20%
CU21				
∫	4822 126 11678	CERAMIC	1µF	+80%-20%
CU23				
CU24	5322 126 11583	CERAMIC	0.01µF	± 10%
CU26	4822 126 11687	CERAMIC	0.1µF	+80%-20%
CU31	5322 126 11578	CERAMIC	1000PF	± 10%
CU32	5322 126 11578	CERAMIC	1000PF	± 10%
CU33	4822 126 11687	CERAMIC	0.1µF	+80%-20%
CU51	4822 126 11687	CERAMIC	0.1µF	+80%-20%
C301	5322 126 11583	CERAMIC	0.01µF	± 10%
C302	4822 126 13303	CERAMIC	1µF	+80%-20%
C306	4822 124 11436	TANTAL	220µF	6.3V
C311	4822 124 11438	TANTAL	4.7µF	6.3V
C312	4822 124 11438	TANTAL	4.7µF	6.3V
C313	4822 122 33744	CERAMIC	100PF	± 5%
C314	4822 122 33744	CERAMIC	100PF	± 5%
C315	4822 122 33761	CERAMIC	22PF	± 5%

CAPACITORS (ALL CHIPS)

C316	4822 122 33761	CERAMIC	22PF	± 5%
C317	4822 124 41839	TANTAL	10µF	6.3V
C318	4822 124 41839	TANTAL	10µF	6.3V
C319	4822 126 11687	CERAMIC	0.1µF	+80%-20%
C320	4822 126 11687	CERAMIC	0.1µF	+80%-20%
C331				
∫	4822 124 11438	TANTAL	4.7µF	6.3V
C334				
C335	4822 122 33761	CERAMIC	22PF	± 5%
C336	4822 122 33761	CERAMIC	22PF	± 5%
C361				
∫	4822 126 11678	CERAMIC	1µF	+80%-20%
C364				
C371	4822 124 11438	TANTAL	4.7µF	6.3V
C372	4822 124 11438	TANTAL	4.7µF	6.3V
C373	4822 124 11434	TANTAL	2.2µF	6.3V
C374	4822 124 11434	TANTAL	2.2µF	6.3V
C375	4822 124 11438	TANTAL	4.7µF	6.3V
C376	4822 124 11438	TANTAL	4.7µF	6.3V
C381	4822 124 11435	TANTAL	22µF	6.3V ± 20%
C383	4822 126 11678	CERAMIC	1µF	+80%-20%
C384	4822 126 11678	CERAMIC	1µF	+80%-20%
C385				
∫	4822 124 11438	TANTAL	4.7µF	6.3V
C388				
C389	4822 122 33744	CERAMIC	100PF	± 5%
C390	4822 122 33744	CERAMIC	100PF	± 5%
C391	4822 124 11438	TANTAL	4.7µF	6.3V
C392	4822 126 11687	CERAMIC	0.1µF	+80%-20%
C393	4822 126 11679	CERAMIC	0.22µF	+80%-20% 16V
C394	4822 126 11679	CERAMIC	0.22µF	+80%-20% 16V
C401	4822 124 11438	TANTAL	4.7µF	6.3V
C402	4822 126 11687	CERAMIC	0.1µF	+80%-20%
C403	4822 126 11679	CERAMIC	0.22µF	+80%-20% 16V
C404	4822 126 11687	CERAMIC	0.1µF	+80%-20%
C405	4822 126 11687	CERAMIC	0.1µF	+80%-20%
C407	4822 123 30406	MICA	680PF	± 5%
C408	4822 123 30406	MICA	680PF	± 5%
C409	4822 124 11435	TANTAL	22µF	6.3V ± 20%
C410				
∫	4822 124 11438	TANTAL	4.7µF	6.3V
C412				
C413	4822 123 30405	MICA	2700PF	± 5%
C414	4822 123 30405	MICA	2700PF	± 5%
C415	4822 123 30404	MICA	100PF	± 5%
C416	4822 123 30404	MICA	100PF	± 5%
C418	4822 124 11435	TANTAL	22µF	6.3V ± 20%
C419	4822 124 11436	TANTAL	220µF	6.3V
C421	4822 124 11438	TANTAL	4.7µF	6.3V
C422	4822 124 11438	TANTAL	4.7µF	6.3V
C431	4822 124 11441	TANTAL	0.68µF	35V
C441	5322 126 33744	CERAMIC	100P	± 10%
C442	5322 126 33744	CERAMIC	100P	± 10%
C501	4822 122 33788	CERAMIC	82PF	± 5%
C502	4822 126 11687	CERAMIC	0.1µF	+80%-20%
C505				
∫	4822 126 11687	CERAMIC	0.1µF	+80%-20%
C512				
C516	4822 124 11438	TANTAL	4.7µF	1/16W
C521	4822 126 11687	CERAMIC	0.1µF	+80%-20%
C551				
∫	4822 122 33741	CERAMIC	10PF	± 0.5PF
C554				
C555				
∫	4822 126 11687	CERAMIC	0.1µF	+80%-20%
C557				
C561	4822 124 11438	TANTAL	4.7µF	1/16W
C601	4822 126 11687	CERAMIC	0.1µF	+80%-20%

CAPACITORS (ALL CHIPS)

C602	4822 126 11687	CERAMIC	0.1µF	+80%-20%
C603	4822 126 11678	CERAMIC	1µF	+80%-20%
C604	4822 126 11687	CERAMIC	0.1µF	+80%-20%
C605	4822 126 11687	CERAMIC	0.1µF	+80%-20%
C701	4822 126 11678	CERAMIC	1µF	+80%-20%
C702	4822 126 11678	CERAMIC	1µF	+80%-20%
C703	4822 126 12848	CERAMIC	0.033µF	± 10%
C704	4822 126 12848	CERAMIC	0.033µF	± 10%
C705	4822 126 11685	CERAMIC	4700PF	± 10%
C706	4822 126 11685	CERAMIC	4700PF	± 10%
C707	5322 126 11583	CERAMIC	0.01µF	± 10%
C708	5322 126 11583	CERAMIC	0.01µF	± 10%
C709	4822 126 12848	CERAMIC	0.033µF	± 10%
C710	4822 126 12848	CERAMIC	0.033µF	± 10%
C711	4822 126 11687	CERAMIC	0.1µF	+80%-20%
C712	4822 126 11687	CERAMIC	0.1µF	+80%-20%
C713	4822 124 11435	TANTAL	22µF	6.3V
C714	4822 124 11435	TANTAL	22µF	6.3V
C721	4822 126 11579	CERAMIC	3300PF	± 10%
C722	4822 126 11579	CERAMIC	3300PF	± 10%
C801	4822 124 11432	TANTAL	100µF	10V
C802	4822 124 11431	TANTAL	10µF	10V
C803	4822 124 11431	TANTAL	10µF	10V
C804	4822 126 13303	CERAMIC	1µF	+80%-20%
C806	4822 122 33753	CERAMIC	150PF	± 10%
C807 ∿ C809	4822 126 11687	CERAMIC	0.1µF	+80%-20%
C811 ∿ C813	4822 126 11687	CERAMIC	0.1µF	+80%-20%
C816	4822 126 11687	CERAMIC	0.1µF	+80%-20%
C817	4822 124 11433	TANTAL	150µF	10V
C818	4822 124 11431	TANTAL	10µF	10V
C819	4822 122 33753	CERAMIC	150PF	± 5%
C821	4822 122 33753	CERAMIC	150PF	± 5%
C822	4822 124 11436	TANTAL	220µF	6.3V
C823	4822 124 11435	TANTAL	22µF	6.3V
C826	4822 126 11687	CERAMIC	0.1µF	+80%-20%
C827	4822 126 11678	CERAMIC	1µF	+80%-20%

RESISTORS (ALL CHIPS)

RA01	4822 117 11362	270Ω	± 5% 1/16W
RA06	4822 117 11296	10KΩ	± 5% 1/16W
RA07	4822 117 11322	47KΩ	± 5% 1/16W
RA10	4822 117 11296	10KΩ	± 5% 1/16W
RA11	4822 117 11357	150Ω	± 5% 1/16W
RA12	4822 117 11357	150Ω	± 5% 1/16W
RA13	4822 117 11298	1MΩ	± 5% 1/16W
RA15	4822 117 11321	4.7KΩ	± 5% 1/16W
RA16	4822 117 11306	22Ω	± 5% 1/16W
RA17	4822 117 11322	47KΩ	± 5% 1/16W
RA18	4822 117 11294	100Ω	± 5% 1/16W
RA21	4822 117 11306	22Ω	± 5% 1/16W
RA25	4822 117 11322	47KΩ	± 5% 1/16W
RA26	4822 111 91364	3.9KΩ	± 5% 1/10W
RA27	4822 116 82573	22KΩ	± 5% 1/10W
RA28	4822 117 11322	47KΩ	± 5% 1/16W
RA29	4822 117 11321	4.7KΩ	± 5% 1/16W
RA30	4822 117 11296	10KΩ	± 5% 1/16W
RC01	4822 117 11295	1KΩ	± 5% 1/16W
RC02	4822 117 11341	1.5Ω	± 5% 1W
RC03	4822 117 11295	1KΩ	± 5% 1/16W
RC04	4822 117 11294	100Ω	± 5% 1/16W
RC05	4822 117 11321	4.7KΩ	± 5% 1/16W
RC06	4822 117 11304	150KΩ	± 5% 1/16W
RC07	4822 117 11297	100KΩ	± 5% 1/16W
RC08	4822 117 11296	10KΩ	± 5% 1/16W

RESISTORS (ALL CHIPS)

RC09	4822 117 11322	47KΩ	± 5% 1/16W
RC10	4822 117 11321	4.7KΩ	± 5% 1/16W
RC11	4822 117 11309	22KΩ	± 5% 1/16W
RC12	4822 117 11312	27KΩ	± 5% 1/16W
RC13	4822 117 11319	470Ω	± 5% 1/16W
RH01	4822 101 30847	VARIABLE, VR 20KΩ (A)X2	
RH03	4822 117 11303	15KΩ	± 5% 1/16W
RH04	4822 117 11303	15KΩ	± 5% 1/16W
RH05	4822 117 11297	100KΩ	± 5% 1/16W
RH06	4822 117 11297	100KΩ	± 5% 1/16W
RH09	4822 117 11309	22KΩ	± 5% 1/16W
RH10	4822 117 11309	22KΩ	± 5% 1/16W
RH11	4822 117 11327	6.8KΩ	± 5% 1/16W
RH12	4822 117 11324	5.6KΩ	± 5% 1/16W
RH15	4822 117 11295	1KΩ	± 5% 1/16W
RH16	4822 117 11295	1KΩ	± 5% 1/16W
RH17 ∿ RH20	4822 117 11293	10Ω	± 5% 1/16W
RH21	4822 117 11338	4.7Ω	± 5% 1/16W
RH22	4822 117 11338	4.7Ω	± 5% 1/16W
RH25 ∿ RH28	4822 117 11295	1KΩ	± 5% 1/16W
RH31	4822 117 11302	1.5KΩ	± 5% 1/16W
RH32	4822 117 11302	1.5KΩ	± 5% 1/16W
RH41	4822 117 11322	47KΩ	± 5% 1/16W
RH42	4822 117 11321	4.7KΩ	± 5% 1/16W
RL02	4822 117 11294	100Ω	± 5% 1/16W
RL03	4822 117 11322	47KΩ	± 5% 1/16W
RL04	4822 117 11292	0Ω	
RL05	4822 117 11292	0Ω	
RL11	4822 117 11315	33KΩ	± 5% 1/16W
RL12	4822 117 11325	56KΩ	± 5% 1/16W
RL13	4822 117 11301	12KΩ	± 5% 1/16W
RL14	4822 117 11315	33KΩ	± 5% 1/16W
RL15	4822 117 11315	33KΩ	± 5% 1/16W
RL21	4822 117 11322	47KΩ	± 5% 1/16W
RL22	4822 117 11321	4.7KΩ	± 5% 1/16W
RL23	4822 117 11293	10Ω	± 5% 1/16W
RQ01	4822 117 11303	15KΩ	± 5% 1/16W
RQ02	4822 117 11303	15KΩ	± 5% 1/16W
RU01	4822 117 11298	1MΩ	± 5% 1/16W
RU21	4822 117 11298	1MΩ	± 5% 1/16W
RU22	4822 117 11298	1MΩ	± 5% 1/16W
RU23	4822 117 11312	27KΩ	± 5% 1/16W
RU24	4822 117 11297	100KΩ	± 5% 1/16W
RU25	4822 117 11308	2.2KΩ	± 5% 1/16W
RU26	4822 117 11298	1MΩ	± 5% 1/16W
RU27	4822 117 11297	100KΩ	± 5% 1/16W
RU28	4822 117 11297	100KΩ	± 5% 1/16W
RU31	4822 117 11322	47KΩ	± 5% 1/16W
RU32	4822 117 11322	47KΩ	± 5% 1/16W
RU36	4822 117 11323	560Ω	± 5% 1/16W
RU41	4822 117 11322	47KΩ	± 5% 1/16W
RU42	4822 117 11322	47KΩ	± 5% 1/16W
RU51	4822 100 12189	100KΩ	POTMETER
RU52	4822 117 11296	10KΩ	± 5% 1/16W
RU53	4822 117 11309	22KΩ	± 5% 1/16W
R300	4822 117 11309	22KΩ	± 5% 1/16W
R301	4822 117 11297	100KΩ	± 5% 1/16W
R302	4822 117 11297	100KΩ	± 5% 1/16W
R303	4822 117 11309	22KΩ	± 5% 1/16W
R304	4822 117 11297	100KΩ	± 5% 1/16W
R305	4822 117 11297	100KΩ	± 5% 1/16W
R306	4822 117 11317	39KΩ	± 5% 1/16W

RESISTORS (ALL CHIPS)

R307 ∫ R309	4822 117 11322	47KΩ	± 5% 1/16W
R310	4822 117 11297	100KΩ	± 5% 1/16W
R311	4822 117 11303	15KΩ	± 5% 1/16W
R312	4822 117 11303	15KΩ	± 5% 1/16W
R313	4822 117 11308	2.2KΩ	± 5% 1/16W
R314	4822 117 11308	2.2KΩ	± 5% 1/16W
R315	4822 117 11371	8.2KΩ	± 5% 1/16W
R316	4822 117 11371	8.2KΩ	± 5% 1/16W
R317	4822 117 11299	1.2KΩ	± 5% 1/16W
R318	4822 117 11299	1.2KΩ	± 5% 1/16W
R319	4822 117 11305	18KΩ	± 5% 1/16W
R320	4822 117 11305	18KΩ	± 5% 1/16W
R321	4822 117 11311	220KΩ	± 5% 1/16W
R322	4822 117 11311	220KΩ	± 5% 1/16W
R323	4822 117 11315	33KΩ	± 5% 1/16W
R324	4822 117 11315	33KΩ	± 5% 1/16W
R326	4822 101 30847	VARIABLE, VR 20KΩ (A)X2	
R327	4822 117 11311	220KΩ	± 5% 1/16W
R328	4822 117 11311	220KΩ	± 5% 1/16W
R331	4822 117 11322	47KΩ	± 5% 1/16W
R332	4822 117 11322	47KΩ	± 5% 1/16W
R333	4822 117 11367	68Ω	± 5% 1/16W
R334	4822 117 11367	68Ω	± 5% 1/16W
R335 ∫ R338	4822 117 11295	1KΩ	± 5% 1/16W
R339	4822 117 11321	4.7KΩ	± 5% 1/16W
R340	4822 117 11321	4.7KΩ	± 5% 1/16W
R341 ∫ R344	4822 117 11296	10KΩ	± 5% 1/16W
R345	4822 117 11315	33KΩ	± 5% 1/16W
R346	4822 117 11315	33KΩ	± 5% 1/16W
R347	4822 117 11369	820Ω	± 5% 1/16W
R348	4822 117 11369	820Ω	± 5% 1/16W
R349	4822 117 11371	8.2KΩ	± 5% 1/16W
R350	4822 117 11371	8.2KΩ	± 5% 1/16W
R351	4822 117 11303	15KΩ	± 5% 1/16W
R352	4822 117 11303	15KΩ	± 5% 1/16W
R353	4822 117 11305	18KΩ	± 5% 1/16W
R354	4822 117 11305	18KΩ	± 5% 1/16W
R355	4822 117 11295	1KΩ	± 5% 1/16W
R356	4822 117 11295	1KΩ	± 5% 1/16W
R357	4822 117 11297	100KΩ	± 5% 1/16W
R358	4822 117 11296	10KΩ	± 5% 1/16W
R360	4822 117 11292	0Ω	
R361	4822 117 11424	120KΩ	± 5% 1/16W
R362	4822 117 11424	120KΩ	± 5% 1/16W
R363	4822 117 11326	560KΩ	± 5% 1/16W
R364	4822 117 11326	560KΩ	± 5% 1/16W
R365	4822 117 11296	10KΩ	± 5% 1/16W
R366	4822 117 11296	10KΩ	± 5% 1/16W
R367	4822 117 11295	1KΩ	± 5% 1/16W
R368	4822 117 11295	1KΩ	± 5% 1/16W
R369	4822 117 11311	220KΩ	± 5% 1/16W
R371	4822 117 11301	12KΩ	± 5% 1/16W
R372	4822 117 11292	0Ω	
R373	4822 117 10154	10MΩ	± 5% 1/16W
R374	4822 117 11294	100Ω	± 5% 1/16W
R375	4822 117 11322	47KΩ	± 5% 1/16W
R376	4822 117 11298	1MΩ	± 5% 1/16W
R377	4822 117 11294	100Ω	± 5% 1/16W
R378	4822 117 11424	120KΩ	± 5% 1/16W
R379	4822 117 10154	10MΩ	± 5% 1/16W
R381	4822 117 11309	22KΩ	± 5% 1/16W
R382	4822 117 11309	22KΩ	± 5% 1/16W
R385	4822 117 11296	10KΩ	± 5% 1/16W

RESISTORS (ALL CHIPS)

R386	4822 117 11296	10KΩ	± 5% 1/16W
R387	4822 117 11322	47KΩ	± 5% 1/16W
R388	4822 117 11322	47KΩ	± 5% 1/16W
R389	4822 117 11305	18KΩ	± 5% 1/16W
R390	4822 117 11305	18KΩ	± 5% 1/16W
R391	4822 117 11364	3.9KΩ	± 5% 1/16W
R392	4822 117 11364	3.9KΩ	± 5% 1/16W
R393	4822 117 11321	4.7KΩ	± 5% 1/16W
R394	4822 117 11321	4.7KΩ	± 5% 1/16W
R397	4822 117 11309	22KΩ	± 5% 1/16W
R398	4822 117 11309	22KΩ	± 5% 1/16W
R401	4822 117 11312	27KΩ	± 5% 1/16W
R402	4822 117 11322	47KΩ	± 5% 1/16W
R406	4822 117 11296	10KΩ	± 5% 1/16W
R408	4822 111 90892	0Ω	
R409	4822 111 90892	0Ω	
R411	4822 117 11303	15KΩ	± 5% 1/16W
R412	4822 117 11303	15KΩ	± 5% 1/16W
R413	4822 117 11398	680Ω	± 5% 1/16W
R414	4822 117 11398	680Ω	± 5% 1/16W
R415	4822 117 11315	33KΩ	± 5% 1/16W
R416	4822 117 11315	33KΩ	± 5% 1/16W
R417	4822 117 11309	22KΩ	± 5% 1/16W
R418	4822 117 11309	22KΩ	± 5% 1/16W
R419	4822 117 11294	100Ω	± 5% 1/16W
R421	4822 117 11322	47KΩ	± 5% 1/16W
R422	4822 117 11322	47KΩ	± 5% 1/16W
R423 ∫ R426	4822 117 11307	220Ω	± 5% 1/16W
R427 ∫ R430	4822 117 11308	2.2KΩ	± 5% 1/16W
R431	4822 117 11294	100Ω	± 5% 1/16W
R432	4822 117 11294	100Ω	± 5% 1/16W
R441	4822 117 11328	68KΩ	± 5% 1/16W
R442	4822 117 11361	2.2MΩ	± 5%
R443	4822 117 11312	27KΩ	± 5%1/16W
R501	4822 117 11353	120Ω	± 5% 1/16W
R502	4822 117 11315	33KΩ	± 5% 1/16W
R511	4822 117 11308	2.2KΩ	± 5% 1/16W
R512	4822 117 11308	2.2KΩ	± 5% 1/16W
R551	4822 117 11298	1MΩ	± 5% 1/16W
R552	4822 117 11307	220Ω	± 5% 1/16W
R553	4822 117 11298	1MΩ	± 5% 1/16W
R554	4822 117 11307	220Ω	± 5% 1/16W
R556	4822 117 11307	220Ω	± 5% 1/16W
R557	4822 117 11307	220Ω	± 5% 1/16W
R601	4822 117 11304	150KΩ	± 5% 1/16W
R701	4822 117 11322	47KΩ	± 5% 1/16W
R702	4822 117 11322	47KΩ	± 5% 1/16W
R703	4822 117 11314	3.3KΩ	± 5% 1/16W
R704	4822 117 11314	3.3KΩ	± 5% 1/16W
R705	4822 117 11316	330KΩ	± 5% 1/16W
R706	4822 117 11316	330KΩ	± 5% 1/16W
R707	4822 117 11329	820KΩ	± 5% 1/16W
R708	4822 117 11329	820KΩ	± 5% 1/16W
R711	4822 117 11297	100KΩ	± 5% 1/16W
R712	4822 117 11297	100KΩ	± 5% 1/16W
R717	4822 117 11293	10Ω	± 5% 1/16W
R721	4822 117 11321	4.7KΩ	± 5% 1/16W
R722	4822 117 11321	4.7KΩ	± 5% 1/16W
R723	4822 117 11295	1KΩ	± 5% 1/16W
R724	4822 117 11295	1KΩ	± 5% 1/16W
R806	4822 117 11301	12KΩ	± 5% 1/16W
R807	4822 116 82735	7.5KΩ	± 1% 1/10W
R808	4822 117 11337	4.7KΩ	± 1% 1/10W
R809	4822 117 11315	33KΩ	± 5% 1/16W

RESISTORS (ALL CHIPS)

R810	4822 117 11296	10KΩ	± 5% 1/16W
R811	4822 117 11311	220KΩ	± 5% 1/16W
R812	4822 117 11315	33KΩ	± 5% 1/16W
R813	4822 111 90883	10KΩ	± 1% 1/10W
R814	4822 117 10147	47KΩ	± 1% 1/10W
R815	4822 117 11315	33KΩ	± 5% 1/16W
R816	4822 117 11309	22KΩ	± 5% 1/16W
R817	4822 117 11356	130KΩ	± 1% 1/10W
R818	4822 116 80974	91KΩ	± 1% 1/10W
R821	4822 117 11321	4.7KΩ	± 5% 1/16W
R822	4822 117 11321	4.7KΩ	± 5% 1/16W
R826	4822 117 11294	100Ω	± 5% 1/16W
R827	4822 117 11306	22Ω	± 5% 1/16W
R828	4822 117 11322	47KΩ	± 5% 1/16W
R829	4822 117 11296	10KΩ	± 5% 1/16W
R831	4822 117 11306	22Ω	± 5% 1/16W
R832	4822 117 11294	100Ω	± 5% 1/16W
R835	4822 117 11306	22Ω	± 5% 1/16W
R836	4822 117 11306	22Ω	± 5% 1/16W
R841	4822 117 11309	22KΩ	± 5% 1/16W
R842	4822 117 11297	100KΩ	± 5% 1/16W
R843	4822 117 11322	47KΩ	± 5% 1/16W

SEMICONDUCTORS (ALL CHIPS)

DC01	4822 130 83718	DIODE	EC15QS02L 1.3A
DC02	4822 130 83718	DIODE	EC15QS02L 1.3A
DC03	5322 130 83285	DIODE	1SS322
DH01	4822 130 81324	DIODE	1SS302
DH02	4822 130 81324	DIODE	1SS302
DH05	4822 130 83721	DIODE	1SS300
DH06	4822 130 83721	DIODE	1SS300
DH11	4822 130 83715	DIODE	1SS301
DH12	4822 130 81324	DIODE	1SS302
DU31	4822 130 83715	DIODE	1SS301
DU32	4822 130 83715	DIODE	1SS301
DU36	4822 130 83715	DIODE	1SS301
D311	4822 130 83721	DIODE	1SS300
D312	4822 130 83721	DIODE	1SS300
D316	4822 130 83715	DIODE	1SS301
D331	4822 130 81324	DIODE	1SS302
D332	4822 130 81324	DIODE	1SS302
D333	4822 130 83721	DIODE	1SS300
D361	4822 130 81324	DIODE	1SS302
D362	4822 130 81324	DIODE	1SS302
D371	4822 130 83721	DIODE	1SS300
D372	5322 130 83285	DIODE	1SS322
D391	4822 130 83721	DIODE	1SS300
D421	4822 130 83721	DIODE	1SS300
D422	4822 130 83721	DIODE	1SS300
D441	5322 130 83285	DIODE	1SS322
D601	4822 130 81324	DIODE	1SS302
D806	4822 130 82452	DIODE	MA720
D811	4822 130 82452	DIODE	MA720
D821	4822 130 81324	DIODE	1SS302
QA01	4822 209 33578	IC,	TDA1315
QA02	4822 209 61751	IC,	TC7S32F
QA03	4822 111 92184	DIGITAL TRANSISTOR	RN1303
QA11	4822 111 92192	DIGITAL TRANSISTOR	RN1310
QA12	4822 111 92191	DIGITAL TRANSISTOR	RN2603
QA13	4822 130 61541	TRANSISTOR	2SC4116 (GR)
QA26	4822 130 63609	TRANSISTOR	2SA1588 (Y)
QA27	4822 209 33556	IC, V-REGULATOR 3.0V	RN5RG30A
QA28	4822 130 63609	TRANSISTOR	2SA1588 (Y)
QA29	4822 111 92188	DIGITAL TRANSISTOR	RN4603
QA30	4822 111 92184	DIGITAL TRANSISTOR	RN1303
QC01	4822 130 43954	TRANSISTOR	2SD999

SEMICONDUCTORS (ALL CHIPS)

QC02	4822 130 61541	TRANSISTOR	2SC4116 (GR)
QC03	4822 111 92185	DIGITAL TRANSISTOR	RN1603
QC04	4822 111 92184	DIGITAL TRANSISTOR	RN1303
QC05	4822 130 61554	TRANSISTOR	2SA1586 (Y,G)
QH01	4822 209 32583	IC, HEAD PHON DRIVER	BA3570FS
QH11	4822 111 92187	DIGITAL TRANSISTOR	HN1C03F (B)
QH12	4822 111 92187	DIGITAL TRANSISTOR	HN1C03F (B)
QH16	4822 111 92188	DIGITAL TRANSISTOR	RN4603
QH41	4822 130 63609	TRANSISTOR	2SA1588 (Y)
QH42	4822 111 92184	DIGITAL TRANSISTOR	RN1303
QL01	4822 111 92188	DIGITAL TRANSISTOR	RN4603
QL02	4822 111 92188	DIGITAL TRANSISTOR	RN4603
QQ01	5322 209 32044	IC, LEVEL SENSOR	NJM2072M
QU01	4822 209 33582	µPD78058GC-3B9 (U-COM)	
QU02	4822 209 33571	IC, V-REGULATOR 3.3V	RN5RL33A
QU03	4822 209 33569	IC, V-DETECTOR 2.7V	RN5VL27C
QU21	4822 209 33573	IC, INVERTER	TC7W14F
QU22	4822 209 63557	IC,	TC7S08F
QU23	4822 209 33581	IC,	TC7W08F
QU24	4822 130 63609	TRANSISTOR	2SA1588(Y)
QU36	4822 111 92183	DIGITAL TRANSISTOR	RN2303
QU37	4822 111 92188	DIGITAL TRANSISTOR	RN4603
Q301	4822 111 92195	DIGITAL TRANSISTOR	HN1A01F
Q302	4822 111 92195	DIGITAL TRANSISTOR	HN1A01F
Q306	4822 130 63609	TRANSISTOR	2SA1588 (Y)
Q307	4822 111 92184	DIGITAL TRANSISTOR	RN1303
Q308	4822 111 92192	DIGITAL TRANSISTOR	RN1310
Q311	4822 130 63618	FET	2SK880 (GR,BL)
Q312	4822 130 63618	FET	2SK880 (GR,BL)
Q313	4822 111 92193	DIGITAL TRANSISTOR	RN1610
Q314	4822 111 92193	DIGITAL TRANSISTOR	RN1610
Q316	4822 209 33563	IC, OP-AMP	NJM2115V
Q331	4822 111 92187	DIGITAL TRANSISTOR	HN1C03F (B)
Q332	4822 111 92186	DIGITAL TRANSISTOR	HN1C01F (G)
Q333	4822 130 61541	TRANSISTOR	2SC4116 (GR)
Q334	4822 130 61541	TRANSISTOR	2SC4116 (GR)
Q335	4822 111 92192	DIGITAL TRANSISTOR	RN1310
Q336	4822 111 92192	DIGITAL TRANSISTOR	RN1310
Q338	4822 209 33563	IC, OP AMP	NJM2115V
Q339	4822 130 63618	FET	2SK880 (GR,BL)
Q340	4822 130 63618	FET	2SK880 (GR,BL)
Q361	4822 111 92192	DIGITAL TRANSISTOR	RN1310
Q362	4822 111 92192	DIGITAL TRANSISTOR	RN1310
Q363	4822 130 61541	TRANSISTOR	2SC4116 (GR)
Q364	4822 130 61541	TRANSISTOR	2SC4116 (GR)
Q371	4822 111 92189	DIGITAL TRANSISTOR	HN1B01F
Q372	4822 111 92188	DIGITAL TRANSISTOR	RN4603
Q373	4822 130 61554	TRANSISTOR	2SA1586 (Y,GR)
Q374	4822 111 92192	DIGITAL TRANSISTOR	RN1310
Q381	4822 209 33563	IC, OP AMP	NJM2115V
Q385	4822 111 92187	DIGITAL TRANSISTOR	HN1C03F (B)
Q391	4822 209 33577	IC, LOVAC	TDA1309
Q401	4822 111 92184	DIGITAL TRANSISTOR	RN1303
Q403	4822 209 33563	IC,	NJM2115V
Q406	4822 130 63609	TRANSISTOR	2SA1588 (Y)
Q407	4822 209 33556	IC, V-REGULATOR 3.0V	RN5RG30A
Q421	4822 111 92187	DIGITAL TRANSISTOR	HN1C03F (B)
Q422	4822 111 92187	DIGITAL TRANSISTOR	HN1C03F(B)
Q441	4822 111 92188	DIGITAL TRANSISTOR	RN4603
Q442	4822 111 92187	DIGITAL TRANSISTOR	HN1C03F (G)
Q501	4822 209 33559	IC, DRP	SAA3323
Q502	4822 209 33564	IC, S-RAM	µPD43256BGU-B12
Q551	4822 209 33399	IC, SFC3	SAA2003
Q601	4822 209 33401	IC, ADAS	SAA2013
Q701	4822 209 32622	IC, DOLBY	BA1106FS
Q702	4822 111 92188	DIGITAL TRANSISTOR	RN4603

SEMICONDUCTORS (ALL CHIPS)

Q801	4822 209 33561	IC, DC-DC CONVERTER MB3775
Q802	4822 209 31901	IC, LOGIC TC4S11F
Q803	4822 209 60334	IC, LOGIC TC4S81F
Q804	4822 111 92189	DIGITAL TRANSISTOR HN1B01F
Q805	4822 111 92189	DIGITAL TRANSISTOR HN1B01F
Q806	4822 130 63612	FET 2SK1078
Q807	4822 209 33554	IC, V-REGULATOR 5.0V RN5RG50A
Q808	4822 130 63609	TRANSISTOR 2SA1588 (Y)
Q809	4822 111 92184	DIGITAL TRANSISTOR RN1303
Q816	4822 130 63611	FET 2SJ238

MISCELLANEOS (ALL MSD)

FH51 ~ FH54	4822 156 21729	FERRITE BEAD BK2125HM102
F301	4822 156 21729	FERRITE BEAD BK2125HM102
F302	4822 156 21729	FERRITE BEAD BK2125HM102
F441	4822 156 21729	FERRITE BEAD BK2125HM102
F442	4822 156 21729	FERRITE BEAD BK2125HM102
F443	4822 157 71226	Coil, ZCYS51R5-M3PT
F806	4822 252 51166	FUSE 125V 800MA
JH01	4822 267 31787	JACK, HEADPHONES OUT
JU01	4822 265 61292	JACK, 36P
JU02	4822 265 41408	JACK, 17PIN
J301	4822 265 20671	JACK, (LINE MIC DIG. IN)
J401	4822 265 20669	JACK, (LINE DIG. OUTPUT)
J801	4822 267 31789	JACK, DC IN
J802	4822 265 31064	JACK
LA26	4822 157 63437	ELJ-FA100J
L406	4822 157 63437	ELJ-FA100J
L501	4822 157 63437	ELJ-FA100J
L551	4822 157 63437	ELJ-FA100J
L801	4822 157 71227	CD54-100K
L806	4822 157 71228	CDR74-470K
L816	4822 157 71228	CDR74-470K
L817	4822 157 71227	CD54-100K
SH01	4822 277 21749	SLIDE SWITCH
SU21	4822 277 21748	SLIDE SWITCH (REV MODE)
SU22	4822 277 21748	SLIDE SWITCH (HOLD)
S301	4822 277 21749	SLIDE SWITCH (INPUT SEL.)
S302	4822 277 21748	SLIDE SWITCH (ALC)
S701	4822 277 21748	SLIDE SWITCH (DOLBY)
XU01	4822 242 81792	CERAMIC VIBRATOR KBR3.0MWS
X551	4822 242 81793	OTHER VIBRATORS CS-20 (22.5792MHZ)
X552	4822 242 81794	OTHER VIBRATORS CS20 (24.5760MHZ)

PD03 PCB SWITCH BOARD

SEMICONDUCTORS (ALL CHIPS)

DD01	5322 209 12296	L.E.D BR1101W (REC.IND)

MISCELLANEOS (ALL MSD)

SD01 ~ SD09	4822 276 13525	PUSH SWITCH
SD10	4822 277 21752	SLIDE SWITCH
SD11	4822 276 13526	PUSH SWITCH

CAUTION:
FOR CONTINUED PROTECTION AGAINST RISK OF FIRE, REPLACE ONLY WITH SAME 800mA,125V FUSE. REFER REPLACEMENT TO QUALIFIED SERVICE PERSONNEL.