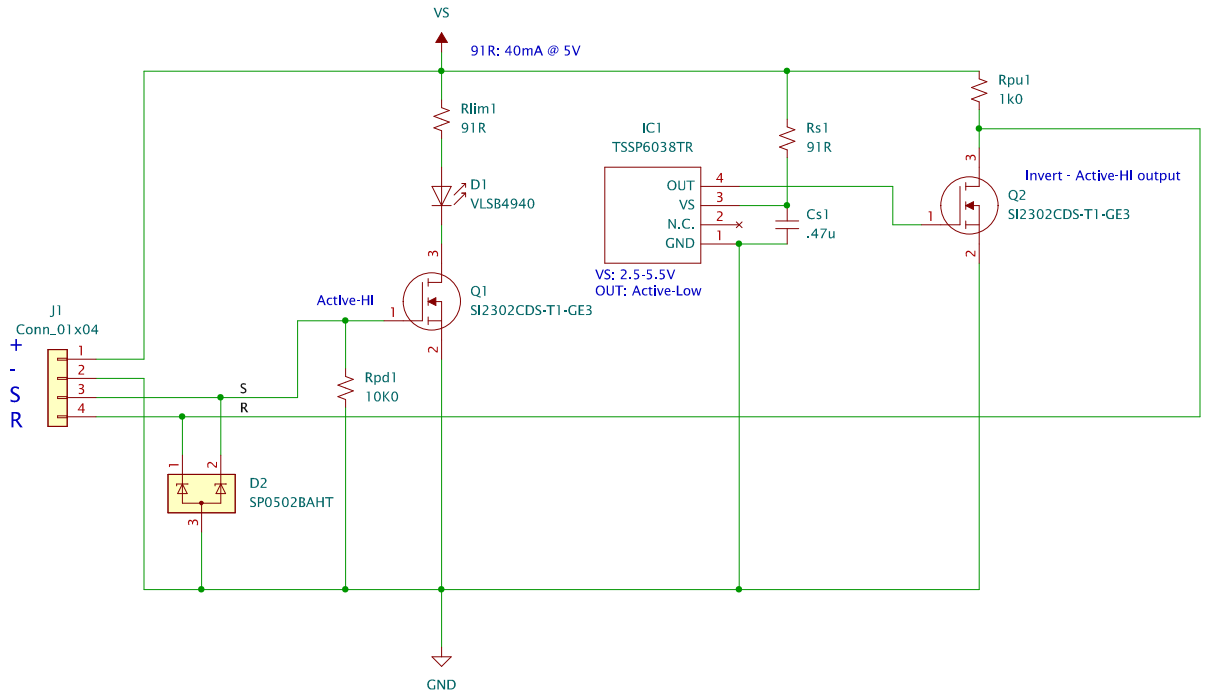

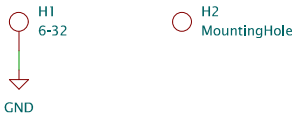

LOGO1
LOGO

DIGITALREP

Title: DR-4: Longer Range IR Sensor

Sheet: /		
File: DR-4D-TSSP6038.kicad_sch		
Size: USLetter	Date: 2023-07-25	Rev: 2
KiCad E.D.A. eeschema 7.0.10		Id: 1/1