2078, 2077, 2074, 2075, 2079- DL

A modulo 7 (MOD-7) counter circuit, known as divide-by-7 counter,A modulo 7 (MOD-7) counter circuit, known as divide-by-7 counter,"mod 7 synchronous counter" or a "modulo-7 counter

Provide one example where shift right operation can be used. Explain parallel-in-parallel-out register in the simplest language.
Example of shift right operation:

Shift right operation is commonly used in digital signal processing to divide a signal's frequency by two. This is achieved by performing a bit-wise shift right operation on the digital signal, effectively dividing the signal's value by two. For example, if a digital signal had a value of 11010110, performing a shift right operation on it would result in a new value of 01101011.

Explanation of parallel-in-parallel-out register:

A parallel-in-parallel-out (PIPO) register is a type of digital circuit that is used to store and manipulate binary data. It consists of a series of flip-flops that can store binary values and control inputs that allow data to be input and output in parallel.

The PIPO register can be thought of as a series of boxes, each capable of storing a single binary value (0 or 1). The register has an input terminal that allows data to be loaded into the register in parallel, and an output terminal that allows data to be read out of the register in parallel. The register also has control inputs that allow individual bits of data to be read or written, and a clock input that controls the timing of data transfers.

To load data into the PIPO register, the data is applied to the input terminals of the register, and the control inputs are set appropriately. The clock signal is then applied, causing the data to be transferred into the register. To read data from the PIPO register, the control inputs are set appropriately, and the clock signal is applied, causing the data to be transferred to the output terminals.

The PIPO register is often used in digital systems where it is necessary to store and manipulate binary data in parallel, rather than in serial. For example, it may be used in a computer's central processing unit (CPU) to store the operands of arithmetic and logical operations.

A parallel-in-parallel-out (PIPO) register is a type of digital circuit that can store multiple digital values simultaneously and can read and write these values in parallel.

In a PIPO register, each bit of the input value is connected to a flip-flop, which is a basic memory element that can store a single binary value. The flip-flops are connected in parallel to create a register that can store multiple values at once.

To write a new value to the PIPO register, the input bits are set to their desired values and then a control signal is applied to the circuit to load these values into the flip-flops simultaneously. The stored values can then be read out from the register in parallel, allowing multiple digital values to be processed at once.

One common application of PIPO registers is in digital signal processing, where they are used to store and manipulate digital signals in parallel. For example, in a digital audio mixer, a PIPO register can be used to store the amplitude values of multiple audio signals simultaneously, allowing them to be mixed and processed in parallel.

Provide one example where shift right operation can be used. in real life with simplest example

One real-life example where shift right operation can be used is in digital image processing. In image processing, images are often represented as matrices of pixel values, where each pixel represents a small area of the image.

One common operation in image processing is to reduce the resolution of an image, which can be achieved by dividing the dimensions of the image by a power of two. For example, if an image has dimensions of 512x512 pixels, we can reduce its resolution by a factor of 2 by performing a bit-wise shift right operation on the image matrix, effectively dividing the dimensions of the image by 2.

To perform this operation, we can use a simple algorithm that involves iterating through each pixel in the image matrix and performing a bit-wise shift right operation on its value. This process effectively averages the pixel values in a 2x2 block, producing a new pixel value that represents the average of the four original pixels.

The resulting image will have half the number of pixels in each dimension, effectively reducing its resolution by a factor of 2. This operation is commonly used in applications where image size and processing speed are important, such as in video compression and streaming applications.

Decimal to Binary Conversion:

To convert a decimal number to binary, we can use the following steps:

1. Multiply the decimal number by 2.
2. Write down the whole number part of the result (0 or 1).
3. If the decimal number was less than 1, stop. Otherwise, take the fractional part of the result and go back to step 1.

In this case, the decimal number is 0.125. So we can apply the steps as follows:

1. 0.125 * 2 = 0.25. Whole number part is 0.
2. 0.25 * 2 = 0.5. Whole number part is 0.
3. 0.5 * 2 = 1.0. Whole number part is 1.

Since the decimal number was less than 1 in step 3, we can stop. The binary representation of 0.125 is 0.001.

Derive the Boolean expression for sum and carry of half adder.

The half adder is a basic digital circuit that adds two single-bit binary numbers (A and B) and produces two outputs: a sum (S) and a carry (C). The Boolean expressions for the sum and carry of a half adder can be derived as follows:

Sum (S) = A XOR B

- The sum output of a half adder is obtained by performing an XOR (exclusive OR) operation on the two input bits A and B. An XOR gate produces an output of 1 if its

inputs are different, and an output of 0 if its inputs are the same. Therefore, the Boolean expression for the sum output S is S = A XOR B.

Carry (C) = A AND B

- The carry output of a half adder is obtained by performing an AND operation on the two input bits A and B. An AND gate produces an output of 1 only if both of its inputs are 1. Therefore, the Boolean expression for the carry output C is C = A AND B.

So, the Boolean expressions for the sum and carry of a half adder are:

- Sum (S) = A XOR B
- Carry (C) = A AND B

These expressions can be used to design and implement a half adder circuit using logic gates.

Derive the Boolean expression for sum and carry of half adder.

The Boolean expressions for the sum and carry outputs of a half adder can be derived as follows:

Sum (S) = A XOR B

- The sum output of a half adder is obtained by performing an XOR (exclusive OR) operation on the two input bits A and B. An XOR gate produces an output of 1 if its inputs are different, and an output of 0 if its inputs are the same. Therefore, the Boolean expression for the sum output S is S = A XOR B.

Carry (C) = A AND B

- The carry output of a half adder is obtained by performing an AND operation on the two input bits A and B. An AND gate produces an output of 1 only if both of its inputs are 1. Therefore, the Boolean expression for the carry output C is C = A AND B.

So, the Boolean expressions for the sum and carry of a half adder are:

- Sum (S) = A XOR B
- Carry (C) = A AND B

These expressions can be used to design and implement a half adder circuit using logic gates.

What are the practical implementations of up counter in five sentences? Explain Binary ripple counter in simplest language.

an asynchronous binary counter, a ripple-through counter, or simply a binary counter.

Here are five practical implementations of an up counter:

1. Digital clocks: up counters are used to keep track of time in digital clocks. Each digit in the display is controlled by a separate up counter that counts up from 0 to 9.
2. Industrial control systems: up counters can be used to monitor and count the number of items produced on an assembly line or the number of cars that pass through a toll booth.
3. Traffic light control systems: up counters can be used to time the duration of each phase in a traffic light cycle.
4. Event counters: up counters can be used to keep track of the number of times a specific event has occurred, such as the number of times a button has been pressed.
5. Scoreboards: up counters can be used to keep track of the score in games and sports.

Now, let's talk about binary ripple counters. A binary ripple counter is a type of digital circuit that counts up from 0 to 2^n-1, where n is the number of flip-flops used in the circuit. The name "ripple" comes from the fact that the output of each flip-flop ripples through to the next flip-flop, causing a ripple effect throughout the circuit.

Here's how a 3-bit binary ripple counter works: it uses three flip-flops, labeled Q0, Q1, and Q2, and each flip-flop outputs either a 0 or a 1. The circuit starts with all three flip-flops in the reset state, which means their outputs are all 0. When a clock pulse is applied to the circuit, the first flip-flop (Q0) toggles from 0 to 1. If Q0 was previously 1, then it toggles back to 0 and Q1 toggles from 0 to 1. If Q1 was previously 1, then it toggles back to 0 and Q2 toggles from 0 to 1. If Q2 was previously 1, then it toggles back to 0 and the circuit resets to 0.

In simpler terms, a binary ripple counter counts up by 1 with each clock pulse, and when it reaches the maximum value (in this case, 7), it resets back to 0.

Explain Binary ripple counter in simplest language.

A binary ripple counter is a type of electronic circuit that counts up in binary, meaning it counts in powers of 2 (i.e. 1, 2, 4, 8, etc.). It does this by using a series of flip-flops that change their state with each clock pulse. Each flip-flop represents a binary digit (or bit) in the counter, with the first flip-flop representing the least significant bit (LSB) and the last flip-flop representing the most significant bit (MSB).

When the counter receives a clock pulse, the LSB flip-flop changes its state (from 0 to 1, or from 1 to 0) based on the current count value. If the LSB was previously 0, it becomes 1, and if it was previously 1, it becomes 0 and the next bit (the second LSB) changes its state. This process continues with each subsequent clock pulse, causing a ripple effect through the counter as each bit changes its state based on the state of the previous bit.

As a result, the counter counts up in binary, with each count value representing a unique combination of binary digits. For example, a 3-bit binary ripple counter can count from 0 (000 in binary) to 7 (111 in binary), after which it resets back to 0. Binary ripple counters are commonly used in digital electronics for applications such as timing, counting, and sequencing.

Explain Binary ripple counter in understandable language covering the main concept

A binary ripple counter is a type of digital circuit that counts in binary, which means it counts in powers of 2 (i.e. 1, 2, 4, 8, etc.). It uses a series of electronic devices called flip-flops, each of which represents a binary digit (or bit) in the counter. The counter starts at 0, with all flip-flops in the "off" state.

When a clock pulse is applied to the circuit, the first flip-flop (the least significant bit) changes its state. If it was previously "off," it turns "on." If it was "on," it turns "off" and the next bit (the second least significant bit) changes its state. This process continues with each subsequent clock pulse, causing a ripple effect through the counter as each bit changes its state based on the state of the previous bit.

As a result, the counter counts up in binary, with each count value representing a unique combination of binary digits. For example, a 3-bit binary ripple counter can count from 0 (000 in binary) to 7 (111 in binary), after which it resets back to 0.

Binary ripple counters are commonly used in digital electronics for applications such as timing, counting, and sequencing. They are relatively simple and inexpensive to construct, making them a popular choice for many different applications.

What are the practical implications of down counter in simplest points?Explain BCD ripple counter in simplest language.

Practical implications of a down counter:

- Countdown applications: A down counter is commonly used in various countdown applications, such as timers, countdown clocks, or countdown displays. It allows you to decrement a value from a specified starting point and trigger specific actions when the count reaches zero. For example, it can be used in kitchen timers to count down cooking time.
- Control systems: Down counters are often used in control systems where a specific sequence of events or actions needs to occur. Each count decrement can trigger a different action, allowing for precise control and sequencing in industrial processes or automation systems.
- Decrementing memory addresses: In computer systems, down counters can be used to decrement memory addresses during specific operations or program execution. This can be useful in cases where a program needs to traverse memory locations in a reverse order or perform specific tasks based on the decreasing memory addresses.
- Event synchronization: Down counters can be used to synchronize events in a system. By setting a specific count value, you can trigger an event or action when the count reaches zero. This can be useful in applications where events need to be coordinated or synchronized in a precise manner.

BCD Ripple Counter:

A BCD (Binary-Coded Decimal) ripple counter is a type of digital counter that counts in the decimal number system using binary-coded decimal representation. In the simplest terms, it is a counter that counts from 0 to 9 in binary, where each digit is represented by a four-bit binary code.BCD RIPPLE COUNTER IS ALSO CALLED AS DECADE COUNTER, MODULO-10 COUNTER, it si asychronous in counter

Here's a simplified explanation of a BCD ripple counter:

- Each digit of the counter can have four possible states represented by four bits (0, 1, 2, 3) in binary. These four bits correspond to the BCD representation of decimal numbers 0 to 9.

- The counter starts at 0000 (0 in BCD) and counts up to 1001 (9 in BCD) before rolling over to 0000 again. Each time the counter reaches 9 (1001), it resets the ones digit to 0 (0000) and increments the tens digit by 1.
- The ripple effect refers to the propagation of carry or borrow signals from one digit to the next when transitioning from 9 to 0. As each digit rolls over from 9 to 0, it triggers the next digit to increment by 1, causing a ripple effect through the counter.
- The BCD ripple counter can be built using flip-flops and combinational logic gates. Each digit has its own flip-flop and decoding logic to determine the appropriate BCD representation for the next count.
- The BCD ripple counter is simple to implement but has limitations in terms of speed and synchronization. Due to the ripple effect, each digit takes a finite amount of time to propagate the carry signal, which can introduce delays and potential synchronization issues in high-speed applications.

In summary, a BCD ripple counter is a digital counter that counts in binary-coded decimal representation, going from 0 to 9 and then rolling over. It is used to represent decimal numbers in digital systems and can be implemented using flip-flops and combinational logic gates.

Countdown applications: A down counter is commonly used in various countdown applications, such as timers, countdown clocks, or countdown displays. It allows you to decrement a value from a specified starting point and trigger specific actions when the count reaches zero. For example, it can be used in kitchen timers to count down cooking time.
Control systems: Down counters are often used in control systems where a specific sequence of events or actions needs to occur. Each count decrement can trigger a different action, allowing for precise control and sequencing in industrial processes or automation systems.
Decrementing memory addresses: In computer systems, down counters can be used to decrement memory addresses during specific operations or program execution. This can be useful in cases where a program needs to traverse memory locations in a reverse order or perform specific tasks based on the decreasing memory addresses.
Event synchronization: Down counters can be used to synchronize events in a system. By setting a specific count value, you can trigger an event or action when the count reaches zero. This can be useful in applications where events need to be coordinated or synchronized in a precise manner. make is short point in sentences.

Sure! Here are the practical implications of a down counter in simpler and shorter points:

1. Countdown applications: Used in timers, countdown clocks, or displays to count down from a set value and trigger actions at zero.
2. Control systems: Enables precise sequencing of events or actions in industrial processes or automation systems.
3. Decrementing memory addresses: Useful for reverse traversal or specific tasks based on decreasing memory addresses in computer systems.
4. Event synchronization: Helps coordinate and synchronize events by triggering actions when the count reaches zero.

Design a combinational circuit with three inputs and one output. The output is 1 when the binary value of the inputs is an odd number.

1. a truth table with all possible combinations of inputs and their corresponding outputs:

A	B	C	Y
0	0	1	1
0	1	0	1
0	1	1	0
1	0	0	1
1	0	1	0
1	1	0	0
1	1	1	1

Sure, here's one way to design a combinational circuit with three inputs (A, B, and C) and one output (Y) that outputs 1 when the binary value of the inputs is an odd number:

1. First, create a truth table with the three inputs and output. There are 2^3 = 8 possible input combinations, but we only need to consider the odd ones. That means we only need to worry about the input values 1, 3, 5, and 7 (in binary).

Input (A,B,C)	**Output (Y)**
001	1
011	1
101	1
111	1
000	0
010	0
100	0

110	0

Differentiate between PLA and PAL.Explain 4-bit magnitude comparator

Here is a table that summarizes the main differences between PLA (Programmable Logic Array) and PAL (Programmable Array Logic) in 5 points:

	PLA	**PAL**
Structure	Programmable AND array and fixed OR array	Programmable AND array and OR array
Implementation	Sum-of-Products	Programmable logic expressions
Flexibility	High	Low
Cost	High	Low
Timing Constraints	More complex	Simpler

1. **Structure:** PLA has a programmable AND array and a fixed OR array, while PAL has both a programmable AND array and a programmable OR array. This makes PAL more flexible in terms of implementing logic functions.
2. **Implementation:** PLA uses the sum-of-products (SOP) method for implementation, while PAL uses programmable logic expressions (PLEs). This means that PAL is better suited for implementing more complex logic functions.
3. **Flexibility:** PLA is more flexible than PAL due to its programmable OR array, which allows for the creation of complex logic functions.

4. **Cost:** PLA is generally more expensive than PAL due to its higher gate count and more complex programming requirements.
5. **Timing Constraints:** PLA has more complex timing constraints than PAL due to its use of a fixed OR array. PAL has simpler timing constraints, making it easier to design and implement circuits with strict timing requirements.

4-bit magnitude comparator. As mentioned earlier, a magnitude comparator is a digital circuit that compares two binary numbers and determines which one is greater than, less than, or equal to the other. A 4-bit magnitude comparator can compare two 4-bit binary numbers and determine their relative magnitude.

A 4-bit magnitude comparator can be implemented using a combination of XOR, AND, and OR gates. The circuit compares the bits of the two input numbers starting from the most significant bit (MSB) and moving toward the least significant bit (LSB). If the two input bits being compared are equal, the circuit moves on to compare the next pair of bits. If the input bits being compared are not equal, the circuit generates a "greater than" or "less than" output depending on which input number has the larger value. If all the bits are equal, the circuit generates an "equal" output.

Here is a simplified block diagram of a 4-bit magnitude comparator:

The compare logic consists of XOR gates and AND gates. The XOR gates compare each bit of the two input numbers, and the AND gates combine the results of the XOR gates to generate the "greater than," "less than," and "equal" outputs. Each bit comparison generates three outputs: one indicating whether the corresponding bit in Input A is greater than the corresponding bit in Input B, one indicating whether the corresponding bit in Input A is less than the corresponding bit in Input B, and one indicating whether the corresponding bits are equal.

The output of the comparator depends on the combination of the bit comparison results. If all the bit comparison results are 0 (i.e., all bits are equal), the output is "Equal." If the most significant bit that is different between the two input numbers is 1 in Input A and 0 in Input B, the output is "Greater." If the most significant bit that is different between the two input numbers is 0 in Input A and 1 in Input B, the output is "Less."

List two major characteristics of digital computer. Represent -6 (negative six) 8 bits in signed magnitude, signed 1's complement and signed 2's complement respectively. Represent decimal number 4673 in a) octal and b) BCD

Two major characteristics of a digital computer are:

1. It operates on digital data, which means it can only work with 0s and 1s.
2. It can perform logical and arithmetic operations on the digital data.

Representation of -6 in different signed formats:

1. Signed magnitude: In signed magnitude representation, the most significant bit (MSB) is used to indicate the sign of the number. 0 means positive and 1 means negative. The remaining 7 bits are used to represent the magnitude of the number. Therefore, the representation of -6 in signed magnitude format would be 10000110.
2. Signed 1's complement: In signed 1's complement representation, to get the negative representation of a number, we take the 1's complement of its positive representation. The 1's complement is obtained by flipping all the bits of the number. Therefore, the positive representation of 6 in 8 bits is 00000110, and the negative representation of -6 in signed 1's complement format would be 11111001.
3. Signed 2's complement: In signed 2's complement representation, to get the negative representation of a number, we take the 2's complement of its positive representation. The 2's complement is obtained by taking the 1's complement of the number and adding 1 to it. Therefore, the positive representation of 6 in 8 bits is 00000110, and the negative representation of -6 in signed 2's complement format would be 11111010.

Representation of decimal number 4673:

a) Octal: To convert decimal number 4673 to octal, we need to repeatedly divide the number by 8 and write down the remainders in reverse order. So, 4673 divided by 8 gives 584 with remainder 1. Then, 584 divided by 8 gives 73 with remainder 0. Continuing the process, 73 divided by 8 gives 9 with remainder 1, and 9 divided by 8 gives 1 with remainder 1. So, the octal representation of 4673 is 11021.

b) BCD: BCD stands for Binary Coded Decimal, which means each decimal digit is represented by its binary equivalent. Therefore, to convert decimal number 4673 to BCD, we need to convert each decimal digit to its 4-bit binary equivalent. So, 4 is represented as 0100, 6 is represented as 0110, 7 is represented as 0111, and 3 is represented as 0011. Therefore, the BCD representation of 4673 is 0100011001110011.

Where is CMOS suitable to use? Define Power dissipation. Show that the positive logic NAND gate is a negative logic NOR gate and vice versa.

CMOS (Complementary Metal-Oxide-Semiconductor) technology is suitable for use in low power applications, such as battery-powered devices and portable electronics. This is

because CMOS logic gates consume very little power when they are in either a high or low state, and they only consume power when they are switching between states. In addition, CMOS technology can be used to create complex digital circuits with many transistors and gates on a single chip, making it useful for integrated circuits and microprocessors.

Power dissipation refers to the amount of power that is lost or dissipated in a circuit. Power dissipation can occur due to a variety of factors, such as resistive losses in wires and components, leakage currents, and switching losses in transistors and gates. In digital circuits, power dissipation can be a significant concern because it can lead to heat buildup and reduced battery life in portable devices. Therefore, designers often use techniques such as low-power design, clock gating, and power gating to minimize power dissipation in digital circuits.

What is the difference between a serial and parallel transfer? Explain how to convert serial data to parallel and parallel data to serial in simple language. What type of register is needed?

Serial and parallel transfer are two different methods of transmitting data between devices. In a serial transfer, data is sent one bit at a time, sequentially, over a single wire or channel. In contrast, in a parallel transfer, multiple bits are sent simultaneously over multiple wires or channels.

Converting serial data to parallel involves taking the individual bits of the serial data and distributing them across multiple parallel lines. This can be done using a shift register, which stores the incoming serial data and then outputs the data in parallel form once all the bits have been received. To convert serial data to parallel, the shift register is clocked once for each bit of data, shifting the bits into the register one at a time. Once all the bits have been received, the parallel data can be read out of the shift register.

Converting parallel data to serial involves taking the bits of data on multiple parallel lines and transmitting them sequentially over a single wire or channel. This can be done using a parallel-to-serial converter, which reads in the parallel data and then outputs it as a serial data

stream. To convert parallel data to serial, the parallel data is first loaded into a shift register. The bits are then shifted out of the shift register one at a time, and sent out as a serial data stream.

The type of register needed for serial-to-parallel and parallel-to-serial conversion is a shift register. A shift register is a type of register that can store multiple bits of data and can shift them out in a sequential manner. There are different types of shift registers, such as parallel-in/serial-out (PISO) and serial-in/parallel-out (SIPO) shift registers, which can be used for serial-to-parallel and parallel-to-serial conversion depending on the direction of the data transfer.

Illustrate the use of Binary ripple counter and BCD ripple counter.using simple language

A binary ripple counter is a type of electronic circuit that counts binary numbers using flip-flops. Each flip-flop represents a bit of the binary number, and the outputs of the flip-flops are connected to form the binary number. The counter works by starting at 0 and then counting up by 1 for each clock pulse. When the maximum count is reached (which depends on the number of bits in the counter), the counter overflows back to 0 and starts counting again. The term "ripple" comes from the fact that the output of each flip-flop ripples over to the next flip-flop when the count changes.

A BCD ripple counter, on the other hand, is a type of electronic circuit that counts in decimal using flip-flops. BCD stands for Binary-Coded Decimal, which means that each digit of the decimal number is represented by a binary code. In a BCD ripple counter, four flip-flops are used to represent each decimal digit, with the outputs of the flip-flops connected to form the BCD code. The counter works by starting at 0 and then counting up by 1 for each clock pulse. When the maximum count is reached (which is typically 9 for each digit), the counter overflows back to 0 and starts counting again.

The main difference between a binary ripple counter and a BCD ripple counter is in the way the numbers are represented. In a binary ripple counter, the numbers are represented in binary form (base 2), while in a BCD ripple counter, the numbers are represented in decimal form (base 10).

Both types of counters can be used in a variety of applications, such as in timing circuits, frequency dividers, and control systems. The choice of which type of counter to use depends on the specific application and the requirements of the system.

Convert the following decimal numbers to the indicated bases.

7562.45 to octal
1938.257 to hexadecimal
175.175 to binary

To convert decimal numbers to different bases, we use repeated division and multiplication by the base.

To convert 7562.45 to octal:

Ignore the decimal point and convert the integer part to octal:
7562 / 8 = 1155 remainder 2
1155 / 8 = 144 remainder 3
144 / 8 = 18 remainder 0
18 / 8 = 2 remainder 2

1. 2 / 8 = 0 remainder 2
   Therefore, the integer part in octal is 220232.

Convert the fractional part to octal:
0.45 * 8 = 3.6, take the integer part 3

2. 0.6 * 8 = 4.8, take the integer part 4
   Therefore, the fractional part in octal is 0.34.

Combine the integer and fractional parts with the radix point to get the final answer:

3. 7562.45 (10) = 220232.34 (8)

To convert 1938.257 to hexadecimal:

Ignore the decimal point and convert the integer part to hexadecimal:
1938 / 16 = 121 remainder 2

1. 121 / 16 = 7 remainder 9
   Therefore, the integer part in hexadecimal is 79.

Convert the fractional part to hexadecimal:
0.257 * 16 = 4.112, take the integer part 4

2. 0.112 * 16 = 1.792, take the integer part 1
   Therefore, the fractional part in hexadecimal is 0.41.

Combine the integer and fractional parts with the radix point to get the final answer:

3. 1938.257 (10) = 79.41 (16)

To convert 175.175 to binary:

Ignore the decimal point and convert the integer part to binary:
175 / 2 = 87 remainder 1
87 / 2 = 43 remainder 1
43 / 2 = 21 remainder 1
21 / 2 = 10 remainder 1
10 / 2 = 5 remainder 0
5 / 2 = 2 remainder 1
2 / 2 = 1 remainder 0

1. 1 / 2 = 0 remainder 1
   Therefore, the integer part in binary is 10101111.

Convert the fractional part to binary:
0.175 * 2 = 0.35, take the integer part 0
0.35 * 2 = 0.7, take the integer part 0
0.7 * 2 = 1.4, take the integer part 1
0.4 * 2 = 0.8, take the integer part 0
0.8 * 2 = 1.6, take the integer part 1
0.6 * 2 = 1.2, take the integer part 1
0.2 * 2 = 0.4, take the integer part 0

2. 0.4 * 2 = 0.8, take the integer part 0
   Therefore, the fractional part in binary is 0.00101101.

Combine the integer and fractional parts with the radix point to get the final answer:

3. 175.175 (10) = 10101111.00101101 (2)

Write Short notes on:

RTL
State Reduction
POS

RTL (Resistor-Transistor Logic) is a digital logic family that uses a combination of resistors and transistors to implement logic functions. In RTL circuits, a resistor is used to pull up the output to a high level, and a transistor is used to pull down the output to a low level. RTL circuits were popular in the early days of digital electronics, but have largely been replaced by more advanced logic families such as CMOS.

State reduction is a technique used in digital logic design to simplify the number of states required to implement a particular function. This technique involves identifying states that are redundant or unnecessary and eliminating them from the design. By reducing the number of states, the complexity of the circuit is reduced, leading to lower power consumption, faster operation, and easier debugging.

POS (Product-of-Sums) is a type of Boolean algebra expression that is used to represent logic functions. A POS expression is formed by taking the product of sums of the inputs, where each sum term represents a specific input combination that results in a logical 0 output. POS expressions are useful for simplifying complex logic functions, and can be implemented using various logic families such as CMOS or TTL. POS expressions are closely related to SOP (Sum-of-Products) expressions, which are formed by taking the sum of products of the inputs.

Write short notes on:

State diagram

De-Morgan's theorem, TTL

State Diagram:
A state diagram is a graphical representation of a finite state machine. It depicts the states, transitions, and actions associated with a system or process. Each state represents a specific condition or state of the system, and the transitions between states depict the changes that occur in the system as it progresses. State diagrams are used in many fields, including engineering, computer science, and control systems, to describe and analyze complex systems.

De Morgan's Theorem:

De Morgan's theorem is a fundamental principle in Boolean algebra that shows the relationship between the complement of a logical operation and the opposite logical operation. The theorem states that the complement of the logical AND operation is equal to the logical OR of the complements of the operands, and the complement of the logical OR operation is equal to the logical AND of the complements of the operands. De Morgan's theorem is often used to simplify Boolean expressions and logic circuits.

TTL:

TTL, or Transistor-Transistor Logic, is a family of digital circuits that use bipolar transistors as the primary switching element. TTL is one of the most widely used logic families and is known for its high speed and low power consumption. TTL circuits are designed to operate with a single power supply voltage and are characterized by their ability to source or sink relatively large currents. TTL is commonly used in microprocessors, memory chips, and other digital circuits. However, due to its relatively high power consumption, it has been largely replaced by other logic families such as CMOS in modern digital systems.

Explain master slave J-K flipflop in simplest language.

A master-slave J-K flip-flop is a type of digital circuit used in electronics to store one bit of information. It is made up of two J-K flip-flops, which are connected in a way that ensures that the output of the first flip-flop only changes when the clock signal is high. This first flip-flop is known as the master and the second is known as the slave.

The inputs to the master J-K flip-flop are the J and K inputs, which determine the state of the flip-flop. When J and K are both high, the output will toggle each time the clock signal goes high. When J is high and K is low, the output will always be set to high. When J is low and K is high, the output will always be set to low. When J and K are both low, the output will remain in its current state.

The outputs of the master flip-flop are connected to the inputs of the slave flip-flop, which ensures that the output of the circuit only changes when the clock signal goes low. This is because the output of the master flip-flop is stable during the low phase of the clock signal, allowing the slave flip-flop to capture the stable output of the master flip-flop and hold it until the next clock cycle.

Overall, the master-slave J-K flip-flop is a useful circuit in digital electronics because it ensures that the output is only changed at the appropriate times, thereby avoiding any glitches or errors in the output.

Explain shift register with parallel load in simple language. Highlight on its practical implications.

A shift register is a type of digital circuit used to store and shift a series of binary values. A shift register with parallel load is a type of shift register that allows data to be loaded into the register in parallel, meaning that all the bits of the data are loaded into the register simultaneously rather than one at a time.

In a shift register with parallel load, the data is loaded into the register using a parallel load input signal. When the parallel load input signal is high, the data is loaded into the register and appears at the output of the register. Once the data is loaded, the shift register can then be shifted using a clock signal, which causes the bits in the register to be shifted to the left or right.

One of the practical applications of a shift register with parallel load is in the field of digital signal processing, where it can be used to store and shift a series of digital samples. For example, in a digital audio recording system, a shift register with parallel load can be used to store a series of digital audio samples, which can then be shifted and processed in various ways to modify the sound.

Another practical application of a shift register with parallel load is in the field of serial communication, where it can be used to convert between serial and parallel data formats. For example, a shift register with parallel load can be used to receive serial data from a device and convert it to parallel data for processing, or to convert parallel data into serial data for transmission to another device.

Overall, the shift register with parallel load is a useful circuit in digital electronics because it allows data to be loaded into the register quickly and efficiently, and can be used in a variety of practical applications in fields such as signal processing and communication.

Explain shift register with parallel load.Highlight on its practical implications.

A shift register is a digital circuit that is used to store and shift a series of binary values. A shift register with parallel load is a type of shift register that allows data to be loaded into the register in parallel, meaning that all the bits of the data are loaded into the register simultaneously, rather than one at a time.

The shift register with parallel load is designed with a set of input lines that allow the parallel loading of the data into the register. This is achieved by providing each bit of the input data with its own input line to the shift register. The data is loaded into the register when a parallel load signal is triggered, which latches the data into the register.

Once the data is loaded, the shift register can then be shifted using a clock signal, which causes the bits in the register to be shifted to the left or right. This can be useful in applications such as data storage and transmission, where serial data needs to be converted to parallel data or vice versa.

One practical application of shift registers with parallel load is in digital signal processing, where they can be used to store and shift a series of digital samples. In digital audio recording, for example, a shift register with parallel load can be used to store a series of digital audio samples, which can then be shifted and processed in various ways to modify the sound.

Shift registers with parallel load can also be used in serial communication to convert between serial and parallel data formats. For example, a shift register with parallel load can be used to receive serial data from a device and convert it to parallel data for processing, or to convert parallel data into serial data for transmission to another device.

Overall, shift registers with parallel load are important circuits in digital electronics because they allow data to be loaded into the register quickly and efficiently, and can be used in a variety of practical applications in fields such as signal processing and communication.

Derive the Boolean expression for sum and carry of half adder in digital logics.

A half adder is a basic digital circuit that adds two single-bit binary numbers and produces a sum bit and a carry bit. The sum bit represents the result of the addition, while the carry bit indicates whether there is a carry-over to the next bit position.

Let's denote the two input bits as A and B, and the output bits as Sum and Carry.

The sum bit (Sum) can be derived using the XOR gate (⊕), which gives an output of 1 when the inputs are different:

Sum = A ⊕ B

The carry bit (Carry) can be obtained using the AND gate (•), which gives an output of 1 only when both inputs are 1:

Carry = A • B

Therefore, the Boolean expressions for the sum (Sum) and carry (Carry) of a half adder are:

Sum = A ⊕ B

Carry = A • B

HALF ADDER AND HALF SUBTRACTOR USING NAND AND NOR GATES

Implementation of Half ADDER using NOR & NAND gates

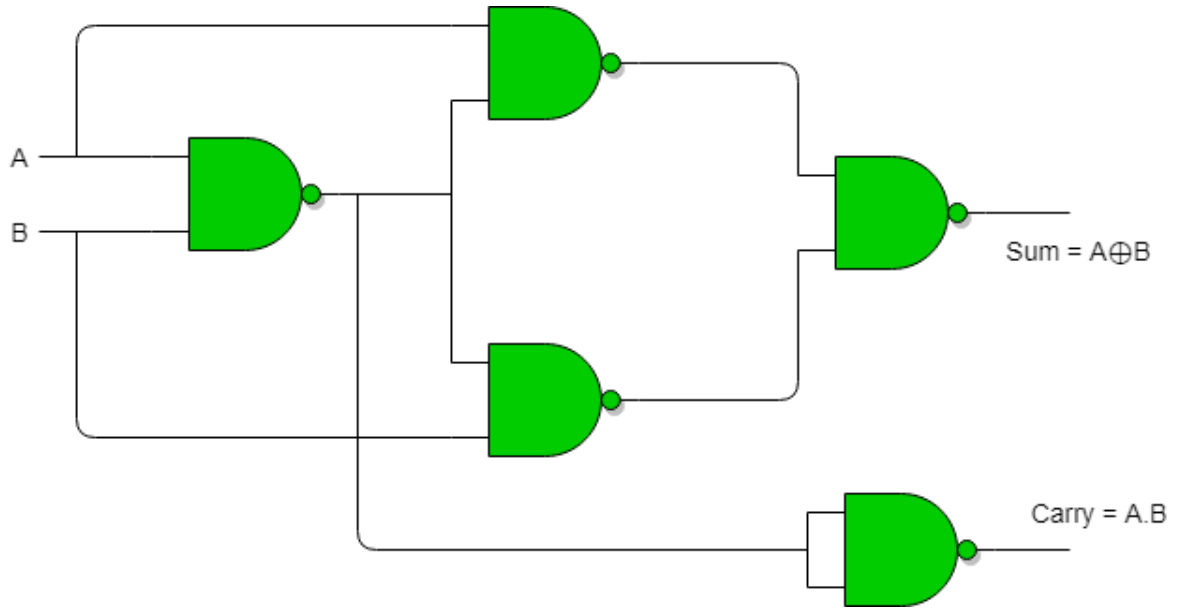

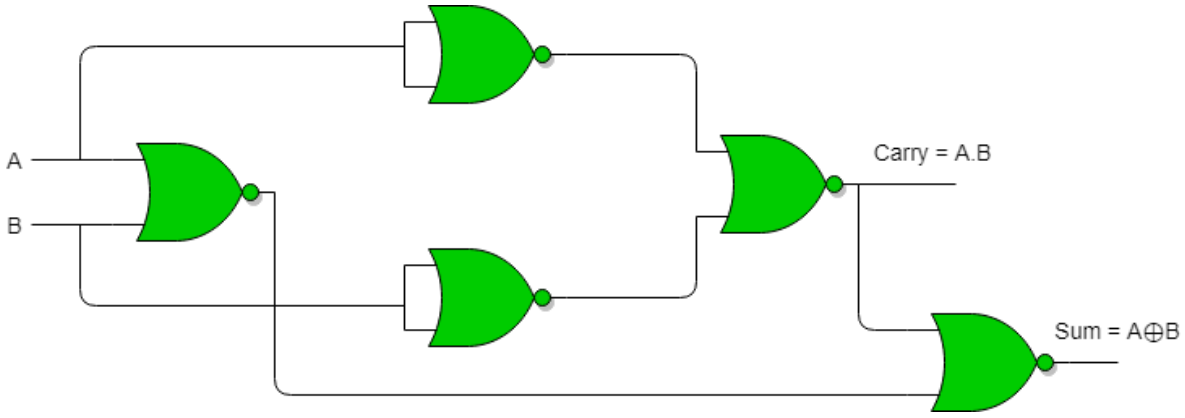

Implementation of Half Subtractor using NOR gates

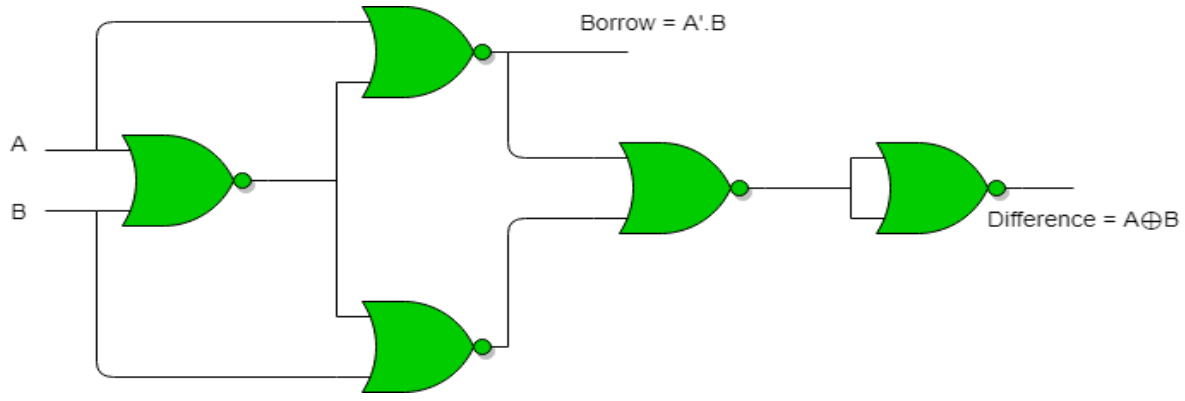

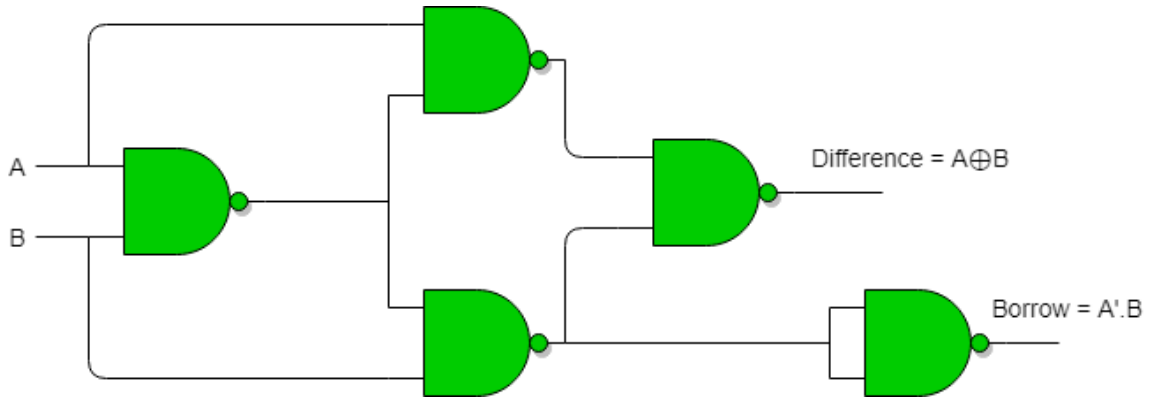

Differentiate between ROM and PLA with points in table . Explain various types of ROM in simplest language.

Sure! Here's a table differentiating between ROM (Read-Only Memory) and PLA (Programmable Logic Array):

	ROM	**PLA**
Definition	Non-volatile memory that stores data	Programmable logic device with combinational logic
Purpose	Stores permanent data or instructions	Implements custom logic functions
Structure	Matrix of diodes or transistors	Array of programmable AND and OR gates
Read Operation	Data is read-only	Data is read-only

Write Operation	Cannot be modified or reprogrammed	Can be programmed or reprogrammed
Flexibility	Fixed logic configuration	Customizable logic configuration
Complexity	Simpler structure	More complex structure
Cost	Lower cost due to fixed configuration	Higher cost due to programmability
Applications	Firmware, microcode, lookup tables	Custom logic design, prototyping

Now, let's explain various types of ROM in simplest language:

1. Mask ROM (MROM): Mask ROM is the most basic type of ROM. It is created during the manufacturing process by permanently storing data using a predetermined pattern of transistors or diodes. The data in a mask ROM is fixed and cannot be changed or reprogrammed.
2. PROM (Programmable Read-Only Memory): PROM allows users to program or write data into the memory once. It comes blank, and a programmer applies a high voltage to selectively burn fuses or alter the electrical characteristics of memory cells. Once programmed, the data remains fixed and cannot be modified.
3. EPROM (Erasable Programmable Read-Only Memory): EPROM can be erased and reprogrammed multiple times. It utilizes a special window through which ultraviolet light can erase the data stored in the memory cells. EPROM requires a separate erasing process before reprogramming.
4. EEPROM (Electrically Erasable Programmable Read-Only Memory): EEPROM can be electrically erased and reprogrammed without the need for ultraviolet light. It can be erased byte-by-byte using electrical signals. EEPROM allows for more convenient and flexible reprogramming compared to EPROM.
5. Flash Memory: Flash memory is a type of EEPROM that allows for block erasure instead of byte-by-byte erasure. It is widely used in various devices like USB drives, memory cards, and solid-state drives (SSDs) due to its non-volatility, high density, and fast read/write speeds.

These types of ROM offer different levels of flexibility and reprogrammability, allowing for various applications ranging from firmware storage to custom logic design.

Write short notes on:
a.Positive Logic
b.I^2L
c.ASCII

a. Positive Logic:
Positive logic is a digital logic system where higher voltage levels represent logical 1 (true) and lower voltage levels represent logical 0 (false). In positive logic, a logic gate or circuit interprets a high voltage level as a true or active state, and a low voltage level as a false or inactive state. This means that a positive voltage, typically the supply voltage, is used to represent logic 1. Positive logic is commonly used in digital systems, where a high voltage level corresponds to a desired state or operation.

b. .I^2L (Integrated Injection Logic):

I^2L, short for Integrated Injection Logic, is a type of bipolar transistor logic family that was popular in the 1970s and 1980s. It is known for its high speed and low power consumption characteristics. .I^2L logic uses a combination of transistors and diodes to implement logic gates and circuits. It operates based on the injection and extraction of charge carriers into and from the base region of bipolar transistors. The main advantages of .I^2L logic are its high speed, low power dissipation, and compatibility with bipolar manufacturing processes.

c. ASCII (American Standard Code for Information Interchange):

ASCII is a widely used character encoding standard in the computer industry. It is used to represent text characters as numerical codes. ASCII assigns a unique 7-bit code to each character, allowing computers to exchange and interpret textual data uniformly. Originally developed for the English language, ASCII has been extended to include characters from other languages as well. For example, ASCII codes 0 to 127 are the standard ASCII set, while codes 128 to 255 are often used for extended ASCII or special characters. ASCII is the basis for communication and storage of text data in many computer systems and programming languages.

Provide one example where shift right operation can be used. Explain parallel-in-parallel-out register in simplest language.

ChatGPT

Shift right operation is commonly used in computer programming and digital logic circuits. One example where the shift right operation can be applied is in dividing a number by a power of 2. Since shifting right by one position is equivalent to dividing by 2, repeatedly shifting right can efficiently divide a number by powers of 2. For example, if we have the number 16 (which is 2^4), shifting it right by 2 positions would give us the result of 4 (which is 2^2).

Now, let's move on to the explanation of a parallel-in-parallel-out register in simple terms.

A register is a digital circuit that stores a group of binary data bits. It can be thought of as a collection of flip-flops that can hold binary values (0s or 1s). The parallel-in-parallel-out register is a specific type of register that allows multiple data bits to be loaded in parallel (at the same time) and retrieved in parallel.

Here's a simplified explanation of how a parallel-in-parallel-out register works:

1. Inputs: The register has several input lines, each corresponding to a data bit. For example, if we have a 4-bit register, it would have four input lines, labeled D0, D1, D2, and D3.
2. Loading: To load data into the register, we apply the desired binary values to the input lines. Each data bit is placed on its corresponding input line. For instance, if we want to load the binary value 1010 into the 4-bit register, we would set D0 to 0, D1 to 1, D2 to 0, and D3 to 1.
3. Storage: Once the input values are applied, we activate a control signal (often called a "clock") to store the data in the register. The control signal synchronizes the storage operation, ensuring that the data is captured in the register.
4. Retrieval: After the data is stored, we can retrieve the stored values from the register. The data is available on the output lines, which correspond to each bit of the stored value. Each output line is labeled Q0, Q1, Q2, and Q3, following the same bit order as the input lines.
5. Parallel operation: The parallel-in-parallel-out register allows us to load and retrieve data simultaneously on all the input and output lines. This means that multiple bits can be processed or transferred at once, which can be advantageous for various applications.

In summary, a parallel-in-parallel-out register is a digital circuit that can store multiple binary values simultaneously and retrieve them in parallel. It provides a way to process or transfer

multiple bits of data at the same time, offering efficiency and convenience in various digital systems and applications.

Explanation of a parallel-in-parallel-out register:

Imagine you have a box with four switches, labeled A, B, C, and D, and each switch can be either on (1) or off (0). This box is called a register, and it can store a group of binary values. It's like having four light switches that you can turn on or off.

Now, let's assume you have another box with four lights, labeled 1, 2, 3, and 4, and each light corresponds to one of the switches in the register. When a switch is on (1), the corresponding light turns on, and when the switch is off (0), the light remains off.

To store a pattern of lights, you can set the switches in the register accordingly. For example, if you want lights 1 and 3 to be on while lights 2 and 4 are off, you would turn on switches A and C while turning off switches B and D.

The parallel-in-parallel-out register allows you to set the switches (input) and read the state of the lights (output) simultaneously. So, you can change the pattern of lights by flipping the switches and instantly see the current pattern by looking at the lights.

In a similar way, a parallel-in-parallel-out register in electronics stores multiple binary values and allows you to load and retrieve them at the same time. It's like having a box with multiple switches that you can set and read simultaneously. This kind of register is used in various digital systems and applications, such as memory storage, data transfer, and parallel processing.

In summary, the shift right operation can be used for tasks like dividing a number by 2 using bit manipulation. A parallel-in-parallel-out register is like a box with switches and lights, where you can set multiple switches (inputs) and instantly see the state of the lights (outputs). It's a useful concept in digital sy

Carry out the following task

Preform 1’s complement subtraction 110101 – 100101
Represent decimal number 0.125 into its binary form

Sure! Let's carry out the tasks one by one:

1's complement subtraction of 110101 - 100101:

1. To perform 1's complement subtraction, we first need to find the 1's complement of the subtrahend (the number being subtracted). Then, we add the minuend (the the

the number from which we subtract) and the 1's complement of the subtrahend. Let's go step by step:

1's complement of 100101:

To find the 1's complement, we simply flip all the bits (0s to 1s and 1s to 0s). So, the 1's complement of 100101 is 011010.

Now, let's add the minuend (110101) and the 1's complement of the subtrahend (011010):

110101 (minuend)

- 011010 (1's complement of subtrahend)

100011

Therefore, the result of the 1's complement subtraction 110101 - 100101 is 100011.

Representing decimal number 0.125 in binary form:

2. To represent the decimal number 0.125 in binary form, we can use the method of multiplying by 2 and extracting the integer part of the result at each step. Here's the process:

0.125 x 2 = 0.25

The integer part is 0, so the first bit is 0.

0.25 x 2 = 0.5

The integer part is 0, so the second bit is 0.

0.5 x 2 = 1.0

The integer part is 1, so the third bit is 1.

Since the result becomes exactly 1.0, we can stop the process. Therefore, the binary representation of the decimal number 0.125 is 0.001.

I hope this helps! Let me know if you have any further questions.

Differentiate between PLA and PAL in points in table. Explain 4-bit magnitude comparator in simplest language.

Certainly! Here's a comparison table highlighting the differences between PLA (Programmable Logic Array) and PAL (Programmable Array Logic):

	PLA (Programmable Logic Array)	**PAL (Programmable Array Logic)**
Structure	Contains an array of AND gates and an array of OR gates	Contains an array of AND gates followed by a fixed OR gate
Programmability	Both AND and OR arrays are programmable	Only AND array is programmable, OR array is fixed
Flexibility	More flexible in terms of implementing different logic functions	Less flexible compared to PLA
Output	Provides both sum-of-products and product-of-sums outputs	Provides only product-of-sums output
Complexity	Higher complexity due to the programmability of both AND and OR arrays	Lower complexity as only the AND array is programmable

Utilization	Typically used for implementing complex logic functions with multiple inputs and outputs	Typically used for simpler logic functions with fewer inputs and outputs

Now, let's explain a 4-bit magnitude comparator in simple terms:

A magnitude comparator is a digital circuit used to compare the relative magnitudes of two binary numbers. A 4-bit magnitude comparator compares two 4-bit binary numbers to determine whether one number is greater than, less than, or equal to the other.

The 4-bit magnitude comparator has two inputs, A and B, which represent the two 4-bit binary numbers to be compared. It also has three output lines: A>B, A<B, and A=B.

Here's how it works:

1. Compare the most significant bits (MSBs) of the two numbers.
    - If the MSB of A is 1 and the MSB of B is 0, then A is greater than B.
    - If the MSB of A is 0 and the MSB of B is 1, then A is less than B.
    - If the MSBs of both A and B are the same, move to the next bit.
2. Compare the next significant bits of A and B.
    - If the next bit of A is 1 and the corresponding bit of B is 0, then A is greater than B.
    - If the next bit of A is 0 and the corresponding bit of B is 1, then A is less than B.
    - If the bits are the same, move to the next bit.
3. Repeat this process for all four bits of A and B, comparing them one by one.
4. Based on the comparisons, the outputs of the 4-bit magnitude comparator are set as follows:
    - The A>B output is true if A is greater than B in magnitude.
    - The A<B output is true if A is less than B in magnitude.
    - The A=B output is true if A is equal to B in magnitude.

The 4-bit magnitude comparator is often used in arithmetic and logical operations to compare numbers and make decisions based on their magnitudes.

I hope this explanation helps you understand the concepts! If you have any further questions, feel free to ask.

Differentiate between PLA and PAL in points in table. Explain 4-bit magnitude comparator in simplest language for student.

Certainly! Here's a comparison table highlighting the differences between PLA (Programmable Logic Array) and PAL (Programmable Array Logic):

	PLA (Programmable Logic Array)	**PAL (Programmable Array Logic)**
Structure	Contains an array of AND gates and an array of OR gates	Contains an array of AND gates followed by a fixed OR gate
Programmability	Both AND and OR arrays are programmable	Only the AND array is programmable, OR array is fixed
Flexibility	More flexible in terms of implementing different logic functions	Less flexible compared to PLA
Output	Provides both sum-of-products and product-of-sums outputs	Provides only product-of-sums output
Complexity	Higher complexity due to the programmability of both AND and OR arrays	Lower complexity as only the AND array is programmable
Utilization	Typically used for implementing complex logic functions with multiple inputs and outputs	Typically used for simpler logic functions with fewer inputs and outputs

Now, let's explain a 4-bit magnitude comparator in simple terms for a student:

A 4-bit magnitude comparator is a digital circuit used to compare the relative sizes of two 4-bit binary numbers. It helps us determine whether one number is greater than, less than, or equal to the other.

Imagine you have two 4-bit binary numbers, let's call them A and B. The magnitude comparator compares the bits of A and B one by one, starting from the most significant bit (the leftmost bit).

Here's how it works:

1. Compare the most significant bits (MSBs) of A and B. If the MSB of A is greater than the MSB of B, it means that A is a larger number. If the MSB of A is less than the MSB of B, it means that B is the larger number. If the MSBs of both A and B are the same, move on to the next bit.
2. Compare the next significant bits of A and B. Repeat the same process as before: if the bit of A is greater than the corresponding bit of B, A is larger. If the bit of A is less than the corresponding bit of B, B is larger. If they are equal, move on to the next bit.
3. Repeat this process for all four bits of A and B, comparing them one by one.
4. Based on the comparisons, the 4-bit magnitude comparator provides three outputs:
    - A>B: This output is true if A is greater than B in magnitude.
    - A<B: This output is true if A is less than B in magnitude.
    - A=B: This output is true if A is equal to B in magnitude.

The 4-bit magnitude comparator helps us make comparisons between binary numbers and make decisions based on their relative sizes. It is commonly used in digital systems and arithmetic operations.

I hope this explanation helps you understand the concept! If you have any further questions, feel free to ask.

Explain the 4-bit magnitude comparator in the simplest language for a 9-year-old kid.

Sure! I'll explain a 4-bit magnitude comparator in a simple way for a 9-year-old kid:

A 4-bit magnitude comparator is like a special machine that helps us compare two sets of numbers. It tells us which set of numbers is bigger or if they are the same.

Imagine you have two sets of 4 numbers each. Let's call them Set A and Set B. Each number in the set can be 0 or 1, just like an on/off switch.

Now, let's compare the numbers in Set A and Set B:

1. Start by looking at the first number in both sets. These are the most important numbers because they are at the front.
2. If the first number in Set A is bigger than the first number in Set B, we can say that Set A is bigger overall. If the first number in Set B is bigger, then Set B is bigger overall. If both numbers are the same, we need to look at the next numbers.
3. Move to the second number in both sets and compare them. If the second number in Set A is bigger than the second number in Set B, then Set A is bigger overall. If the second number in Set B is bigger, then Set B is bigger overall. If both numbers are the same, we move on to the next numbers.
4. Keep repeating this process for all four numbers in both sets, comparing them one by one.
5. At the end, the 4-bit magnitude comparator will give us the answer:
    - If Set A is bigger than Set B in overall magnitude, it will tell us that Set A is bigger.
    - If Set B is bigger than Set A in overall magnitude, it will tell us that Set B is bigger.
    - If both sets are the same, it will tell us that they are equal.

The 4-bit magnitude comparator helps us compare numbers and decide which set of numbers is bigger or if they are the same. It's like a special machine that helps us make comparisons.

Write short notes on

Negative Logic
CMOS
EBCDIC

Negative Logic:
Negative logic is a way of representing logical values where a higher voltage level or logic state is associated with a logical "0" or false, and a lower voltage level or logic state represents a logical "1" or true. In negative logic, the usual relationship between high and low voltage levels is reversed. For example, in negative logic, a logic "0" may be represented by a higher voltage (e.g., 5V) while a logic "1" may be represented by a lower voltage (e.g., 0V). Negative logic is commonly used in some digital systems and circuit implementations.

CMOS:

CMOS stands for Complementary Metal-Oxide-Semiconductor and refers to a type of integrated circuit (IC) technology widely used in modern electronic devices. CMOS technology utilizes complementary pairs of MOSFETs (metal-oxide-semiconductor field-effect transistors) to implement logic gates and other digital circuits. It offers advantages such as low power consumption, high noise immunity, and the ability to integrate both digital and analog circuitry on the same chip. CMOS technology is commonly found in microprocessors, memory chips, and other digital integrated circuits.

EBCDIC:

EBCDIC stands for Extended Binary Coded Decimal Interchange Code. It is a character encoding scheme developed by IBM and used mainly on mainframe computers and IBM midrange systems. EBCDIC is an 8-bit encoding that represents characters as binary numbers. It was designed to encode a wide range of characters, including letters, numbers, symbols, and control characters. EBCDIC differs from the more commonly used ASCII encoding, which is widely used in modern computers and communication systems. Although EBCDIC is less prevalent today, it is still used in some legacy systems and environments where compatibility with older mainframe systems is required.

Simplify the following function and implement them with two level NOR gate circuit, F(w, x, y, z) = wx’ + y’z’ + w’yz’.

To simplify the function F(w, x, y, z) = wx' + y'z' + w'yz', we can use Boolean algebra and logic simplification techniques. Let's simplify the function step by step:

Apply De Morgan's theorem to eliminate the complemented variables:
wx' + y'z' + w'yz'

1. = wx' + y'z' + (w' + y')(w' + z')

Apply the distributive law:
wx' + y'z' + (w' + y')(w' + z')

2. = wx' + y'z' + w'w' + w'z' + y'w' + y'z'

Eliminate the redundant terms:

3. = wx' + y'z' + w'z' + y'w'

Apply the consensus theorem to combine like terms:
= wx' + w'z' + y'w' + y'z'

4. = wx' + w'z' + y'(w' + z')

Now, we have the simplified expression F(w, x, y, z) = wx' + w'z' + y'(w' + z').

Write short notes on:

SIMM
RTL
Parity Checker

1. SIMM (Single Inline Memory Module): SIMM is a type of memory module used in computers to provide additional RAM (Random Access Memory). It is a printed circuit board containing several memory chips that are mounted on a single module. SIMMs were commonly used in older computer systems and were later replaced by DIMMs (Dual Inline Memory Modules). SIMMs come in different form factors, such as 30-pin and 72-pin, depending on the type and generation of the computer.
2. RTL (Register Transfer Level): RTL is a level of abstraction in digital circuit design that represents the transfer of data between registers. It is used to describe the behavior and functionality of a digital circuit by specifying the flow of data between registers and the operations performed on that data. RTL is an important step in the design process and is often represented using a hardware description language (HDL) such as VHDL or Verilog. It helps in verifying and simulating the behavior of a digital circuit before the actual implementation.
3. Parity Checker: A parity checker is a circuit or module used to detect errors in data transmission or storage. It checks the parity of a group of bits to determine if there has been an error during transmission or storage. Parity is a simple form of error detection that adds an additional bit (the parity bit) to a set of data bits. The parity bit is calculated based on the number of 1s in the data bits. The parity checker compares the calculated parity bit with the received parity bit and raises an error flag if they do not match. Parity checkers are commonly used in communication systems and memory modules to ensure data integrity and detect transmission errors.

Convert the following decimal numbers to the indicated bases.

7562.45 to octal
1938.257 to hexadecimal
175.175 to binary

To convert the given decimal numbers to the indicated bases, follow these steps:

1. Convert the whole number part separately.
2. Convert the fractional part separately.
3. Combine the converted parts to get the final result.

Let's convert each number to the indicated bases:

1. Convert 7562.45 to octal:

a) Whole number part:

Divide 7562 by 8 repeatedly to obtain the octal digits:

7562 ÷ 8 = 945 remainder 2
945 ÷ 8 = 118 remainder 1
118 ÷ 8 = 14 remainder 6
14 ÷ 8 = 1 remainder 6

1 ÷ 8 = 0 remainder 1

The octal representation of the whole number part is 1661512.

b) Fractional part:

Multiply 0.45 by 8 repeatedly to obtain the octal digits:

0.45 × 8 = 3.6 (take the whole number part only)

0.6 × 8 = 4.8 (take the whole number part only)

The octal representation of the fractional part is 34.

Therefore, the octal representation of 7562.45 is 1661512.34.

2. Convert 1938.257 to hexadecimal:

a) Whole number part:

Divide 1938 by 16 repeatedly to obtain the hexadecimal digits:

1938 ÷ 16 = 121 remainder 2
121 ÷ 16 = 7 remainder 9

7 ÷ 16 = 0 remainder 7

The hexadecimal representation of the whole number part is 79.

b) Fractional part:

Multiply 0.257 by 16 repeatedly to obtain the hexadecimal digits:

0.257 × 16 = 4.112 (take the whole number part only)

0.112 × 16 = 1.792 (take the whole number part only)

The hexadecimal representation of the fractional part is 41.

Therefore, the hexadecimal representation of 1938.257 is 79.41.

3. Convert 175.175 to binary:

a) Whole number part:

Divide 175 by 2 repeatedly to obtain the binary digits:

175 ÷ 2 = 87 remainder 1
87 ÷ 2 = 43 remainder 1
43 ÷ 2 = 21 remainder 1
21 ÷ 2 = 10 remainder 1
10 ÷ 2 = 5 remainder 0
5 ÷ 2 = 2 remainder 1
2 ÷ 2 = 1 remainder 0

1 ÷ 2 = 0 remainder 1

The binary representation of the whole number part is 10101111.

b) Fractional part:

Multiply 0.175 by 2 repeatedly to obtain the binary digits:

0.175 × 2 = 0.35 (take the whole number part only)
0.35 × 2 = 0.7 (take the whole number part only)
0.7 × 2 = 1.4 (take the whole number part only)
0.4 × 2 = 0.8 (take the whole number part only)
0.8 × 2 = 1.6 (take the whole number part only)
0.6 × 2 = 1.2 (take the whole number part only)
0.2 × 2 = 0.4 (take the whole number part only)

0.4 × 2 = 0.8 (take the whole number part only)

The binary representation of the fractional part is 00101111.Therefore, the binary representation of 175.175 is 10101111.001

Express the complement of the following function in sum of min-terms.

F(A, B, C, D) = Σ(0, 2, 6, 11, 13, 14)

To express the complement of the function F(A, B, C, D) = Σ(0, 2, 6, 11, 13, 14) in sum of min-terms, we need to find the minterms that are not included in the given set and represent them in a sum-of-products form.

The minterms for a 4-variable function are represented by a 4-bit binary number, where each bit corresponds to a variable in the function. The minterm number is determined by converting the binary number to decimal.

Given the minterms Σ(0, 2, 6, 11, 13, 14), we can determine the complement by finding the missing minterms and representing them in sum-of-products form.

The missing minterms are:

1, 3, 4, 5, 7, 8, 9, 10, 12, 15

Now we can express the complement of the function as the sum of min-terms:

F'(A, B, C, D) = Σ(1, 3, 4, 5, 7, 8, 9, 10, 12, 15)

Each minterm in the complement represents a product term where the variables are combined with their complements. For example, minterm 1 (represented in binary as 0001) corresponds to A'BC'D'.

Therefore, the complement of the function F(A, B, C, D) = Σ(0, 2, 6, 11, 13, 14) in sum of min-terms is:

F'(A, B, C, D) = A'BC'D' + A'BCD' + ABCD' + AB'CD' + A'BC'D + A'B'CD' + AB'CD + ABC'D + A'BCD + ABCD

Explain shift register with parallel load. Highlight on its practical implications in simplest language.

A shift register with parallel load is a digital circuit that can shift its stored data to the right or left, similar to a regular shift register. However, it also has an additional feature called parallel load, which allows new data to be loaded in parallel into the register all at once.

In a shift register with parallel load, the data is typically stored in a series of flip-flops. The parallel load feature allows the input data to be loaded into the flip-flops simultaneously when a parallel load signal is activated. This is in contrast to the shifting operation, where the data is shifted bit by bit.

Practical implications of a shift register with parallel load include:

1. Data synchronization: The parallel load feature enables synchronized loading of data into the shift register. This can be useful in applications where multiple data sources need to transfer their data to the register at the same time, ensuring accurate and synchronized data processing.
2. Data storage and retrieval: The shift register can be used as a temporary storage device, where data can be loaded in parallel and then shifted out sequentially as required. This can be helpful in buffering or delaying data for further processing.
3. Serial-to-parallel and parallel-to-serial conversion: By combining the shifting and parallel loading capabilities, a shift register with parallel load can convert serial data to parallel data or vice versa. This is commonly used in communication systems to convert between different data formats or to interface serial devices with parallel data buses.
4. Delay generation: By continuously shifting the data in the register, a shift register with parallel load can introduce controlled delays in a system. This can be used in applications such as signal synchronization, time-based operations, or creating time delays in sequential operations.

In simpler terms, a shift register with parallel load allows you to load a bunch of data into the register all at once or shift the data bit by bit. This can help synchronize data, store and retrieve information, convert between different data formats, and introduce controlled delays in a system. It finds applications in areas like communication, data processing, and timing operations.

Explain master slave J-K flipflop in simplest language.

A master-slave J-K flip-flop is a type of digital circuit that stores and controls the state of a binary signal. It is made up of two interconnected flip-flops, a master flip-flop, and a slave flip-flop.

Here's a simple explanation of how a master-slave J-K flip-flop works:

1. Master Flip-Flop:
    - The master flip-flop is responsible for capturing the input signal (J and K) and storing it temporarily.
    - It has two inputs: J (set) and K (reset). When J and K are both low (0), the master flip-flop holds its current state.
    - When J is high (1) and K is low (0), the master flip-flop sets its output to high (1).
    - When J is low (0) and K is high (1), the master flip-flop sets its output to low (0).
    - When J and K are both high (1), the master flip-flop is in a "toggle" mode, where its output switches to the opposite state from its current state.
2. Slave Flip-Flop:
    - The slave flip-flop is connected to the output of the master flip-flop and stores the captured state from the master flip-flop.
    - It only changes its output when triggered by a clock signal.
    - When the clock signal transitions from low (0) to high (1), the slave flip-flop copies the state of the master flip-flop into its output.
    - The output of the slave flip-flop remains stable until the next clock pulse.

By combining the master and slave flip-flops, the master-slave J-K flip-flop ensures that the input signal is captured by the master flip-flop and then transferred to the slave flip-flop only when the clock signal changes state. This synchronization prevents any glitches or unintended changes in the output.

The master-slave J-K flip-flop is commonly used in digital systems for tasks like frequency division, data synchronization, and sequential logic operations. It provides a way to control and store binary information reliably.