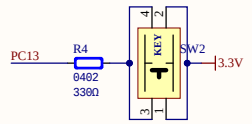

用户按键
User KEY

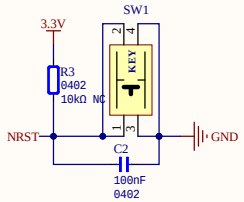

复位电路
Reset circuit

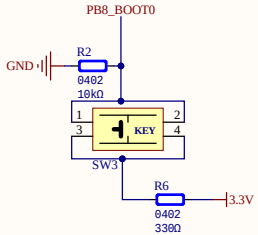

BOOT设置
BOOT Settings

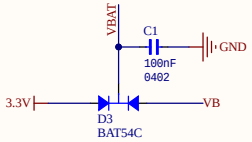

RTC电源
RTC circuit

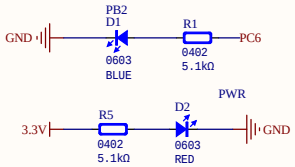

指示灯
Indicator light

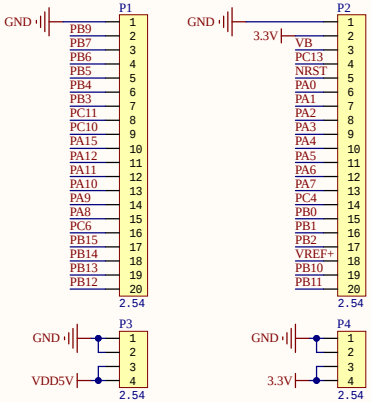

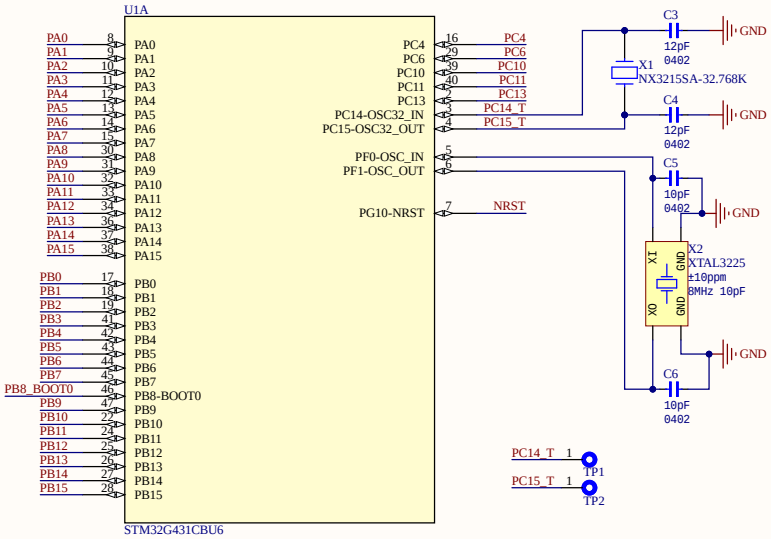

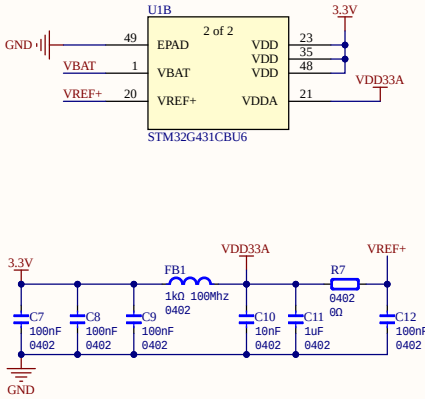

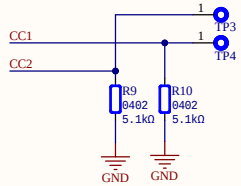

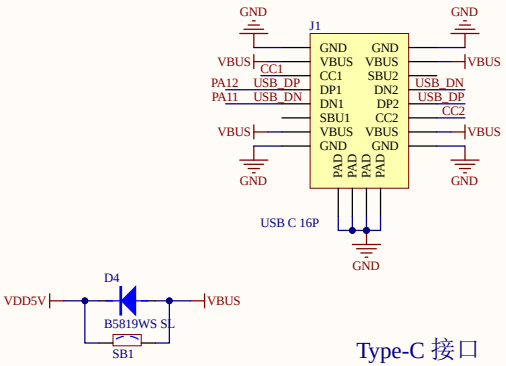

Type-C 接口
Type-C interface

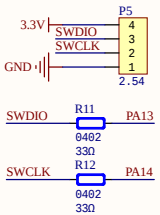

SW 调试下载接口
SW debug download interface

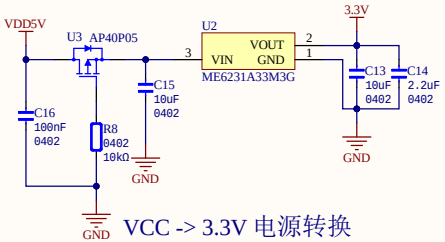

VCC -> 3.3V 电源转换
VCC -> 3.3V Power conversion
VCC IN: 3.3V - 5.5V

WeAct Studio

Title	STM32G4xx Core Board Long	
Size A3	Number	Revision V1.0
Date: 5/29/2024	Sheet of	
File: E:\WeActStudio\..\WeAct-STM32G43x_Core_Board.SchDoc	Drawn By: zhuyix	