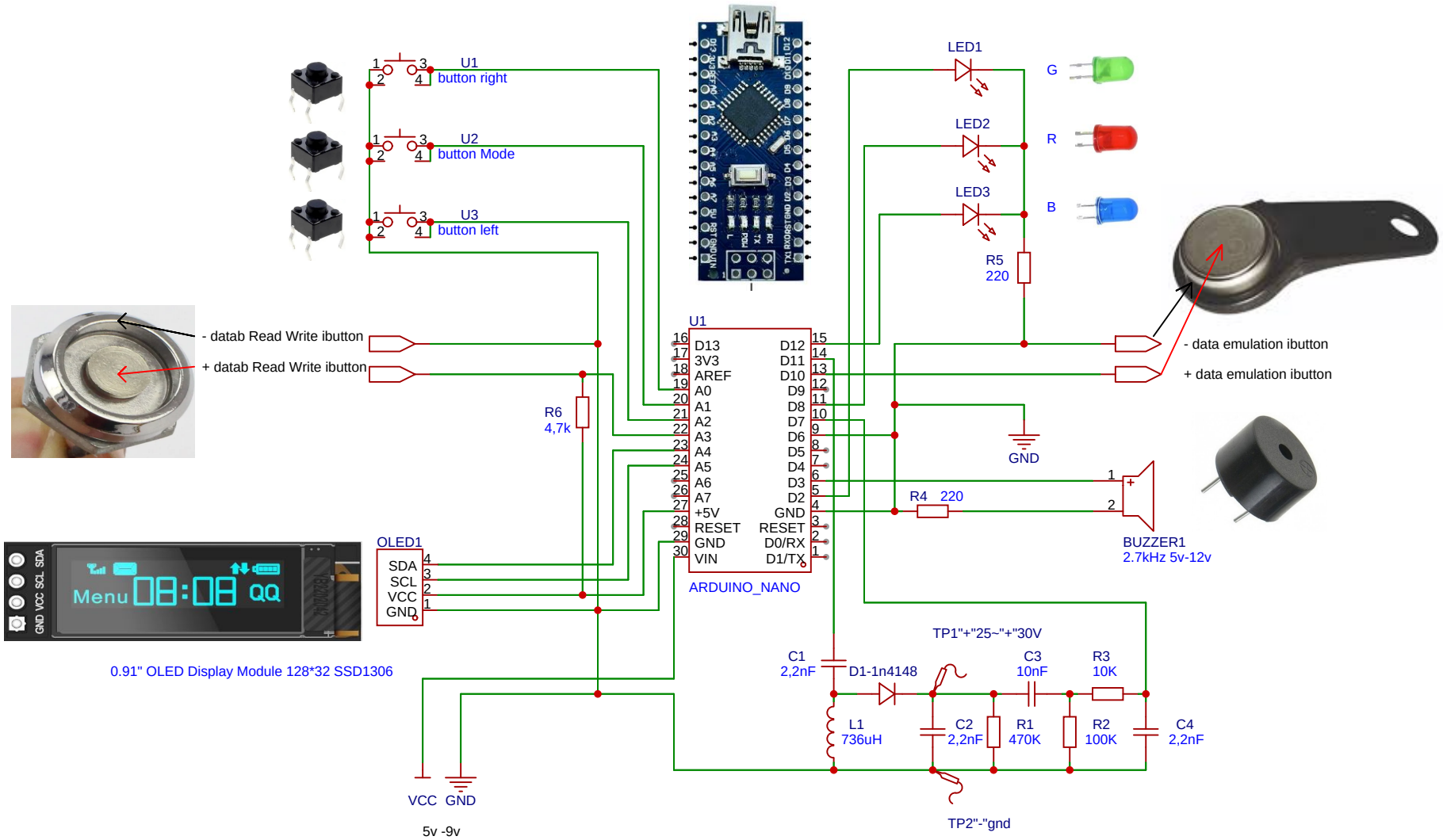

Schematic	Schematic1	Create at	2026-02-24
		Update at	2026-02-24
Board	Board1	Page	P1
Drawn		MultiKey_Rfid_iButton_Read_Write_Emulate	
Reviewed			
		Version	Size	Page 1 Total 1
EasyEDA		V1.0	A4	EasyEDA.com