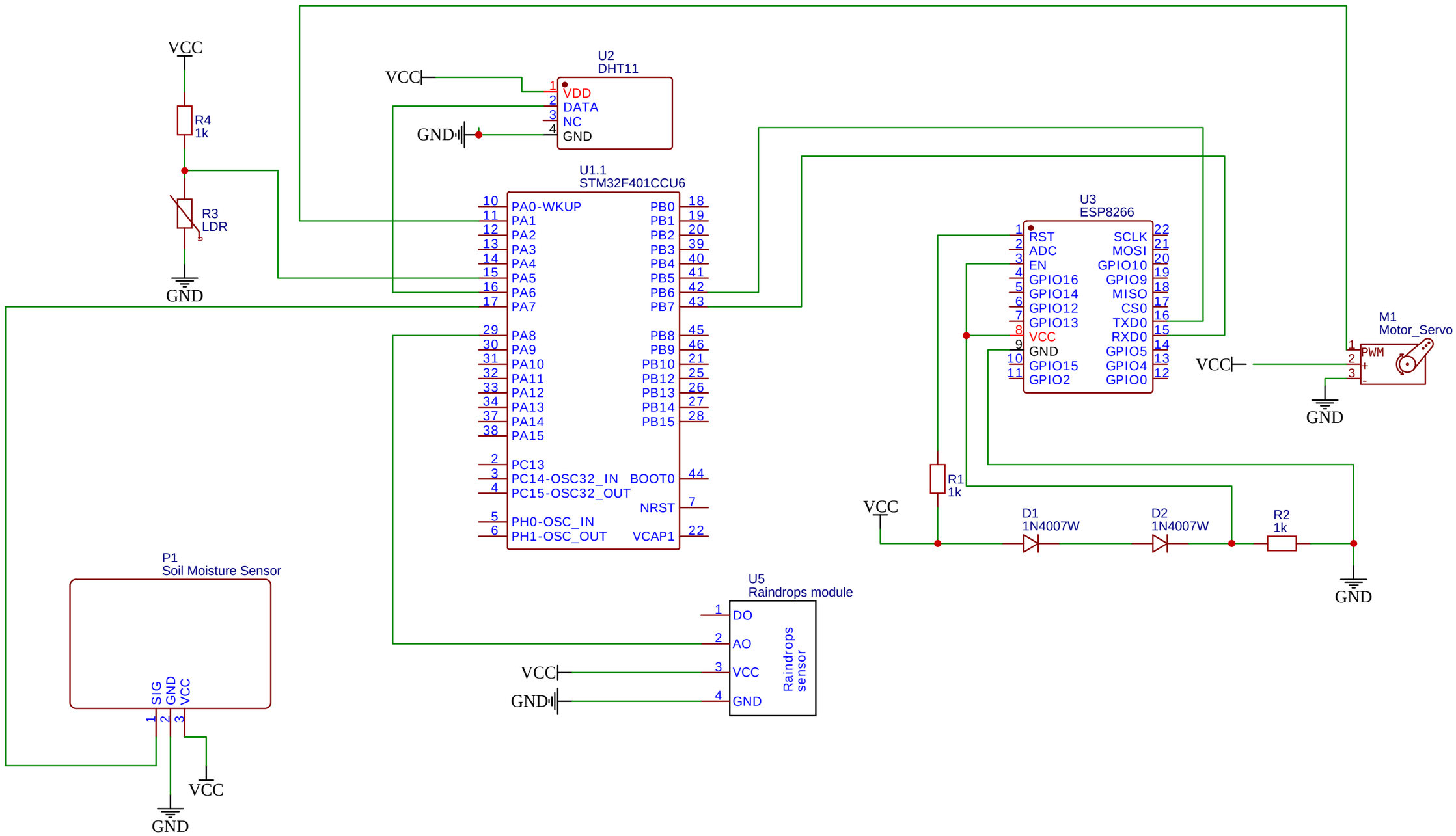

TITLE: Weather Station	REV: 1.0
嘉立创EDA Company: Sensor Cerdas	Sheet: 1/1
Date: 2022-11-24 Drawn By:	