Proiect SCIA

Profesor indrumator:

Alessandro Battigelli

Vladu Eduard

Student: Dinca Mihai Mircea

Anul III, EA, Grupa 2131

Cuprins

Capitolul 1. Cerinte de proiectare 1
Capitolul 2. Circuit electric – proiectare si simulare 2
Etaj 1 – Amplificator 2
- DCOP 7
- AC 8
- Transient 9

Etaj 2 – Filtru 13
- DCOP 15
- AC 16
- Transient 17

Etaj 3 – PGA 19
- DCOP 21
- AC 22
- Transient 24

Etaj 4 – Redresor 28
- DCOP 30
- DC SWEEP 30
- Transient 31

Capitolul 3. Implementare circuit 32
Etajul 1 32
Etajul 2 34
Etajul 4 36

Capitolul 1. Cerinte de proiectare

Specificatii generale:

Proiectarea unei interfete analogice formate din urmatoarele blocuri conectate in cascada:

1. un preamplificator/amplificator de instrumentatie cu intrare diferentiala/single ended in tensiune/curent si iesire in tensiune/current
2. un filtru analogic trece jos/trece banda cu intrare in tensiune/curent si iesire in tensiune
3. un amplificator cu castig programabil
4. un peak detector/redresor de precizie / convertor AC-DC / circuit Sample&Hold

Schema bloc circuit:

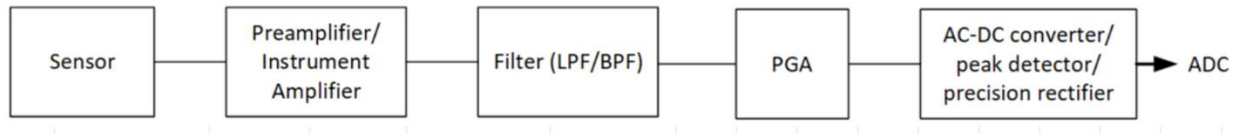

Figura 1- Schema Bloc Circuit

Capitolul 2. Circuit electric – proiectare si simulare

Etaj 1 – Amplificator

Specificatii individuale:

Etaj 1					
Tip Sursa semnal	amplitudine minima (pt castig maxim PGA)	amplitudine maxima (pt castig minim PGA)	unitate masura	Tip Etaj 1	|Castig| etaj 1 (liniar)
1	1.85E-01	5.21E-01	V (single ended)	1	3

Figura 2 - Specificatii individuale etaj1

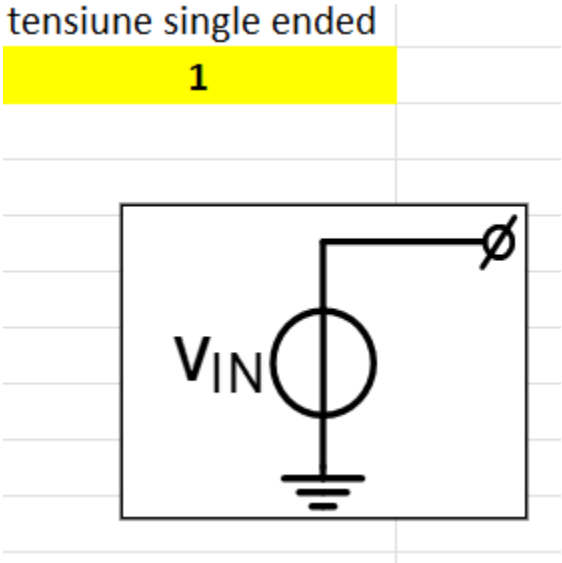

Figura 3 – Sursa

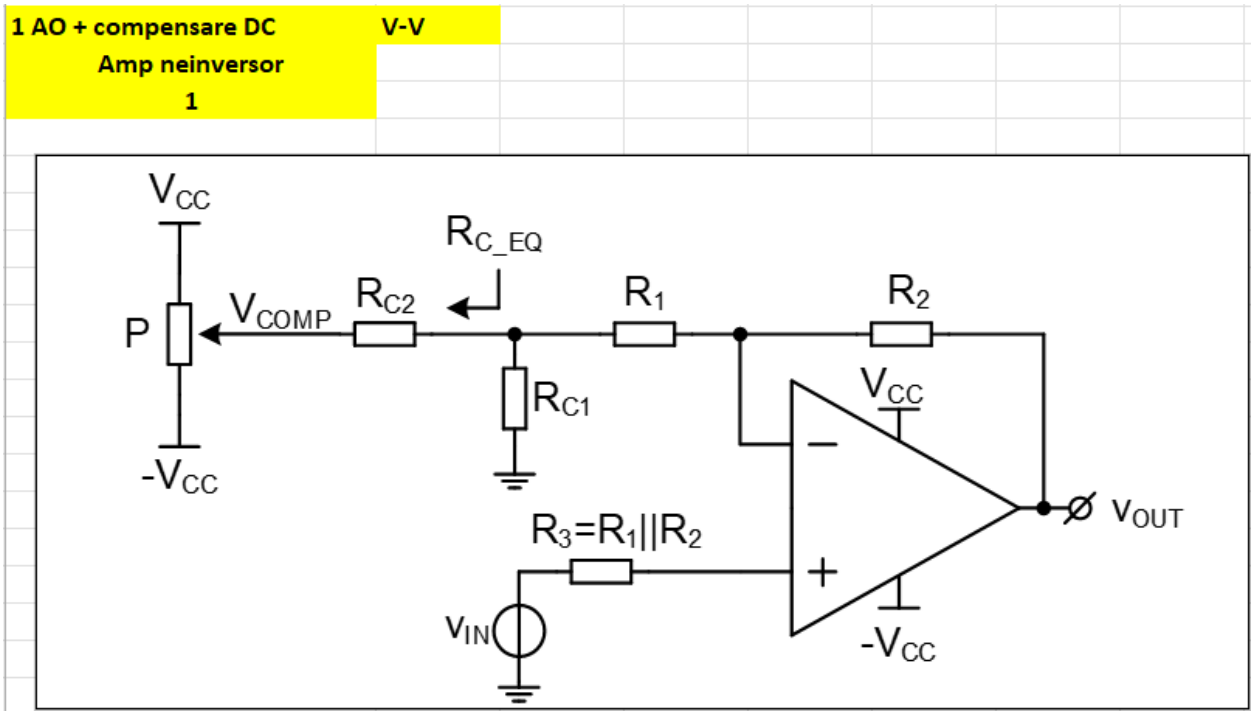

Figura 4 – TipEtaj

Schema circuit si dimensionare:

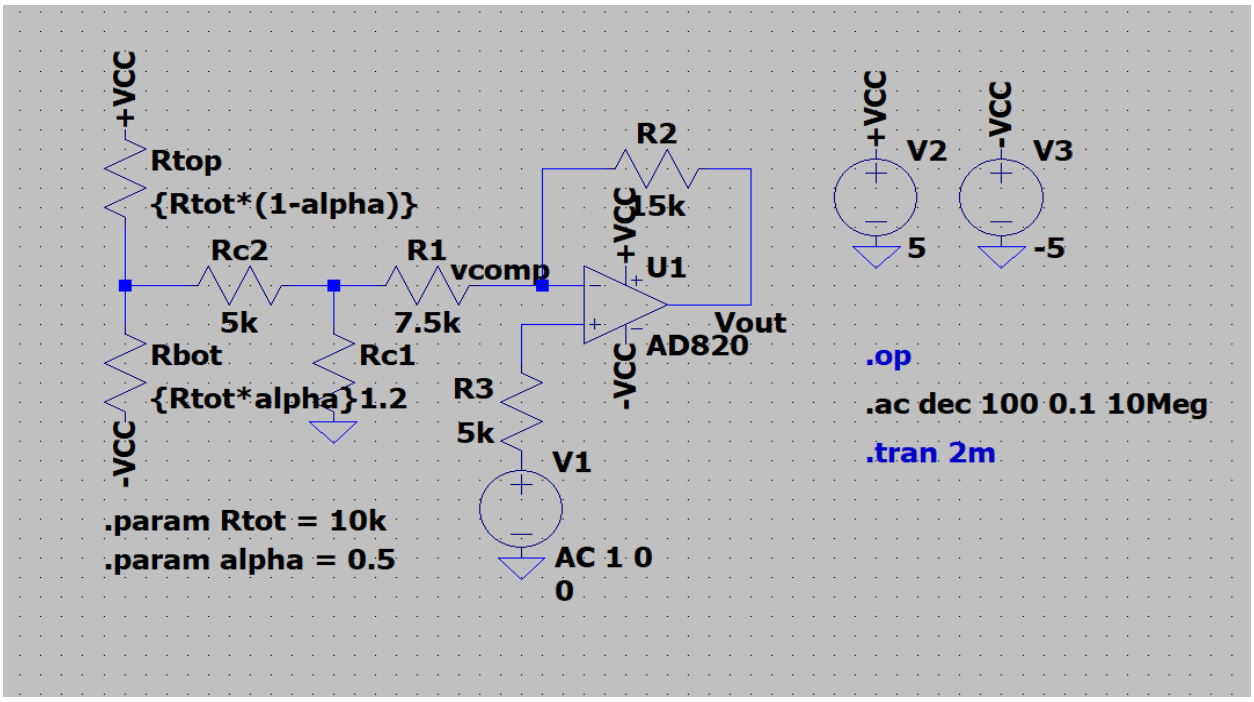

Figura 5- Schema Circuit

Dimensionare:

Etaj 1 → Amplificator neinv.

$Ampl_{min} = 185mV$

$Ampl_{max} = 521mV$

$A_{v(cerut)} = \frac{V_o}{V_{in}} = 3$

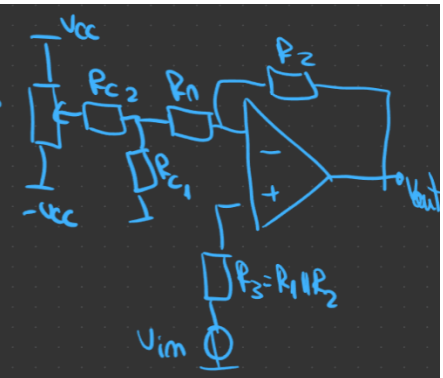

JPN: $v^+ = v^-$

$1 + \frac{R_F}{R_G} = 3 \Rightarrow \frac{R_F}{R_G} = 2$

$R_2 = 15k$
$R_1 = 7,5k$ Alg.

$I_o = \frac{V_o}{R_F + R_G}$

$I_{o\,max} = \frac{1,563}{3k\Omega} = 521\mu A$

$I_{o\,min} = \frac{555mV}{3k\Omega} = 185\mu A$

$\Rightarrow$ Alg $I_{o\,max} = 200\mu A$

$R_1 || R_2 = \frac{15 \cdot 7,5}{15 + 7,5} =$

Smic:

$GBW = A_V \cdot BW$

$BW = \frac{GBW}{A_V} = \frac{1,8 \cdot 10^6}{3} = 600kHz$

Smax:

$V_{out} \cdot 2\pi \cdot 8k < SR_{AO}$

$A_V \cdot V_{in} \cdot 2\pi 8kHz < SR_{AO}$

$3 \cdot 521 \cdot 6,28 \cdot 8$

$\frac{78525V}{s} < SR_{AO}$

$\frac{78,5 \cdot 10^3 V}{10^6 \mu s} = 0,0785 \frac{V}{\mu s} < 3 \frac{V}{\mu s} (SR_{AO})$

$$V_{out}\,\varepsilon\big|_{V_{OS}} = \left(1 + \frac{R_2}{R_1}\right) \cdot V_{OS}$$

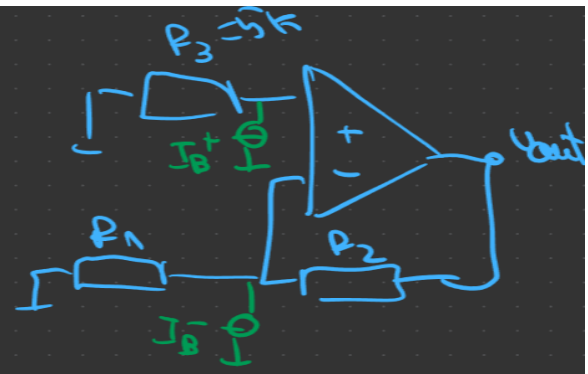

$$V_{out}\,\varepsilon\big|_{I_B^+} = (R_3 I_B^+)\left(1 + \frac{R_F}{R_G}\right)$$

$$V_{out}\,\varepsilon\big|_{I_B^-} = -V_{out} = -I_B^- \cdot R_2$$

$$I_B^+ = I_B^- = I_B$$

$$V_{out}\,\varepsilon\big|_{I_B^+} = V_{out}\,\varepsilon\big|_{I_B^-} = R_2 = R_3\left(1 + \frac{R_F}{R_G}\right)$$

$$R_2 = R_3\left(\frac{R_2 + R_1}{R_1}\right)$$

$$15\,k = 5\,k\left(\frac{15\,k + 7{,}5\,k}{7{,}5\,k}\right)$$

$$= 15\,k \Rightarrow \text{EOK}$$

$$v^+ = v^-$$

$$v^+ = V_{R_3} = R_3 \cdot I_{B_1}$$

$$v^- = \frac{\frac{0}{R_G} + \frac{V_{out}}{R_F}}{\frac{1}{R_G} + \frac{1}{R_F}} = \frac{V_{out}}{R_F} \cdot \frac{R_G R_F}{R_G + R_F}$$

$$V_{out} \cdot \frac{R_G}{R_G + R_F} = R_3 I_{B_1}$$

$$V_{out}\,\varepsilon\big|_{V_{OS}} = 3 \cdot 0{,}8\ mV = 2{,}4\ mV$$

$$V_{out}\ \varepsilon \in [-2{,}4\ ;\ +2{,}4]\ [mV]$$

Compensazione tensioni di errore

$$V_{out} = A_V \cdot V_{in} + \underbrace{V_{out\,\varepsilon} + V_{out}\big|_{V_{comp}}}_{0}$$

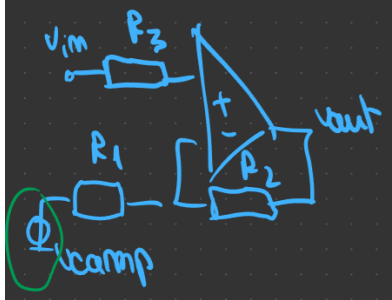

$$V_{out}\big|_{V_{comp}} = -\frac{R_2}{R_G} V_{comp}$$

$$V_{out\,\varepsilon} = V_{comp} \Rightarrow -\frac{R_2}{R_G} \cdot V_{comp} = 2{,}4\ mV$$

$$V_{comp} = \frac{2{,}4}{2} = 1{,}2\ mV$$

$$\Rightarrow V_{comp} \in [-1{,}2\ mV; +1{,}2\ mV]$$

$$V_{out}\big|_{V_{in}} = 1 + \frac{R_2}{R_1 + R_{in}}$$

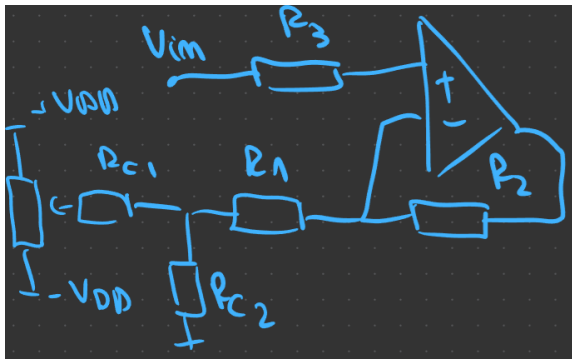

$1{,}16V = V_{out}$

$$R_{ech} = R_{c2} \parallel (R_{c1} + R_{pot})$$

$$V_{comp} = \frac{R_{c2}}{R_{c1} + R_{c2}} \cdot V_{pot}$$

$$\frac{R_{c2}}{R_{c1} + R_{c2}} = \frac{V_{comp}}{V_{pot}} = \frac{1{,}2\ mV}{5\ V} = \begin{cases} R_{c2} = 1{,}2\ \Omega \\ R_{c1} = 4{,}99\ k\Omega \simeq 5\ k\Omega \end{cases}$$

Simulari:

- DCOP

Punct static de functionare:

```
--- Operating Point ---

V(+vcc):        5               voltage
V(-vcc):        -5              voltage
V(n001):        -1e-08          voltage
V(n002):        -5.33164e-13    voltage
V(n003):        -1.59949e-12    voltage
V(p001):        0               voltage
V(vin):         -1e-08          voltage
V(vout):        3.13236e-12     voltage
I(R1):          -1.33312e-12    device_current
I(R2):          -2e-12          device_current
I(R3):          6.66877e-13     device_current
I(Rbot1):       0.001           device_current
I(Rc1):         1.33291e-12     device_current
I(Rc2):         2.13266e-16     device_current
I(Rtop1):       0.001           device_current
I(V1):          -2e-12          device_current
I(V2):          -0.00170247     device_current
I(V3):          0.00170247      device_current
Ix(u1:1):       2e-12           subckt_current
Ix(u1:2):       2e-12           subckt_current
Ix(u1:3):       0.000702467     subckt_current
Ix(u1:4):       -0.000702467    subckt_current
Ix(u1:5):       -6.66877e-13    subckt_current
```

Figura 6 - punct static de functionare

Compensare DC:

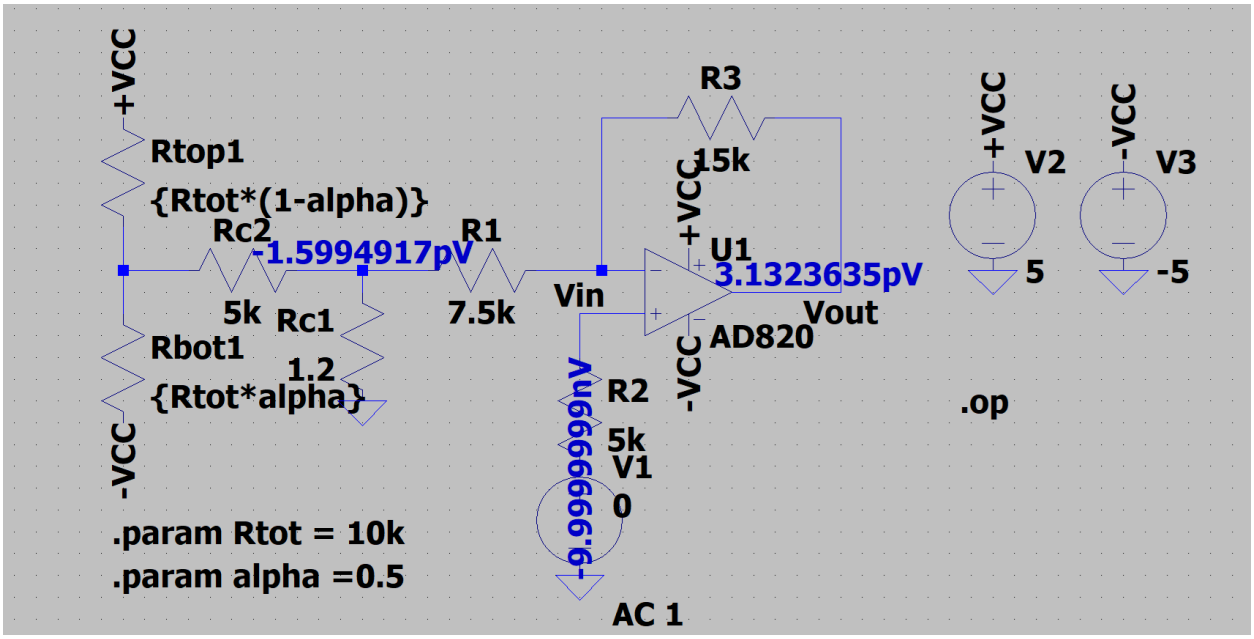

Figura 7 - compensare/ajustare nivel DC la iesire

- AC

Simulare castig la joasa frecventa :

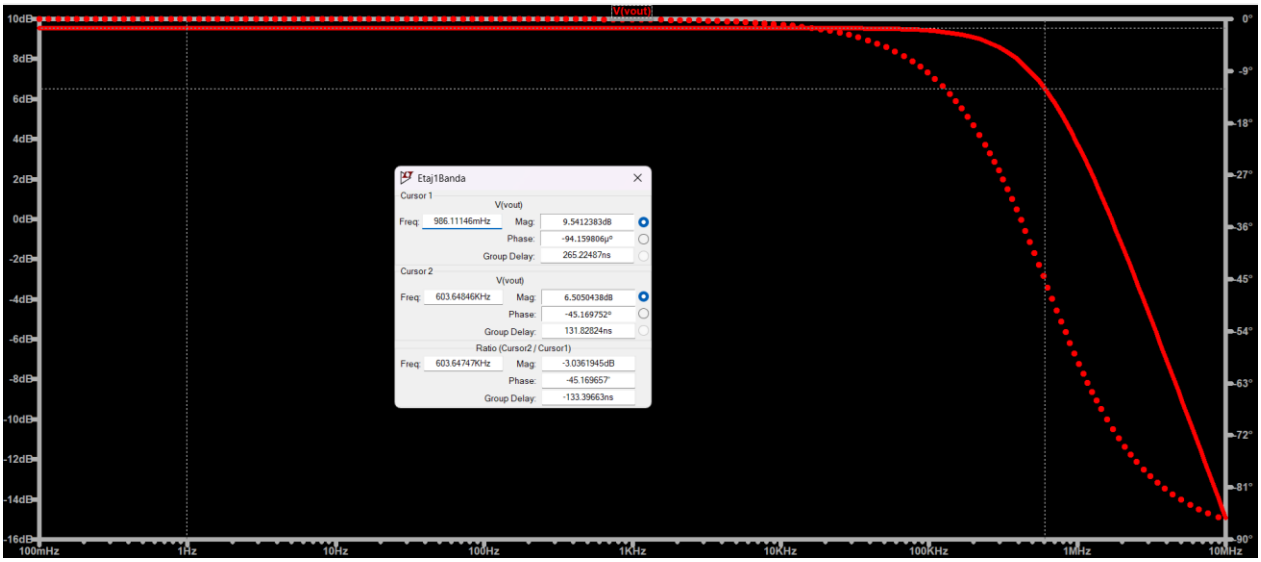

Figura 8 - castig la joasa frecventa si banda Simulari

Castig joasa frecventa masurat:

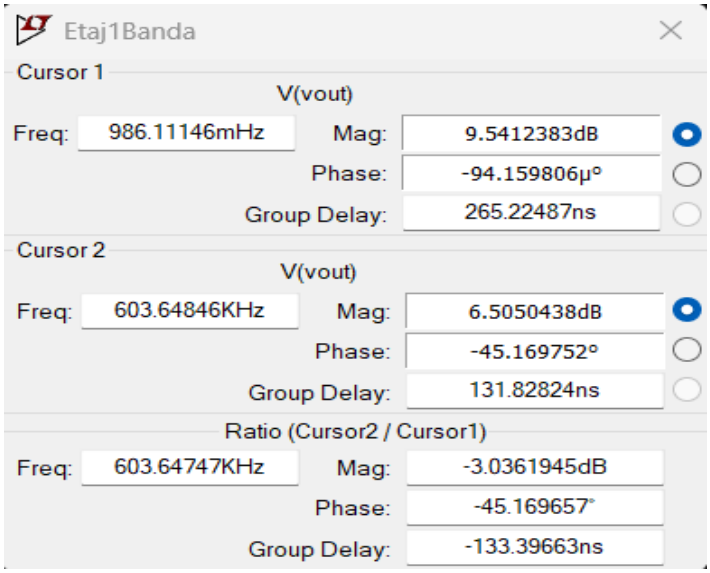

Figura 9 - castig la joasa frecventa si banda Masuratori

- Transient

Setare sursei pentru masurarea SR:

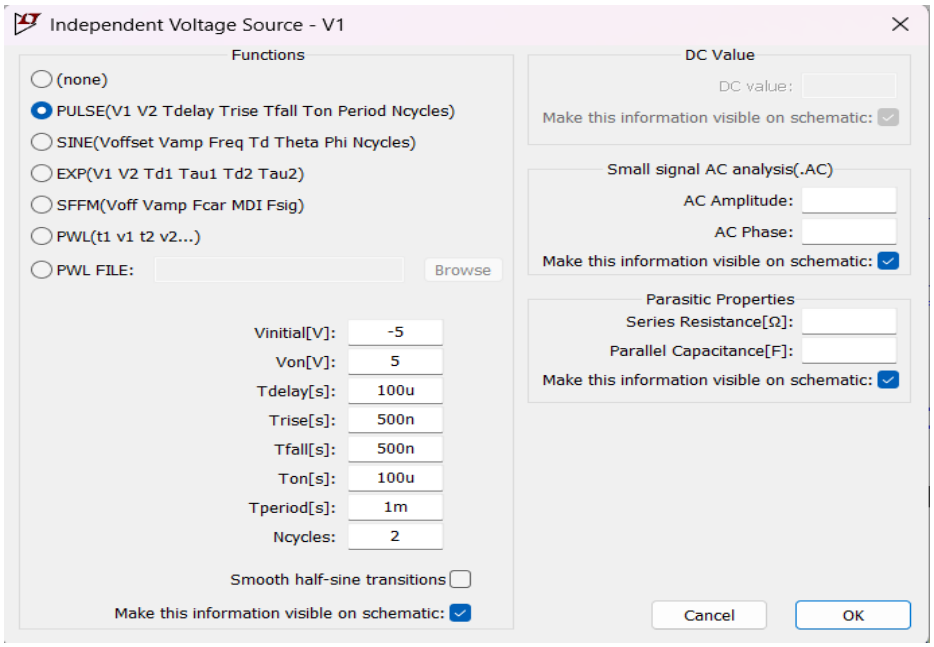

Figura 10 – Sursa V1 pentru masurare SR

SR Simulare:

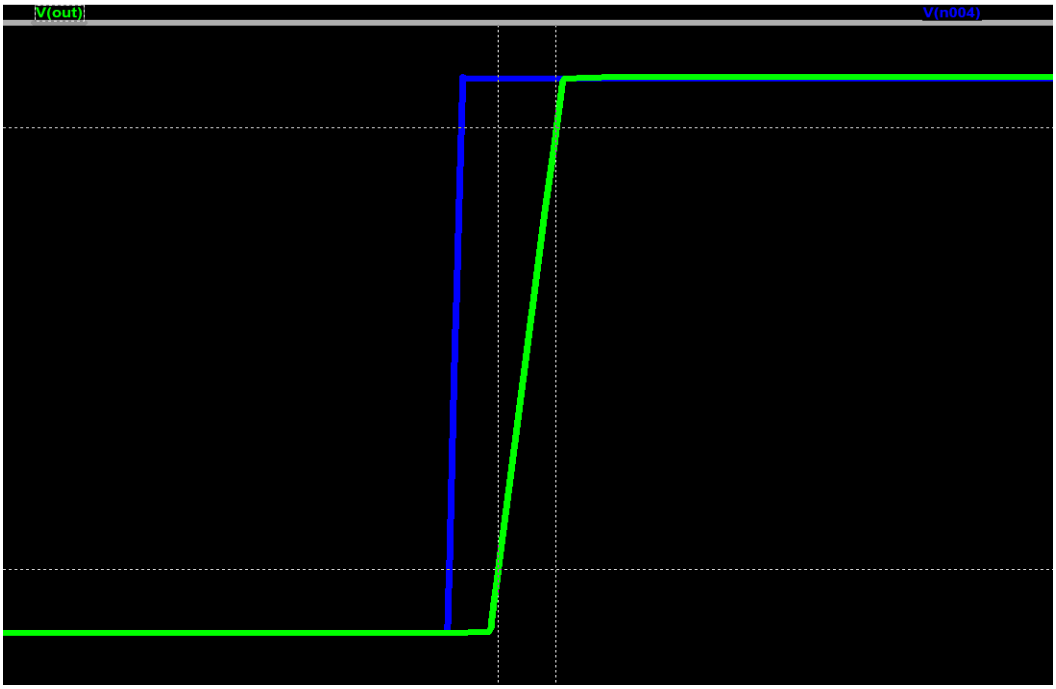

Figura 10.1 – Vout,Vin si pozitionarea cursoarelor

Masurare SR(Slope):

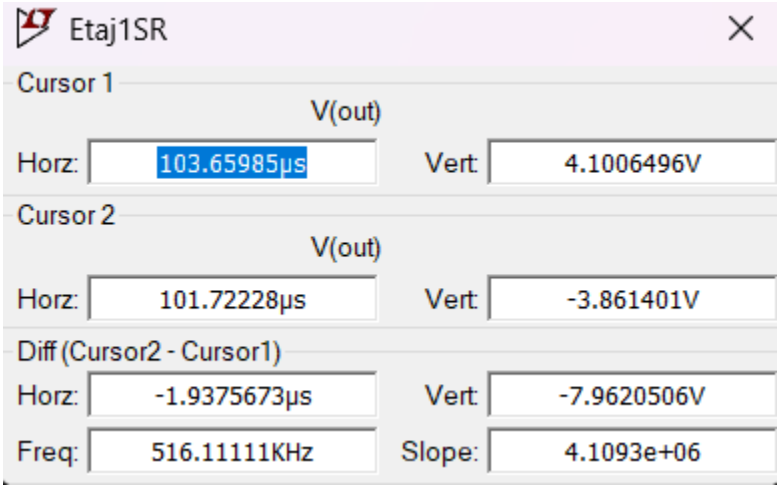

Figura 11 – SR Masuratori

Analiza tranzitorie semal de iesire:

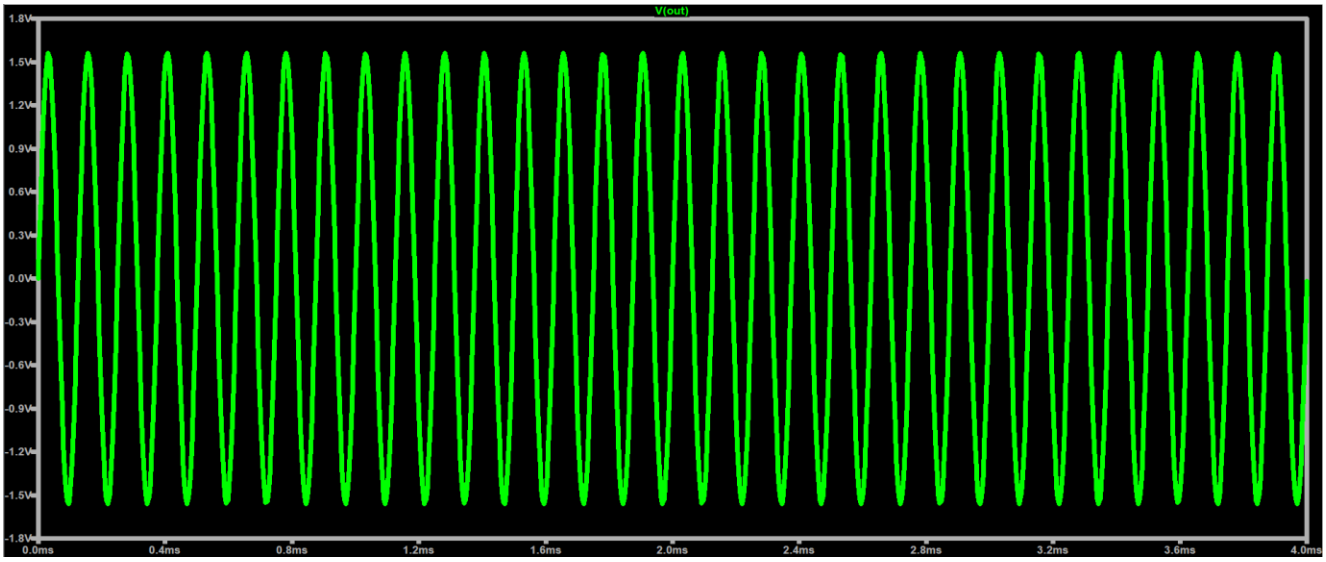

Figura 12 – Liniaritate Simulari

Setarea sursei pentru masurarea THD:

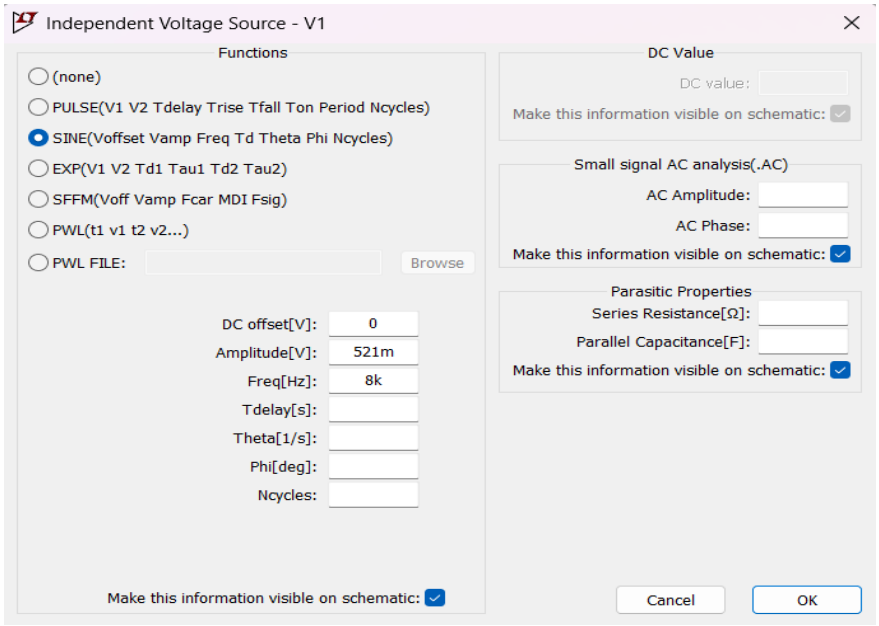

Figura 12.1– Sursa cu amplitudina maxima de intrare

FFT:

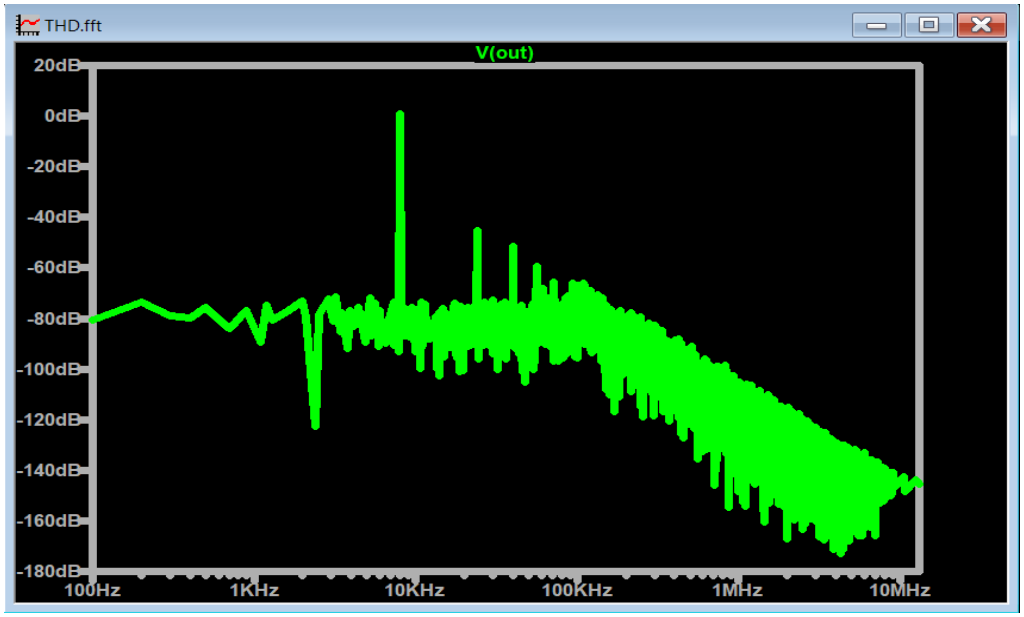

Figura 12.2 – fft

Masurare THD din Output Log:

SPICE Output Log: D:\Dinca\PROIECTE\ProiectSCIA\Etaj1\Etaj1Sim\THD.log

```
temp = 27
method = trap
Direct Newton iteration for .op point succeeded.
Total elapsed time: 0.102 seconds.

Files loaded:
D:\Dinca\PROIECTE\ProiectSCIA\Etaj1\Etaj1Sim\THD.net
C:\Users\mihai\AppData\Local\LTspice\lib\sub\ADI1.lib

Fourier components of  V(out)
N-Period=80.00
DC component:0.000130293

Harmonic     Frequency     Fourier     Normalized    Phase       Normalized
 Number        [Hz]       Component     Component   [degree]     Phase [deg]
    1        8.000e+03   1.549e+00   1.000e+00     90.77Â°       0.00Â°
    2        1.600e+04   5.558e-05   3.588e-05    136.10Â°      45.33Â°
    3        2.400e+04   7.864e-03   5.077e-03    -44.37Â°    -135.14Â°
    4        3.200e+04   2.448e-04   1.580e-04   -137.04Â°    -227.81Â°
    5        4.000e+04   3.778e-03   2.439e-03    141.61Â°      50.84Â°
    6        4.800e+04   8.344e-05   5.386e-05     64.88Â°     -25.89Â°
    7        5.600e+04   1.535e-03   9.910e-04   -112.29Â°    -203.06Â°
    8        6.400e+04   2.704e-04   1.745e-04     90.34Â°      -0.43Â°
    9        7.200e+04   7.480e-04   4.829e-04     34.61Â°     -56.16Â°
   10        8.000e+04   1.624e-04   1.048e-04    -31.28Â°    -122.05Â°
Partial Harmonic Distortion: 0.574502%
Total Harmonic Distortion:   0.801958%
```

Figura 13 – Liniaritate THD < 1%

Etaj 2 – Filtru

Specificatii individuale:

Etaj 2				
tip Etaj 2	|H0| castig liniar in banda de trecere	Rintrare minim	Banda	Q
10	1	7.50E+02	8.00E+03	1

Figura 14 - Specificatii individuale etaj2

Band pass 2 AO V-V Tow-Thomas		H0 [V/V]	Rin_min	Bandwidth	Q	f0 [Hz]
10		1	spec individual	spec individual	spec individual	BW*Q

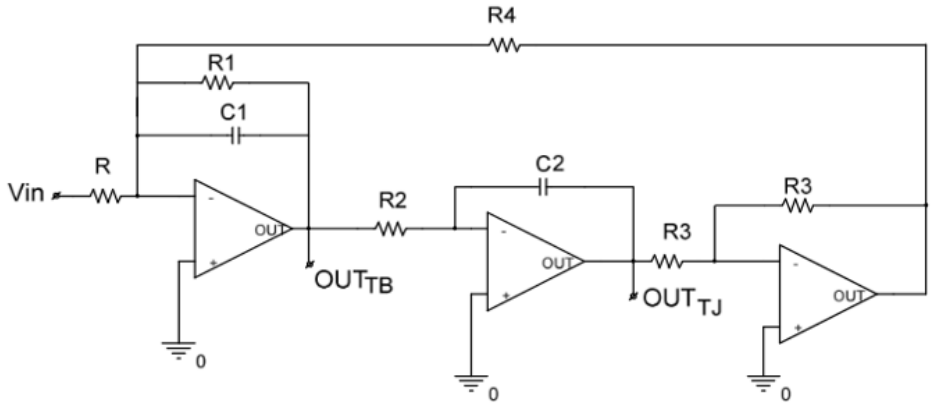

Figura 15 – Tip etaj2

Schema circuit si dimensionare:

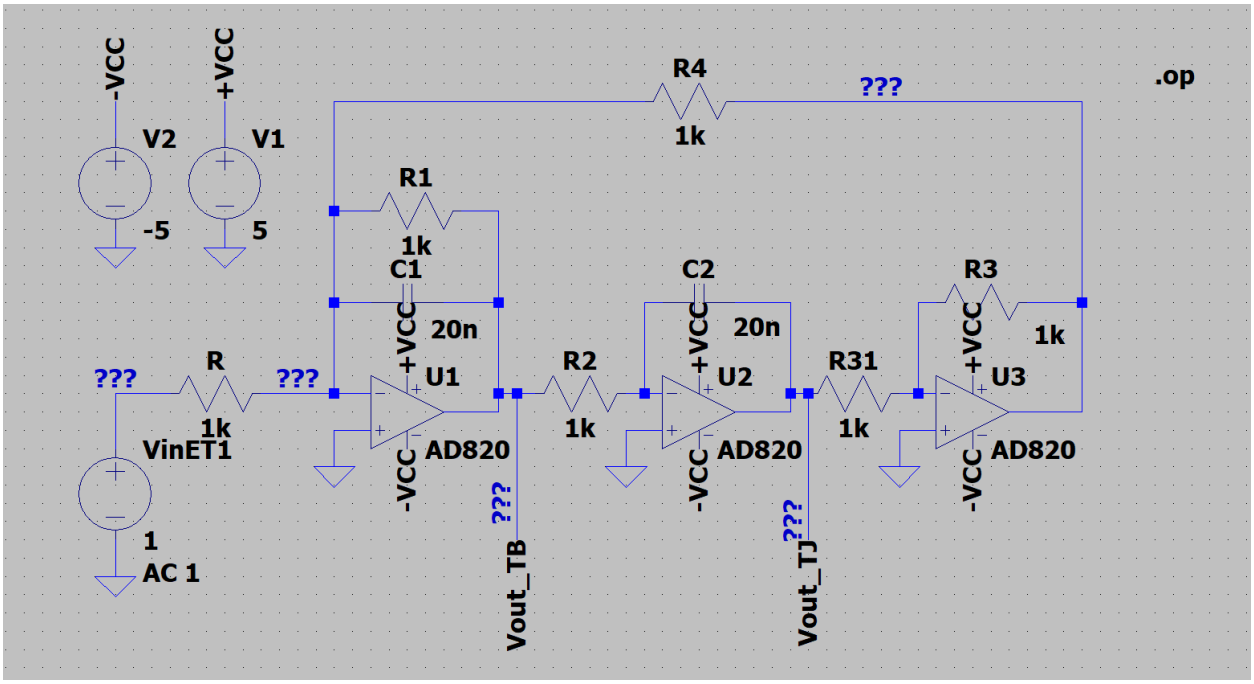

Figura 16 – Etaj2 Schema Circuit

Dimensionare:

intrare curent			
w0 [rad/sec]	Q	f0 [Hz]	H0 [linear]
5.03E+04	1.00E+00	8.00E+03	1.00E+00

BPF I-V

C1=C2 [F]	R1 [Ohm] = H0	R2 [Ohm]	R3 [Ohm]	R4 [Ohm]
1.99E-05	1.00E+00	1.00E+00	1.00E+03	1.00E+00

BPF transfer function parameters

$$H_0 = R_1; \omega_0 = \frac{1}{\sqrt{R_2 R_4 C_1 C_2}} \qquad Q = R_1 \sqrt{\frac{C_1}{C_2} \cdot \frac{1}{R_2 R_4}};$$

Sizing strategy:

$$H_0 = R_1;$$

set $R_2 = R_4 = R_1/Q$; choose the value of R_3

$$C_1 = C_2 = \frac{1}{\omega_0 \cdot R_2}$$

R_4

Simulari:

- DCOP

Punct static de functionare:

D:\Dinca\PROIECTE\ProiectSCIA\Etaj2\Etaj2Sim\Etaj2op.net

```
       --- Operating Point ---

V(+vcc):        5              voltage
V(-vcc):        -5             voltage
V(n001):        4.76468e-10    voltage
V(n002):        -0.999986      voltage
V(n003):        -1.43044e-05   voltage
V(n004):        2.19268e-05    voltage
V(n005):        1              voltage
V(vout_tb):     -1.43024e-05   voltage
V(vout_tj):     1.00003        voltage
I(C1):          -2.86058e-25   device_current
I(C2):          2.00009e-20    device_current
I(R):           -0.001         device_current
I(R1):          -1.43029e-08   device_current
I(R2):          -2e-12         device_current
I(R3):          -0.00100001    device_current
I(R31):         -0.00100001    device_current
I(R4):          -0.000999986   device_current
I(V1):          -0.00310846    device_current
I(V2):          0.00410846     device_current
I(VinET1):      -0.001         device_current
Ix(u1:1):       2e-12          subckt_current
Ix(u1:2):       2e-12          subckt_current
Ix(u1:3):       0.000702467    subckt_current
Ix(u1:4):       -0.000702482   subckt_current
Ix(u1:5):       1.43009e-08    subckt_current
Ix(u2:1):       2e-12          subckt_current
Ix(u2:2):       2e-12          subckt_current
Ix(u2:3):       0.00170299     subckt_current
Ix(u2:4):       -0.000702979   subckt_current
Ix(u2:5):       -0.00100001    subckt_current
Ix(u3:1):       2e-12          subckt_current
Ix(u3:2):       2e-12          subckt_current
Ix(u3:3):       0.000703007    subckt_current
Ix(u3:4):       -0.002703      subckt_current
Ix(u3:5):       0.00199999     subckt_current
```

Figura 17 – OP

- AC

Banda de trecere:

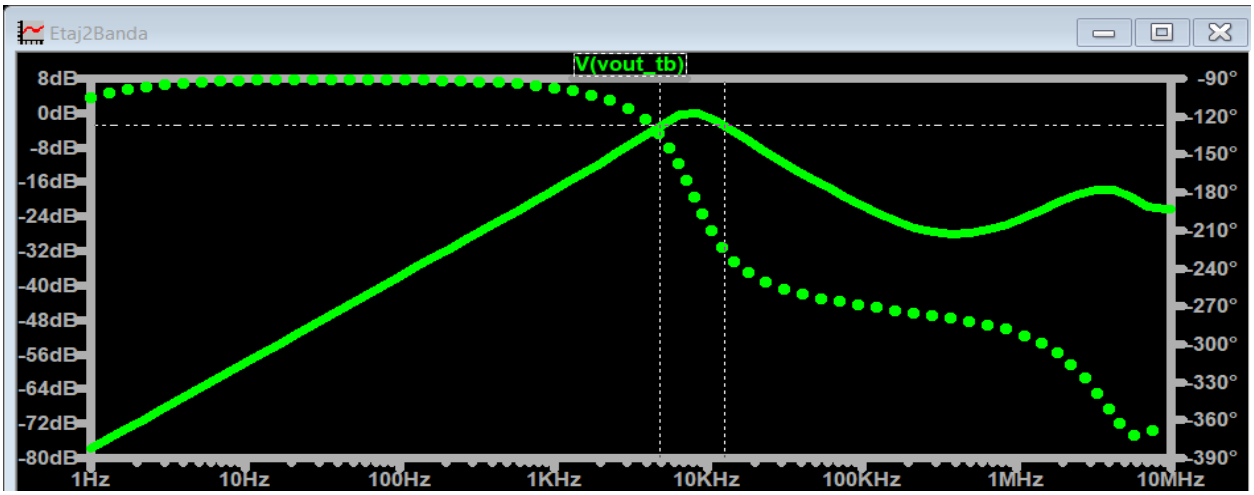

Figura 18 – Banda

Masurare banda de trecere:

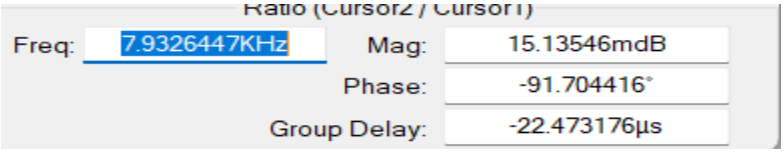

Figura 19 – Banda masurata

Castig in banda:

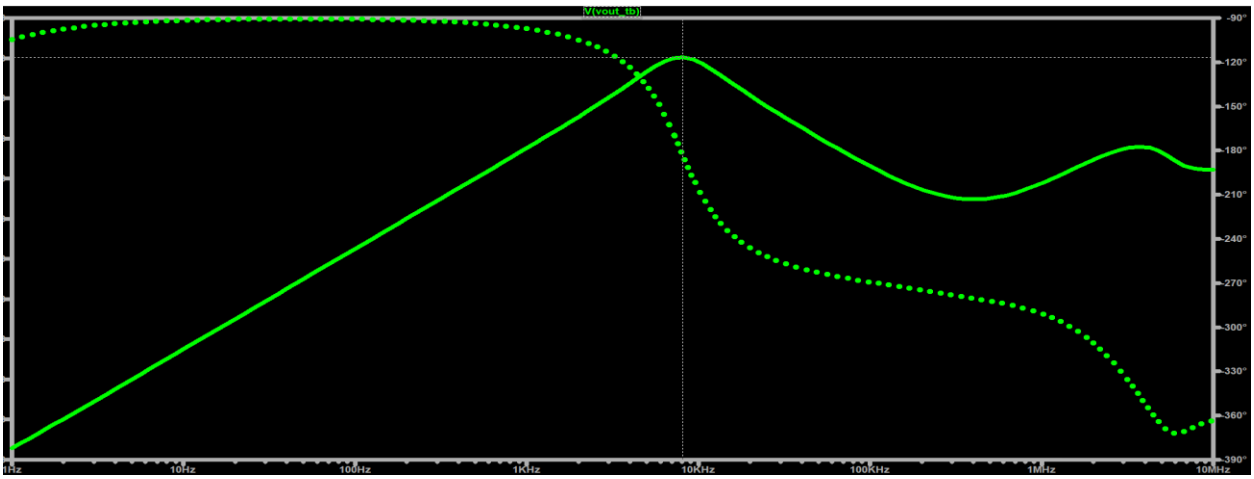

Figura 20 – Castig in banda Simulare

Banda masurata:

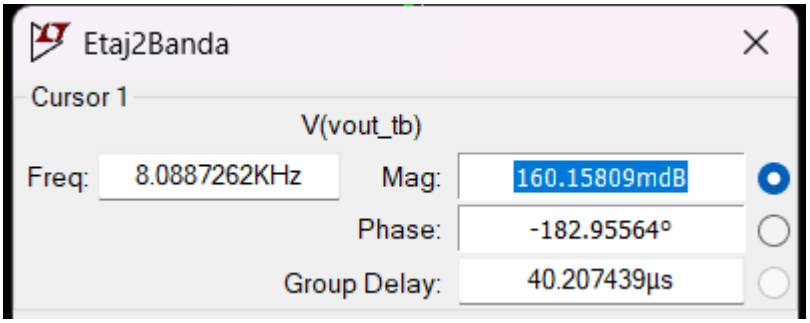

Figura 21 – Castig in banda si banda de trecere Masuratori

- Transient

Setarea surselor pentru THD, amplitudine minima si maxima de la iesirea primului etaj:

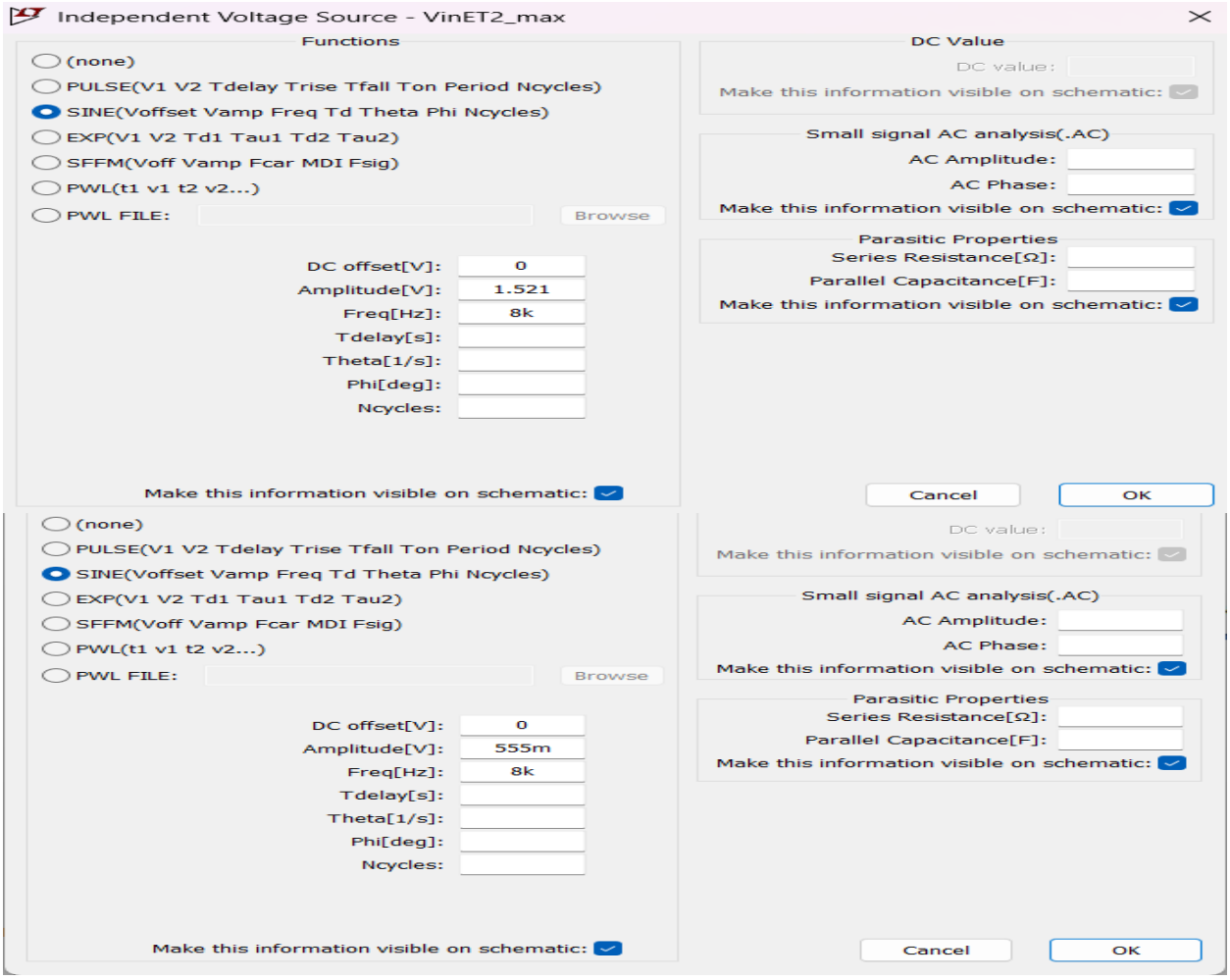

Figura 21.1 – Semnalul de intrare pt

Liniaritate Vout:

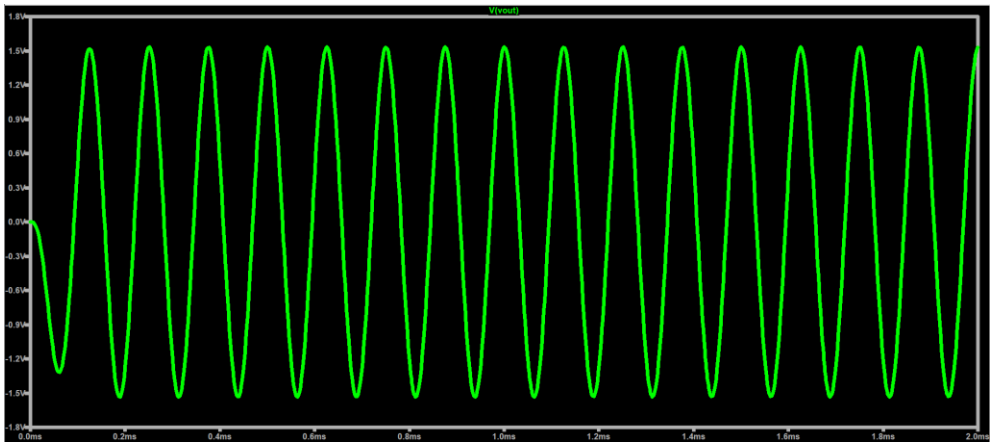

Figura 22 – Liniaritate Simulari

THD:

SPICE Output Log: D:\Dinca\PROIECTE\ProiectSCIA\Etaj2\Etaj2Sim\THD.log

```
temp = 27
method = trap
Direct Newton iteration for .op point succeeded.
Total elapsed time: 0.150 seconds.

Files loaded:
D:\Dinca\PROIECTE\ProiectSCIA\Etaj2\Etaj2Sim\THD.net
C:\Users\mihai\AppData\Local\LTspice\lib\sub\ADI1.lib

Fourier components of  V(Vout_TB)
N-Period=16.00
DC component:0.0153748

Harmonic     Frequency     Fourier     Normalized    Phase       Normalized
 Number        [Hz]       Component     Component   [degree]     Phase [deg]
    1        8.000e+03    1.515e+00    1.000e+00    -88.37Â°       0.00Â°
    2        1.600e+04    8.447e-03    5.574e-03    149.41Â°     237.78Â°
    3        2.400e+04    3.463e-03    2.285e-03    166.63Â°     255.00Â°
    4        3.200e+04    1.880e-03    1.241e-03    172.17Â°     260.54Â°
    5        4.000e+04    1.331e-03    8.786e-04   -176.88Â°     -88.50Â°
    6        4.800e+04    8.312e-04    5.485e-04   -177.98Â°     -89.61Â°
    7        5.600e+04    7.264e-04    4.793e-04   -166.71Â°     -78.34Â°
    8        6.400e+04    4.922e-04    3.248e-04   -171.52Â°     -83.14Â°
    9        7.200e+04    4.028e-04    2.658e-04   -179.59Â°     -91.21Â°
   10        8.000e+04    3.320e-04    2.191e-04   -169.31Â°     -80.93Â°
Partial Harmonic Distortion: 0.627304%
Total Harmonic Distortion:   9.911390%
```

Figura 23 – Liniaritate Masuratori

Etaj 3 – PGA

Specificatii individuale:

Etaj 3					
tip Etaj 3	castig minim [dB]	rezolutie (pas minim) [dB]	nr pasi	castig maxim [dB]	Rintrare minim
5	7	3	4	16	

Figura 24 - Specificatii individuale etaj3

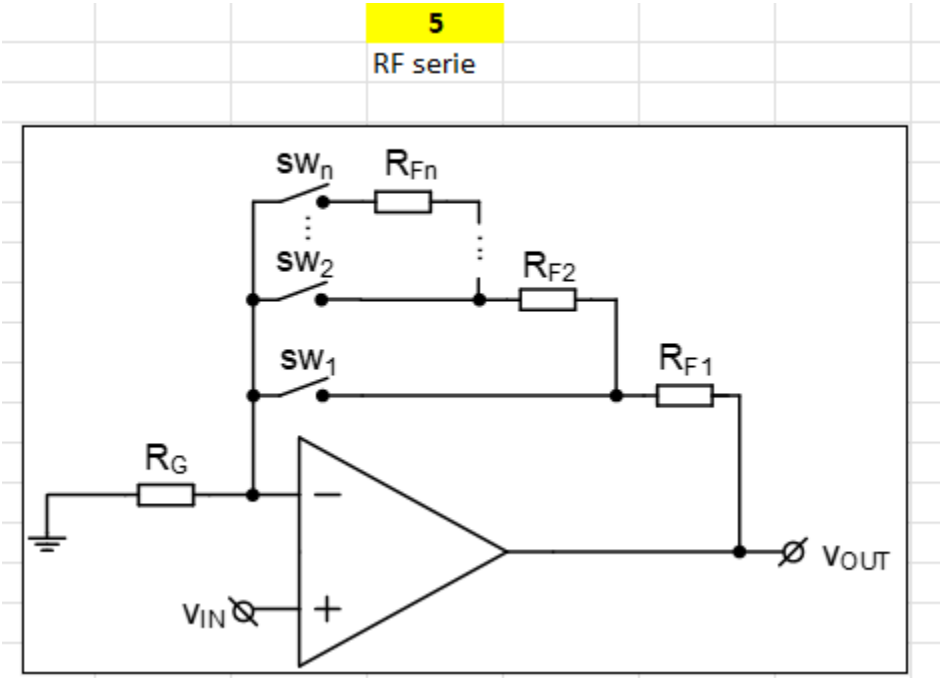

Figura 25 – Tip etaj3

Schema circuit:

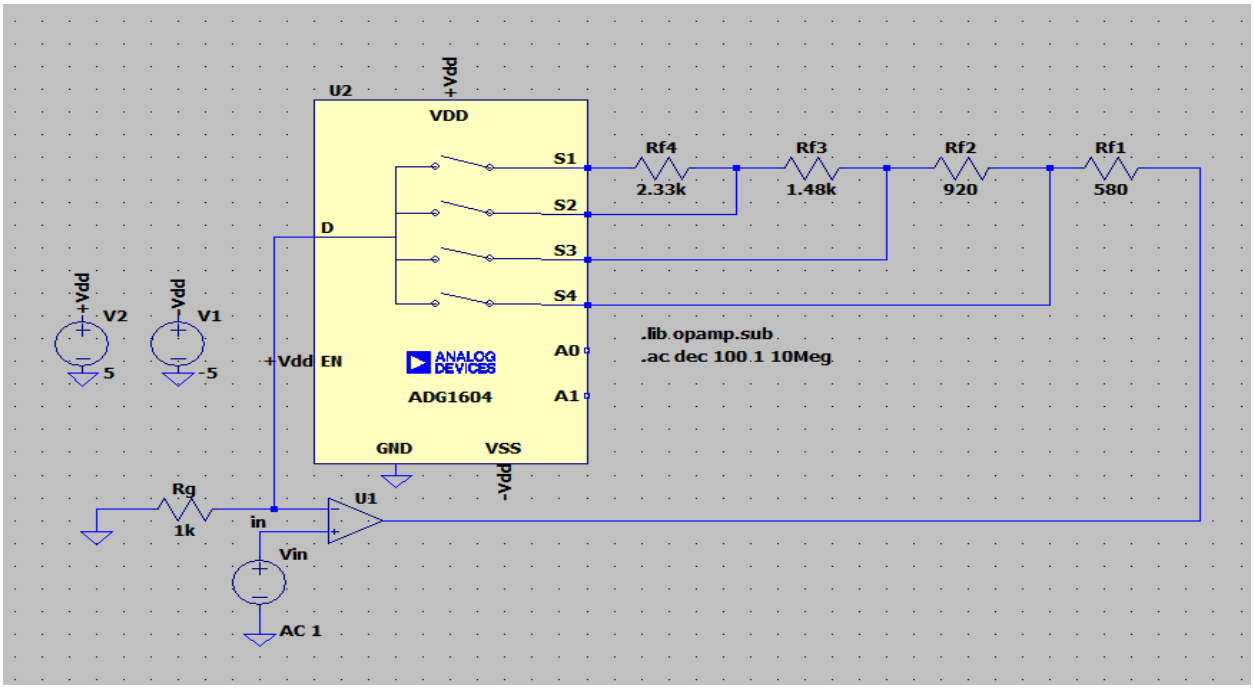

Figura 26 – PGA Schema circuit

Dimensionare:

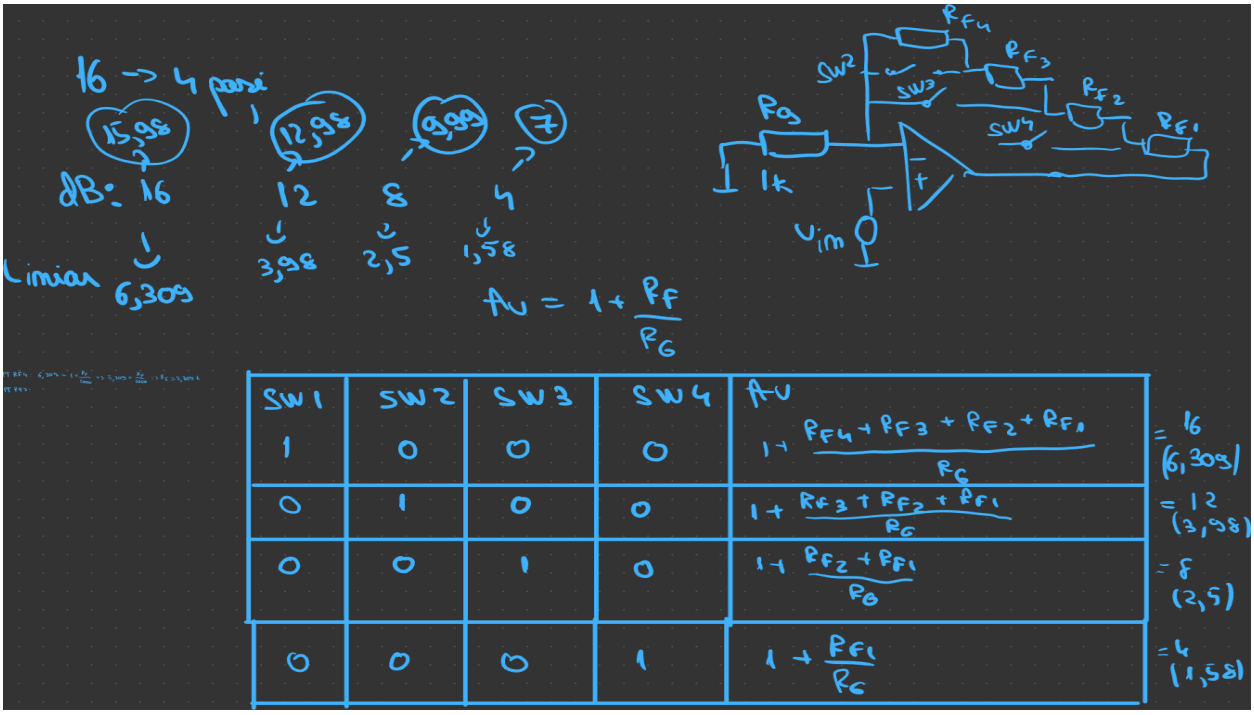

PT R_{F1} : $1 + \frac{R_{F1}}{R_G} = 1{,}58 = \frac{R_{F1}}{R_G} = 0{,}58 \Rightarrow R_{F1} = 580\,\Omega$

PT R_{F2} : $1 + \frac{R_{F2}+R_{F1}}{R_G} = 2{,}5 \Rightarrow \frac{R_{F2}+R_{F1}}{R_G} = 1{,}5 \Rightarrow R_{F2}+R_{F1} = 1{,}5\,k$

$\Rightarrow R_{F2} = 1{,}5\,k - 580\,\Omega$

$= R_{F2} = 920$

PT R_{F3} : $1 + \frac{R_{F3}+R_{F2}+R_{F1}}{R_G} \approx 3{,}98 \Rightarrow R_{F3}+R_{F2}+R_{F1} = 2{,}98\,k$

$\Rightarrow R_{F3} = 2{,}98\,k - 580 - 920$

$\Rightarrow R_{F3} = 1{,}48\,k$

PT R_{F4} : $1 + \frac{R_{F4}+R_{F3}+R_{F2}+R_{F1}}{R_G} = 6{,}309 \Rightarrow R_{F4}+R_{F3}+R_{F2}+R_{F1} = 5{,}309\,k$

$\Rightarrow R_{F4} = 5{,}309\,k - 1{,}48\,k - 580 - 920$

$\Rightarrow R_{F4} = 2{,}33\,k$

Simulari:

- DCOP

Punct static de functionare:

D:\Dinca\PROIECTE\ProiectSCIA\Etaj3\Etaj3Sim\Etaj3.net

```
        --- Operating Point ---

V(+vdd):        5               voltage
V(-vdd):        -5              voltage
V(in):          0               voltage
V(n001):        0               voltage
V(n002):        0               voltage
V(n003):        0               voltage
V(n004):        0               voltage
V(n005):        0               voltage
V(n006):        0               voltage
V(nc_01):       0               voltage
V(nc_02):       0               voltage
I(Rf1):         0               device_current
I(Rf2):         0               device_current
I(Rf3):         0               device_current
I(Rf4):         0               device_current
I(Rg):          0               device_current
I(V1):          2.77803e-10     device_current
I(V2):          -2.77803e-10    device_current
I(Vin):         0               device_current
Ix(u1:3):       0               subckt_current
Ix(u2:1):       2.77803e-10     subckt_current
Ix(u2:10):      0               subckt_current
Ix(u2:11):      5.68434e-14     subckt_current
Ix(u2:2):       0               subckt_current
Ix(u2:3):       0               subckt_current
Ix(u2:4):       4e-23           subckt_current
Ix(u2:5):       -2.77803e-10    subckt_current
Ix(u2:6):       0               subckt_current
Ix(u2:7):       0               subckt_current
Ix(u2:8):       0               subckt_current
Ix(u2:9):       0               subckt_current
```

Figura 27 – PGA OP

- AC

Amplificare SW-1 ON:

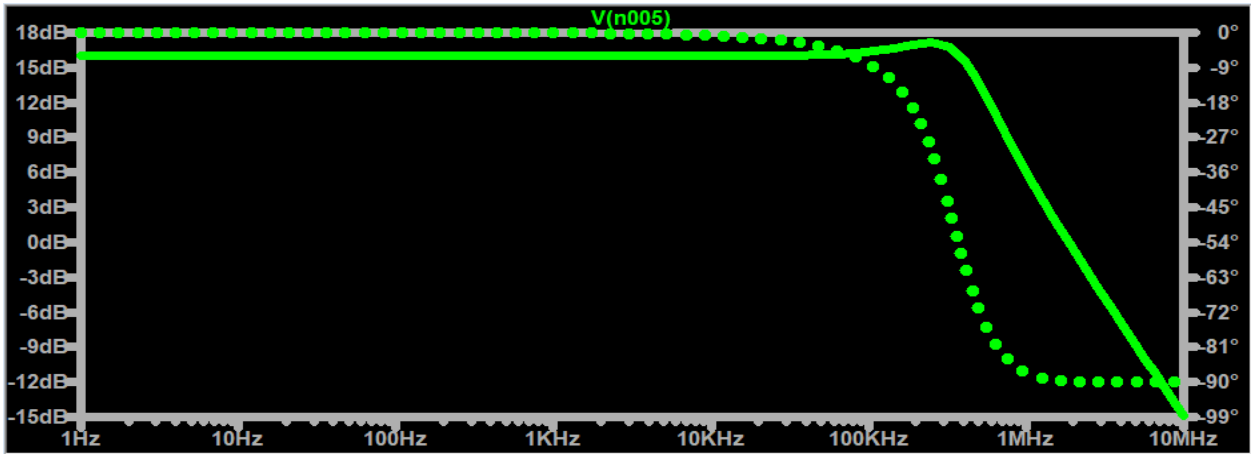

Figura 28 – PGA sw1-on

Masurare amplificare SW-1 ON:

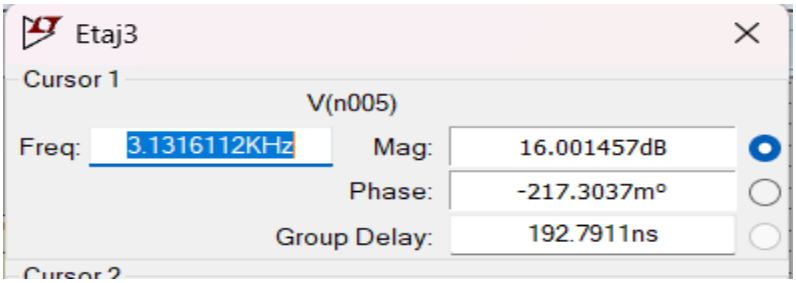

Figura 29 – PGA sw1-on amplificare max

Amplificare SW-2 ON:

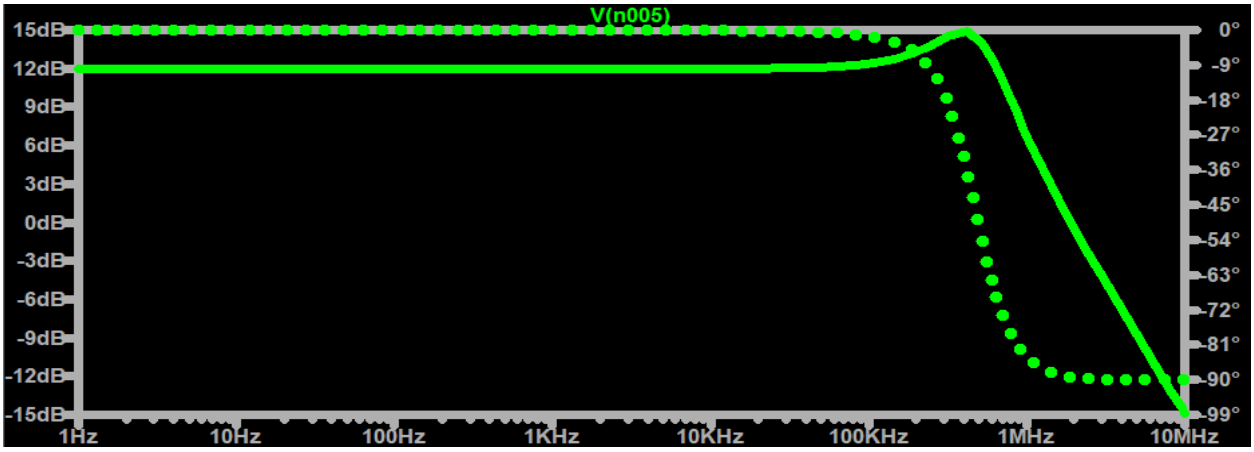

Figura 30 – PGA sw2-on

Masurare amplificare SW-2 ON:

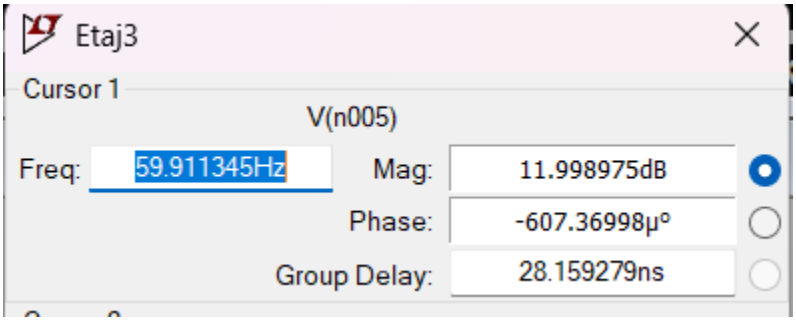

Figura 31 – PGA sw2-on amplificare

Amplificare SW-3 ON:

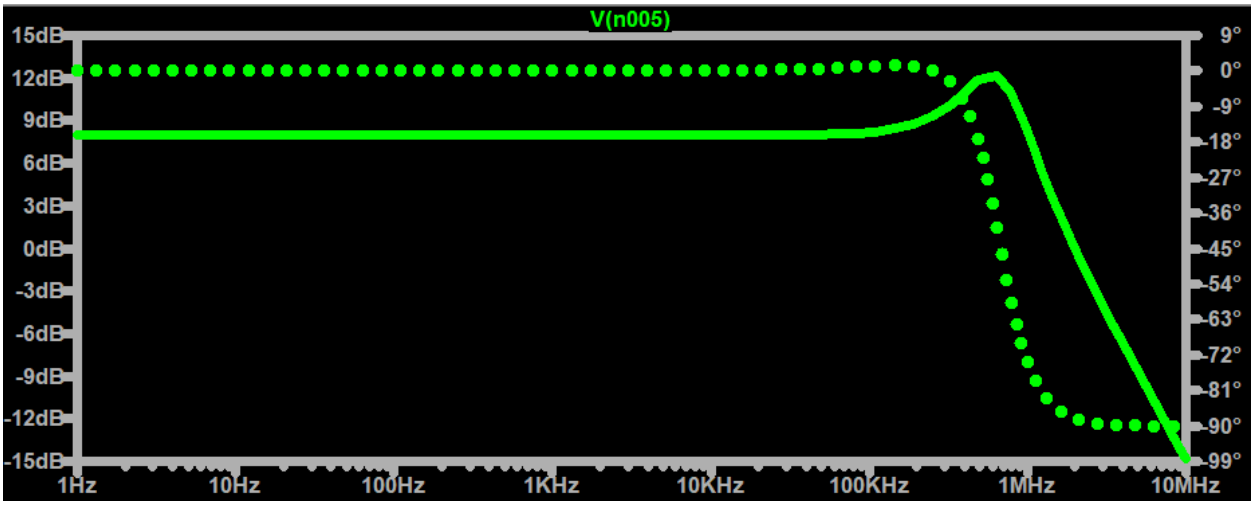

Figura 32 – PGA sw3-on

Masurare amplificare SW-3 ON:

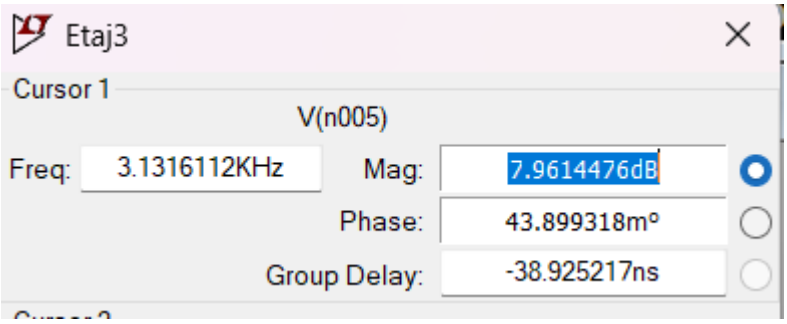

Figura 33 – PGA sw3-on amplificare

Amplificare SW-4 ON:

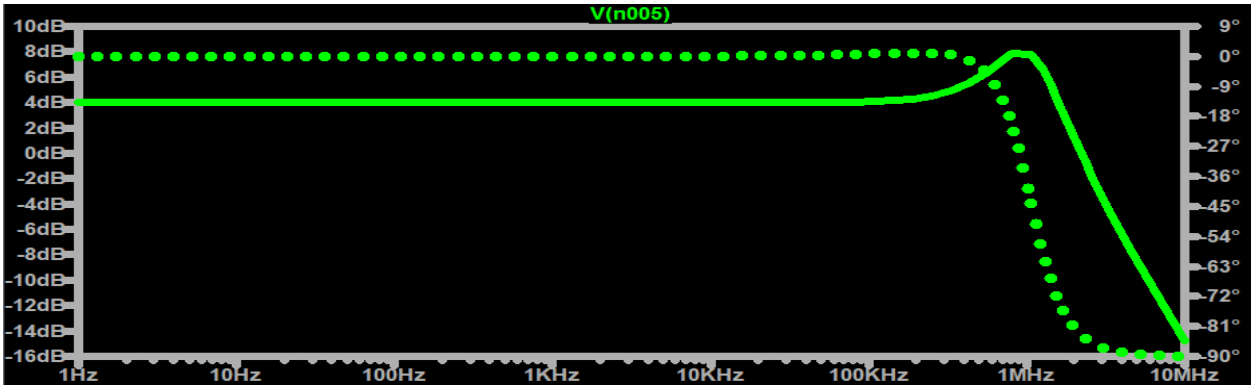

Figura 34 – PGA sw4-on

Masurare amplifiacre SW-4 ON:

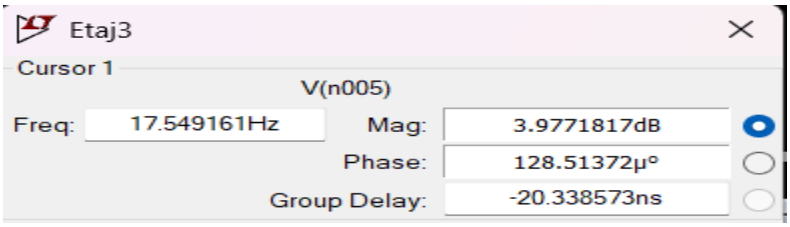

Figura 35 – PGA sw4-on amplificare min

- Transient

Configurarea surselor dupa primele 2 etaje pentru masurare amplifiacre minima si maxima:

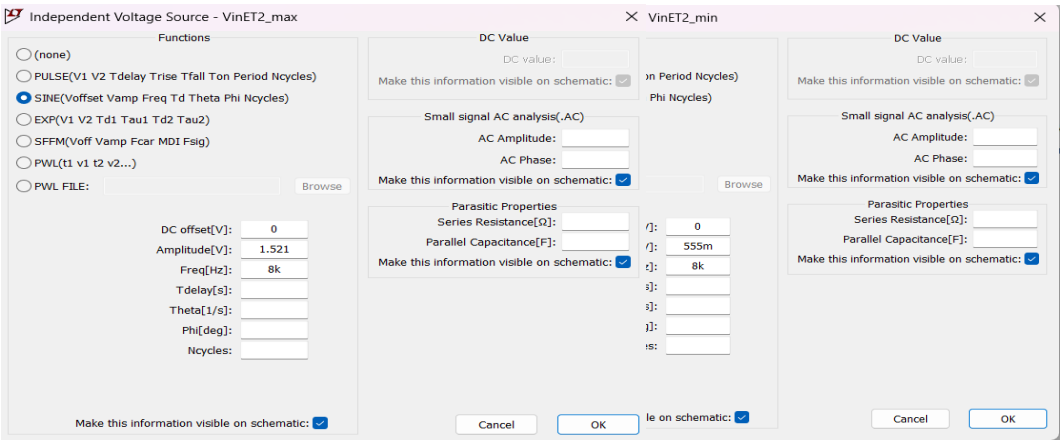

Figura 35.1 – Vin min si Vin max

Vout la amplificare maxima(Vin min):

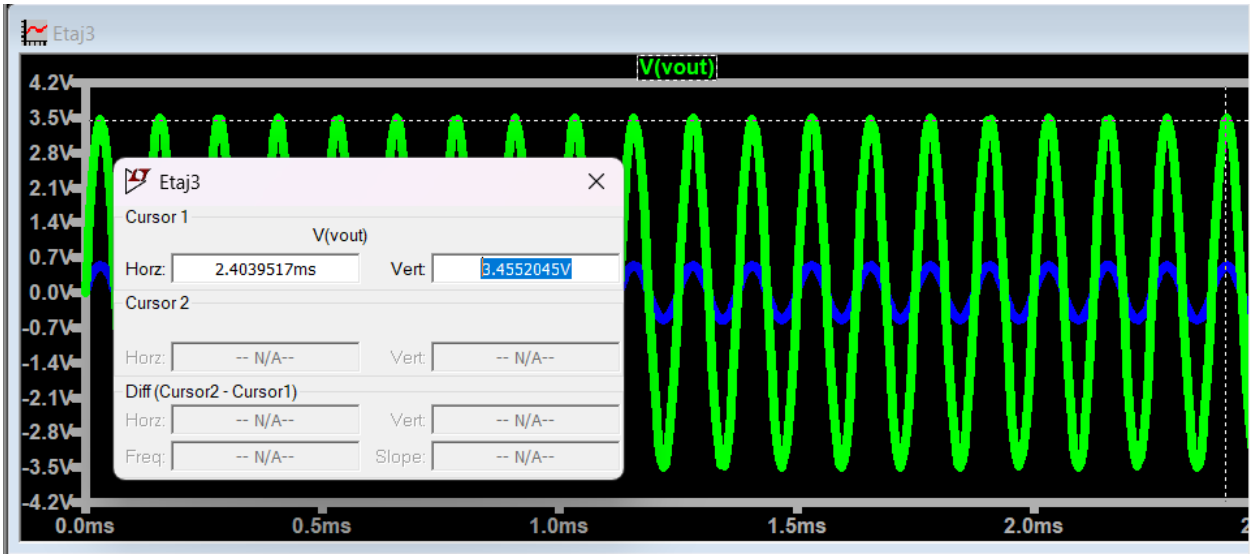

Figura 36 – PGA Liniaritate amplificare maxima

FFT:

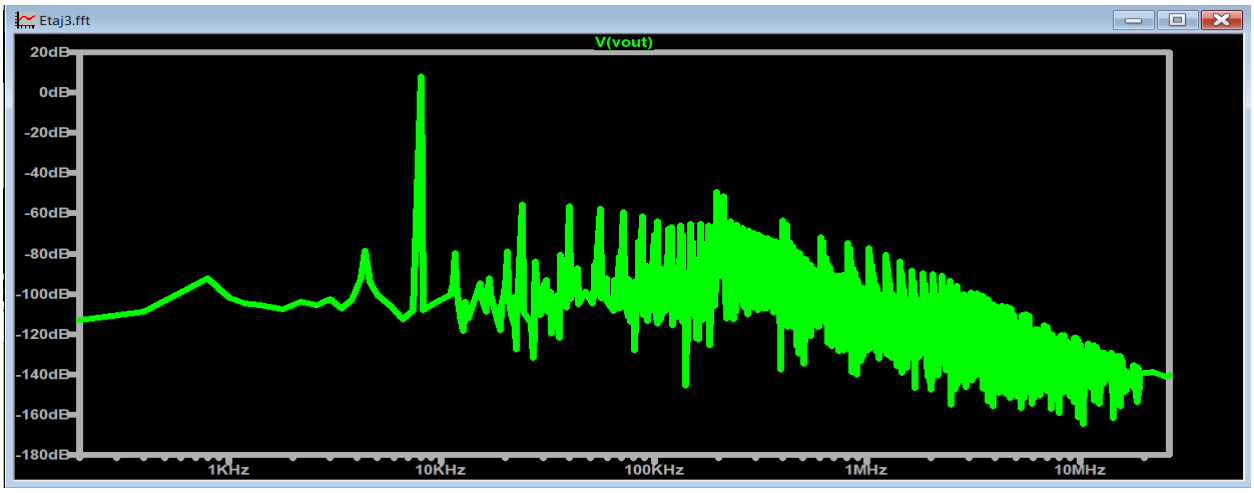

Figura 37 – PGA FFT

Masurare THD amplificare maxima:

Harmonic Number	Frequency [Hz]	Fourier Component	Normalized Component	Phase [degree]	Normalized Phase [deg]
1	8.000e+03	3.488e+00	1.000e+00	90.56Â°	0.00Â°
2	1.600e+04	5.590e-06	1.603e-06	79.66Â°	-10.90Â°
3	2.400e+04	2.307e-03	6.613e-04	-72.34Â°	-162.90Â°
4	3.200e+04	6.505e-06	1.865e-06	103.11Â°	12.55Â°
5	4.000e+04	2.120e-03	6.079e-04	119.19Â°	28.63Â°
6	4.800e+04	1.215e-05	3.483e-06	136.58Â°	46.02Â°
7	5.600e+04	1.828e-03	5.240e-04	-49.69Â°	-140.25Â°
8	6.400e+04	9.467e-06	2.714e-06	167.32Â°	76.76Â°
9	7.200e+04	1.532e-03	4.393e-04	141.39Â°	50.83Â°
10	8.000e+04	1.350e-05	3.870e-06	-179.03Â°	-269.60Â°

Partial Harmonic Distortion: 0.112890%
Total Harmonic Distortion: 0.239299%

Figura 38 – THD Amplificare maxima

Vout la amplificare minima(Vin max):

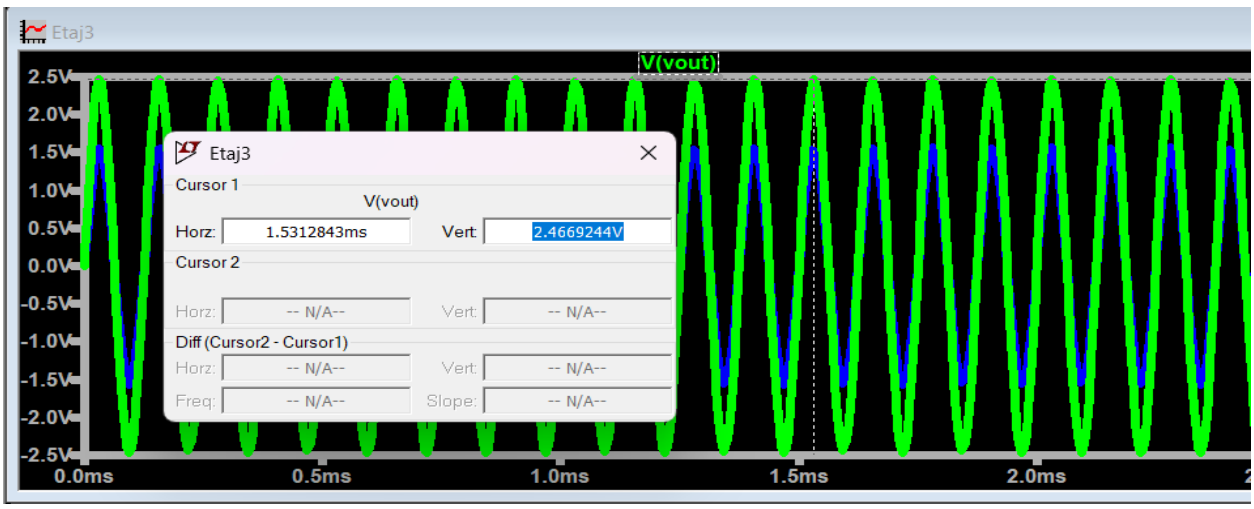

Figura 39 – PGA Liniaritate amplificare minima

FFT:

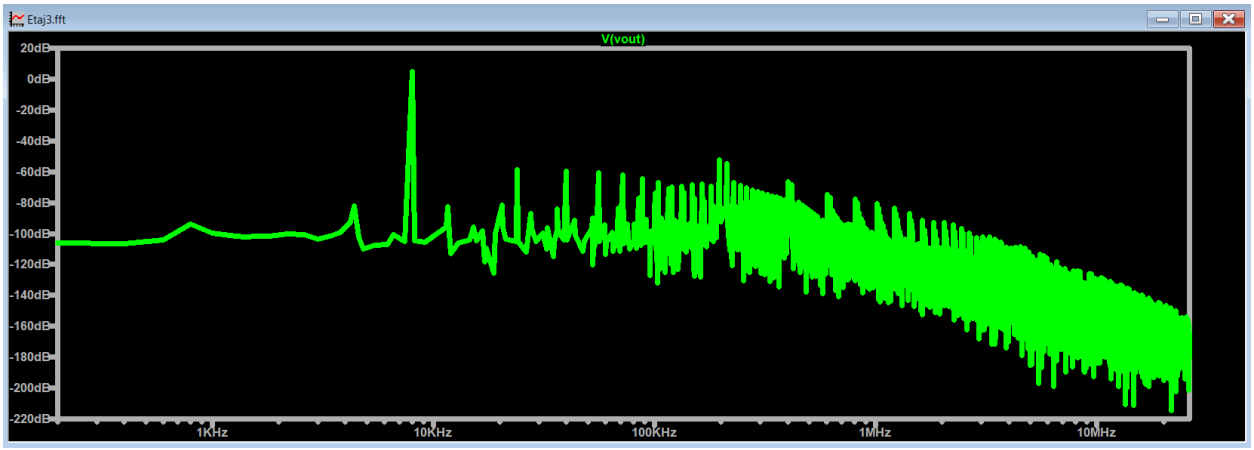

Figura 40 – PGA FFT

Masurare THD masurare amplificare minima:

Harmonic Number	Frequency [Hz]	Fourier Component	Normalized Component	Phase [degree]	Normalized Phase [deg]
1	8.000e+03	2.460e+00	1.000e+00	89.95Â°	0.00Â°
2	1.600e+04	8.445e-06	3.432e-06	41.97Â°	-47.97Â°
3	2.400e+04	1.632e-03	6.634e-04	-72.25Â°	-162.20Â°
4	3.200e+04	8.365e-06	3.400e-06	89.74Â°	-0.20Â°
5	4.000e+04	1.499e-03	6.091e-04	119.08Â°	29.14Â°
6	4.800e+04	8.225e-06	3.343e-06	122.24Â°	32.29Â°
7	5.600e+04	1.290e-03	5.244e-04	-49.64Â°	-139.58Â°
8	6.400e+04	8.304e-06	3.375e-06	160.31Â°	70.37Â°
9	7.200e+04	1.082e-03	4.399e-04	141.35Â°	51.40Â°
10	8.000e+04	4.366e-06	1.775e-06	-178.33Â°	-268.28Â°

Partial Harmonic Distortion: 0.113123%
Total Harmonic Distortion: 0.239250%

Figura 41 – THD Amplificare minima

Etaj 4 – Redresor

Specificatii individuale:

Etaj 4		AO
tip Etaj 4	|Castig| etaj 4 (liniar)	Tip AO
10	1	11

Figura 42 - Specificatii individuale etaj4

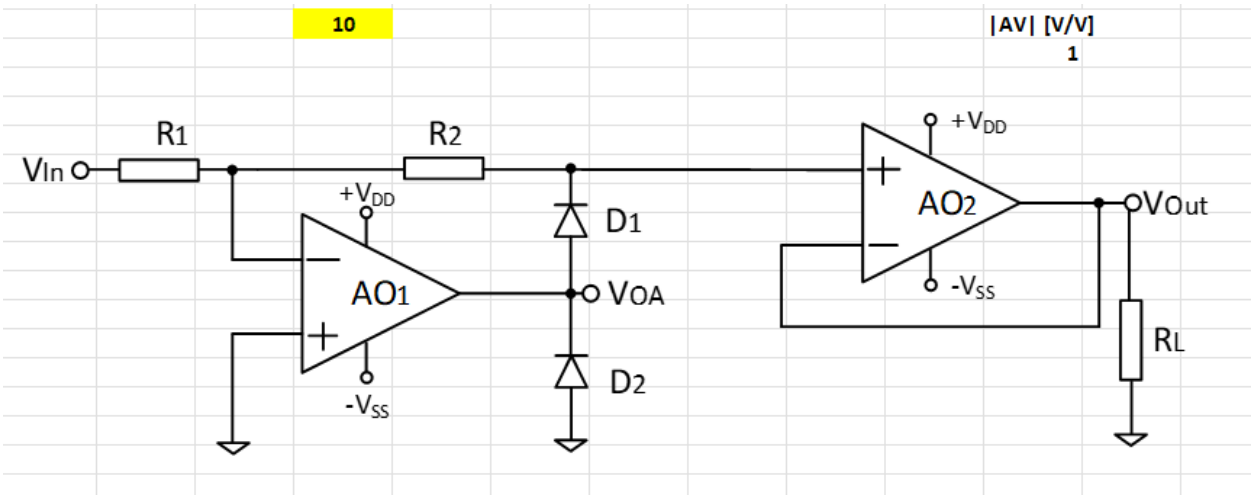

Figura 43 – Tip etaj4

Schema circuit si dimensionare:

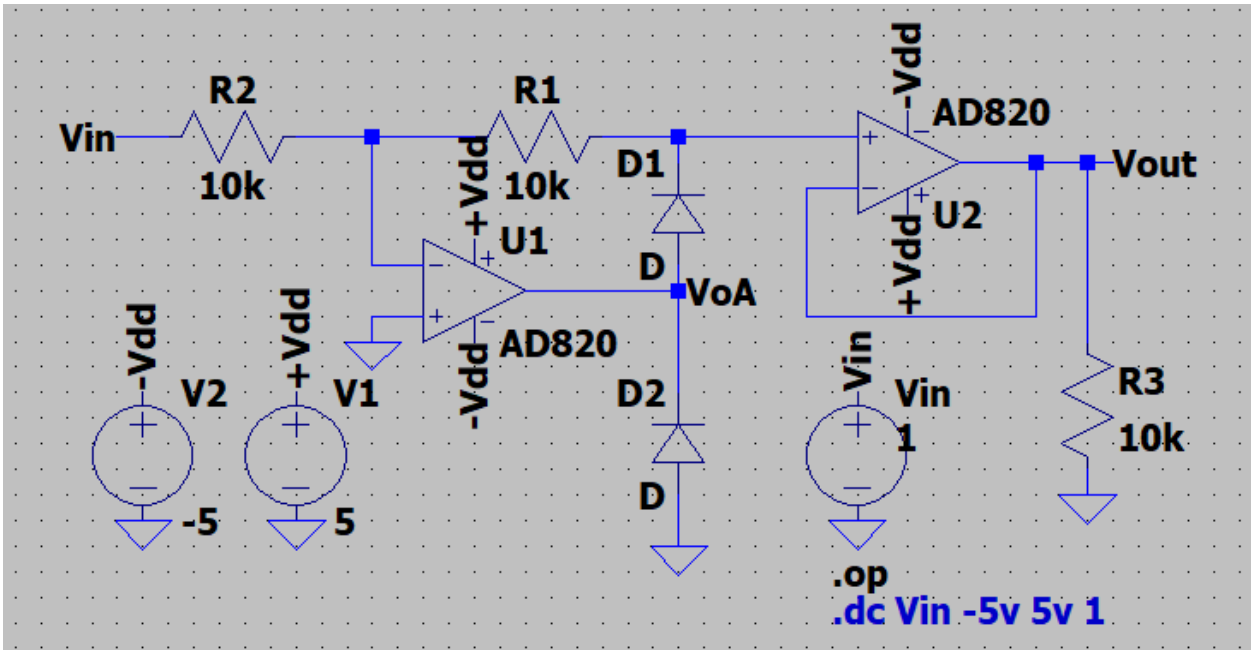

Figura 44 –Schema circuit etaj4

Simulari:

- DCOP

Punct static de functionare:

D:\Dinca\PROIECTE\ProiectSCIA\Etaj4\Etaj4Sim\Etaj4.net

```
       --- Operating Point ---

V(+vdd):        5               voltage
V(-vdd):        -5              voltage
V(n001):        1               voltage
V(n002):        1               voltage
V(vin):         1               voltage
V(voa):         -0.753578       voltage
V(vout):        0.999997        voltage
I(D1):          -1.76358e-12    device_current
I(D2):          0.0449998       device_current
I(R1):          -3.81358e-12    device_current
I(R2):          -5.93848e-12    device_current
I(R3):          9.99997e-05     device_current
I(V1):          -0.00150387     device_current
I(V2):          0.0464077       device_current
I(Vin):         -5.93848e-12    device_current
Ix(u1:1):       1.92509e-12     subckt_current
Ix(u1:2):       2.12491e-12     subckt_current
Ix(u1:3):       0.000700903     subckt_current
Ix(u1:4):       -0.0457048      subckt_current
Ix(u1:5):       0.0449998       subckt_current
Ix(u2:1):       2.05e-12        subckt_current
Ix(u2:2):       2.05e-12        subckt_current
Ix(u2:3):       0.000802969     subckt_current
Ix(u2:4):       -0.000702969    subckt_current
Ix(u2:5):       -9.99997e-05    subckt_current
```

Figura 45 – OP

- DC SWEEP

Caracteristica DC a circuitului:

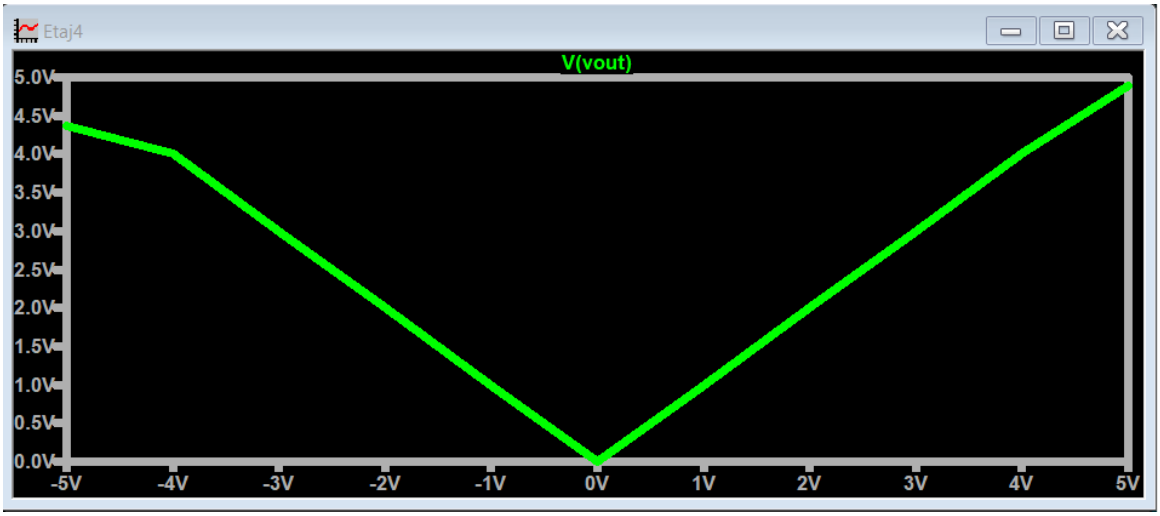

Figura 45 – DC Sweep

- Transient

Indeplinirea functiei de circuit pentru amplificare minima si pentru amplificare maxima:

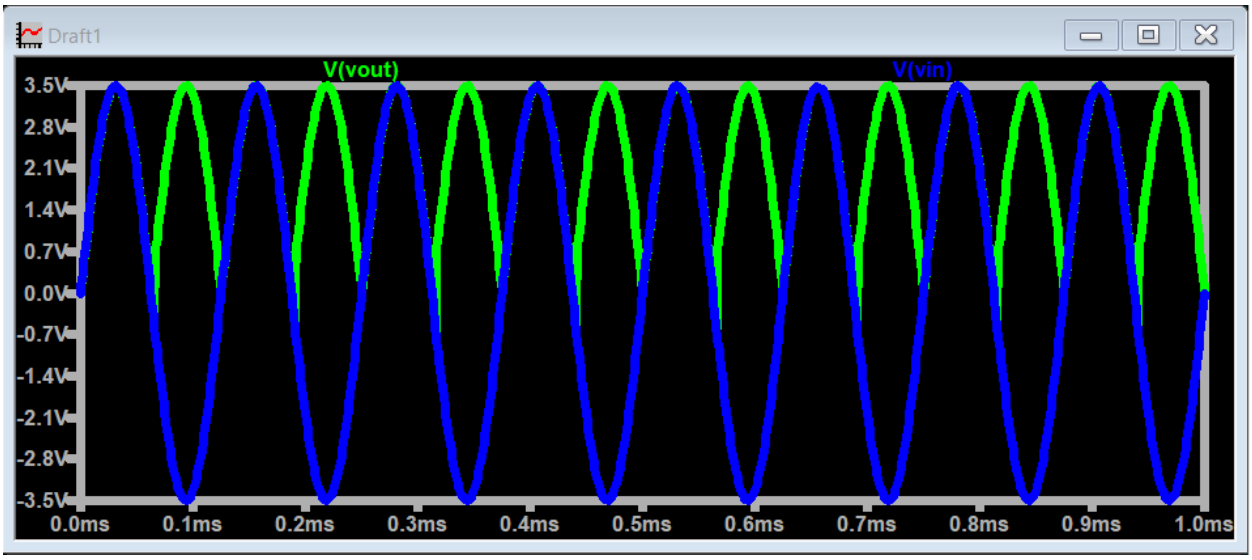

Figura 46 – Functia de redresor amplificare maxima

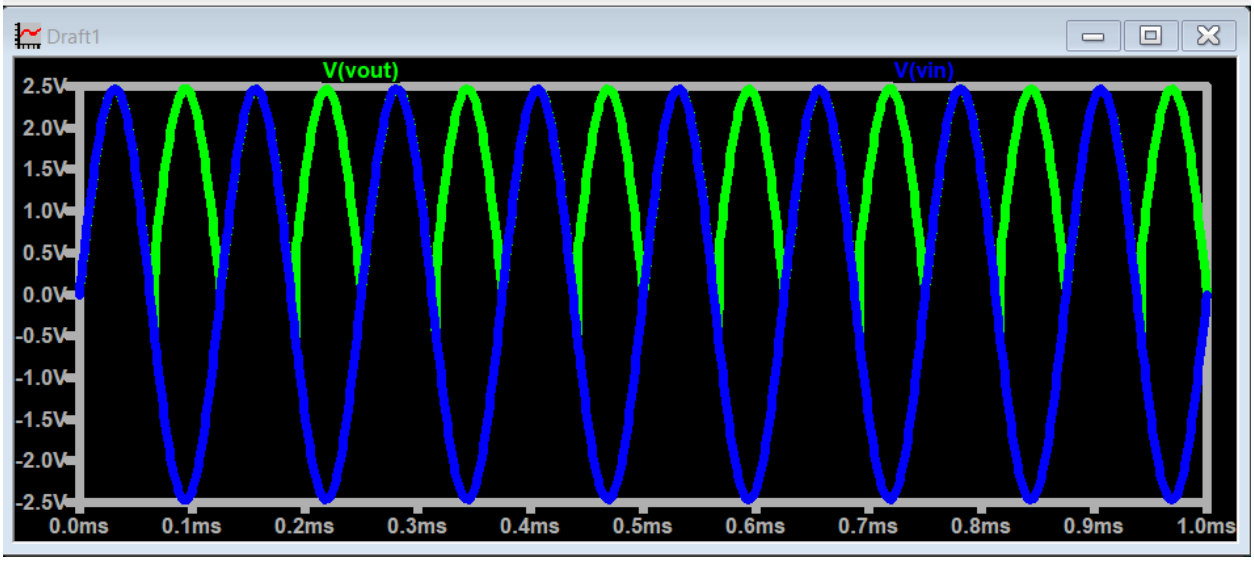

Figura 47 – Functia de redresor amplificare minima

Capitolul 3. Implementare circuit

Etajul 1

Amplificare etaj1:

Figura 48 – Amplificare etaj1

Calcul amplificare etaj1:

$$\frac{V_{out}}{V_{in}} = \frac{4{,}443}{1{,}443} = 3{,}07$$

Masurare banda etaj1:

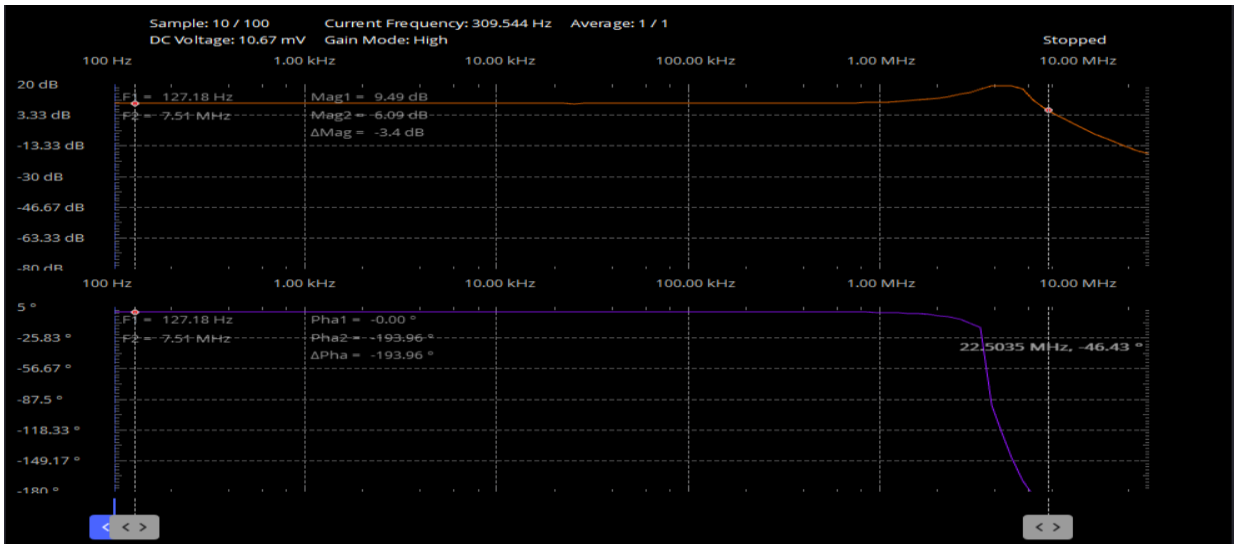

Figura 49 – Castig banda etaj1

GBW pentru LT1357 este de 25Mhz:

$$\frac{25Mhz}{3} \cong 8Mhz$$

SR etaj1(SR-ul tipic al AO este de 600V/us):

Figura 49.1 – SR etaj1

Calculul SR:

$$Slew\ Rate = \frac{\Delta V}{\Delta t} = \frac{2.722\ V}{9.375\ ns} = 0.290\ V/ns = 290\ V/\mu s$$

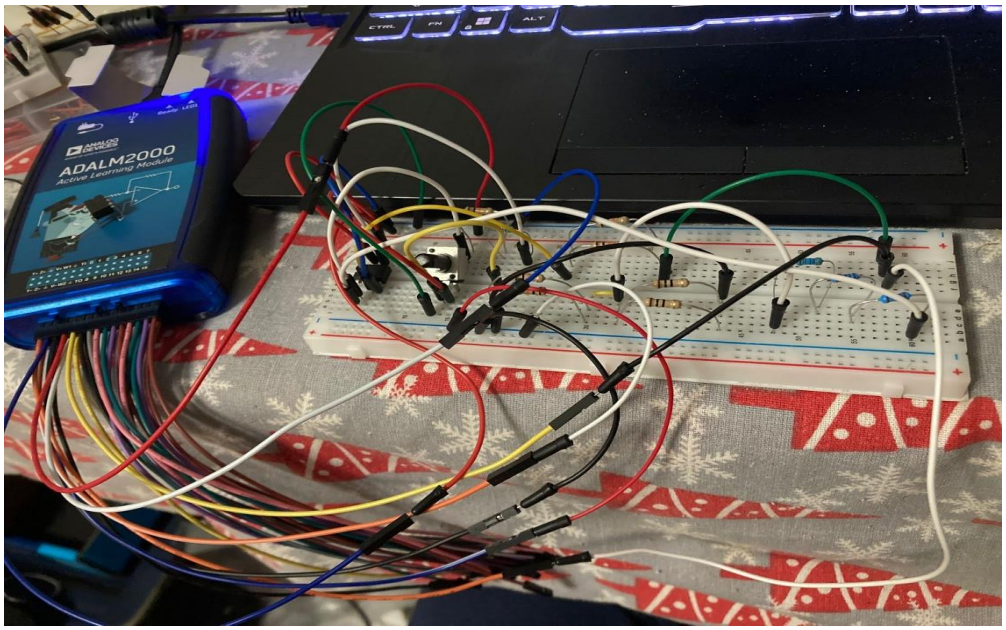

Etajul 2

Amplificare etaj2:

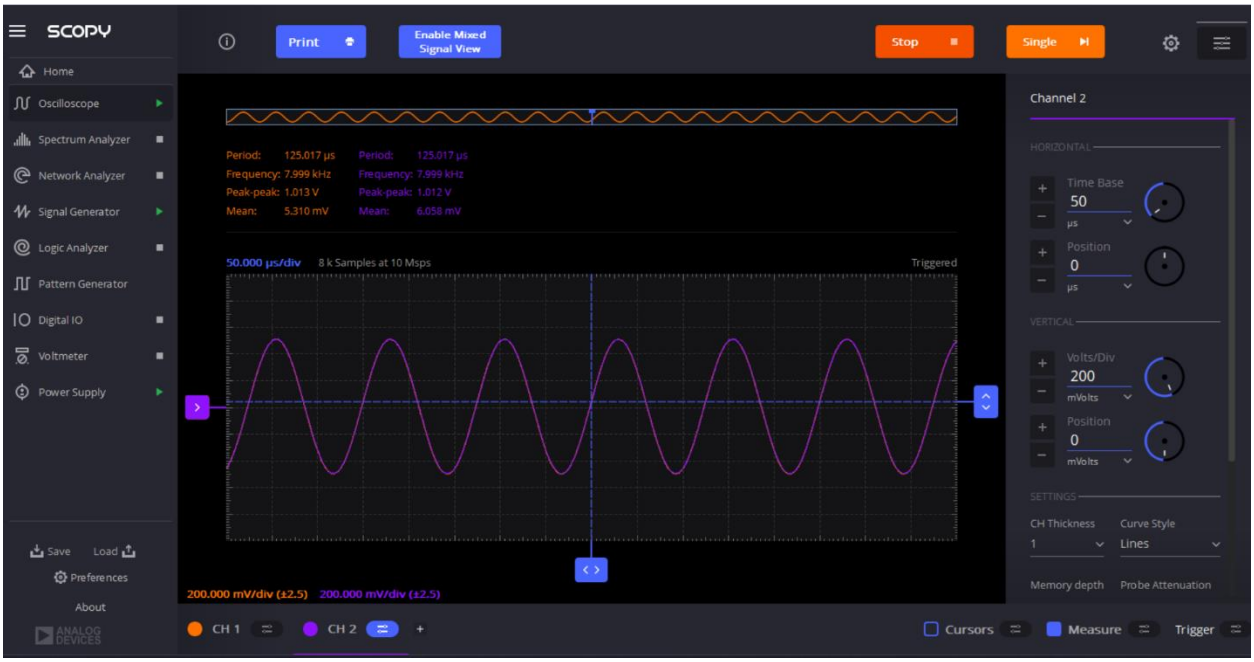

Figura 49 – Amplificare etaj2

Banda etaj2:

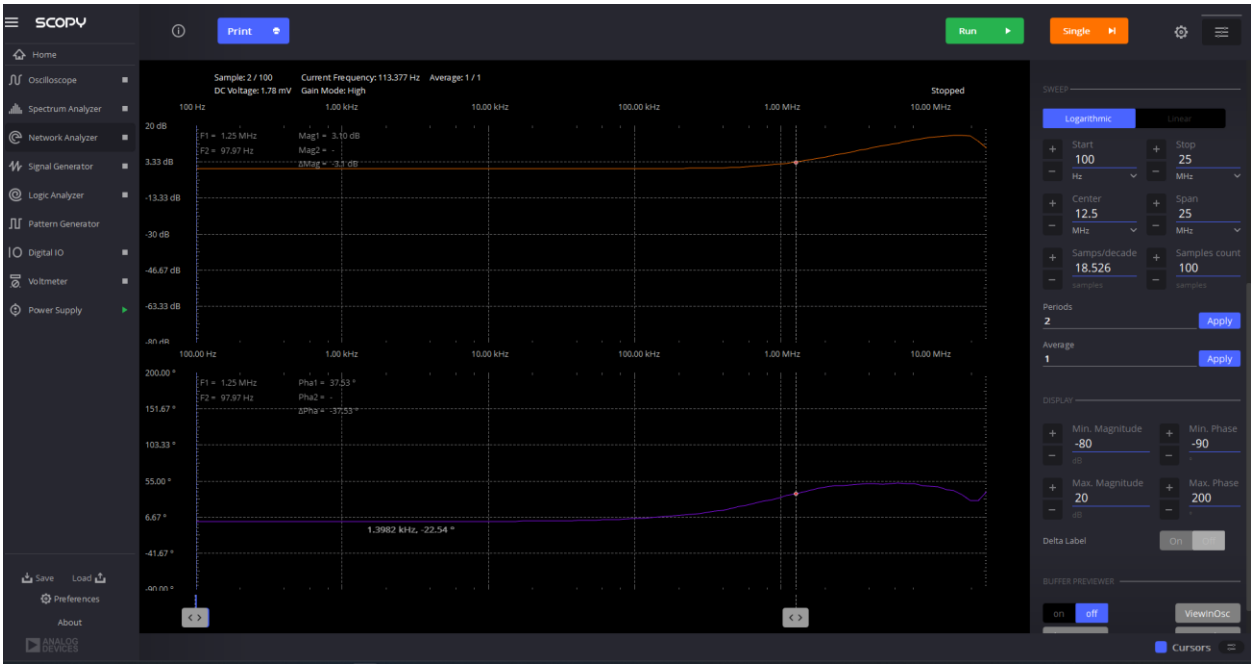

Figura 50 – Banda de trecere

Atenuarea semnalelor la frecvente mari(1Mhz):

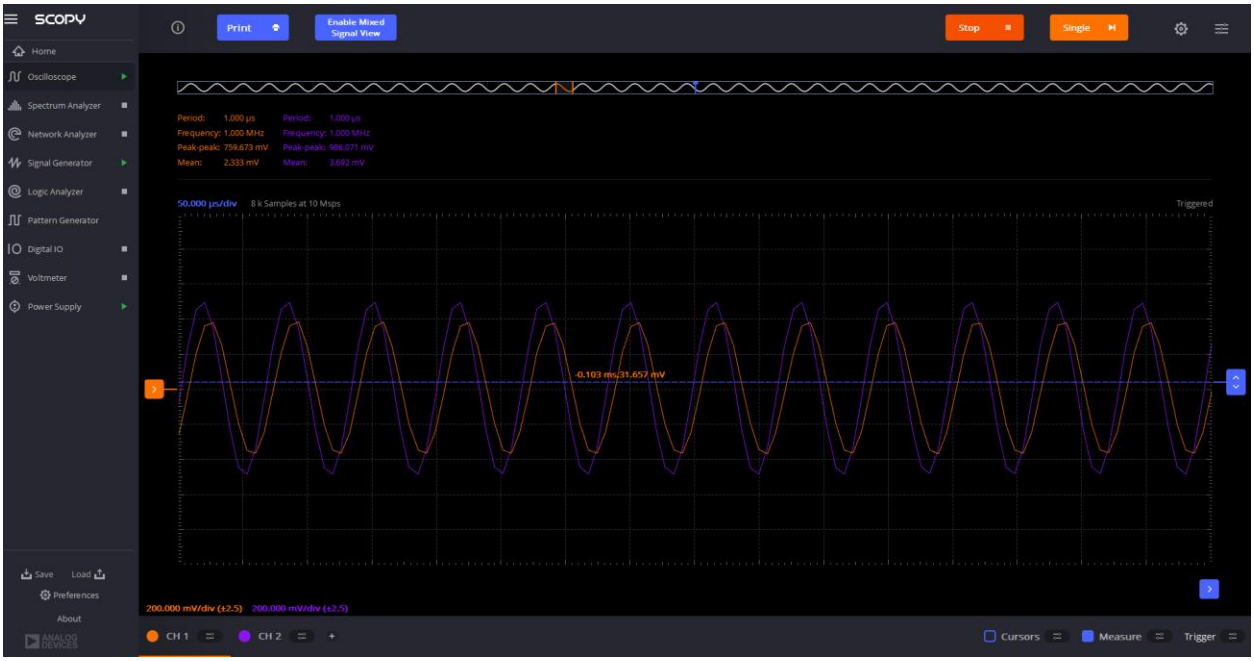

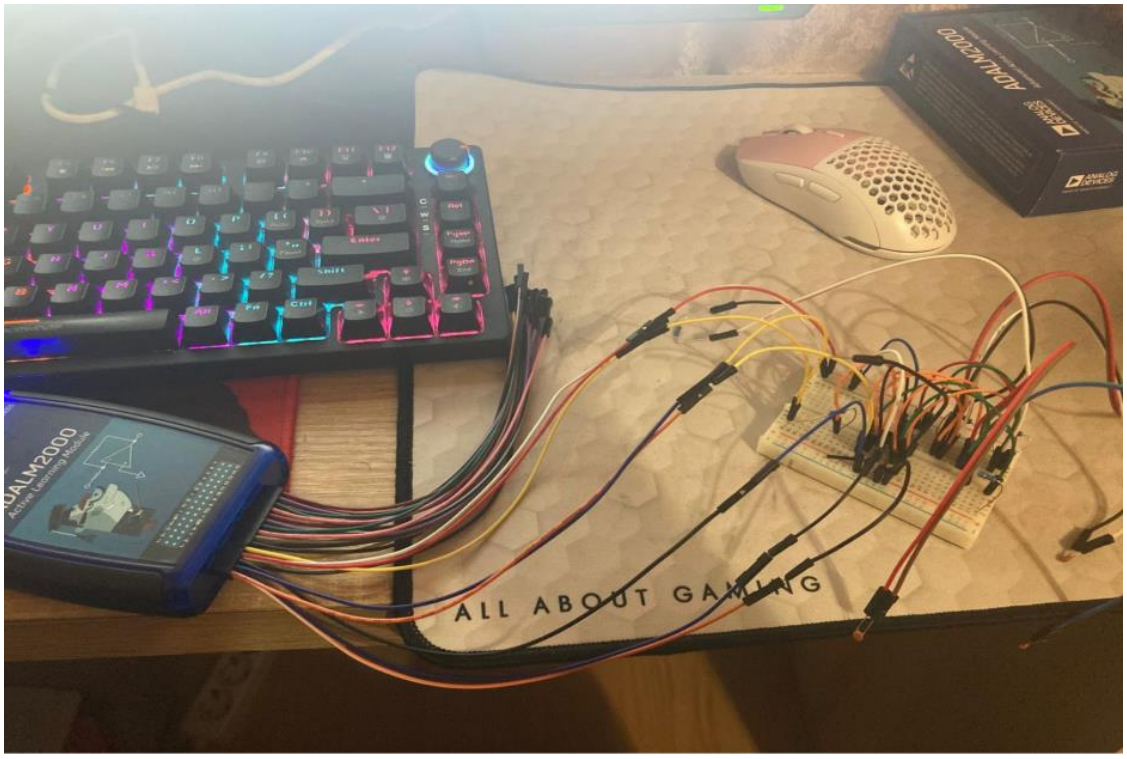

Etajul 4

Indeplinirea functiei circuitului:

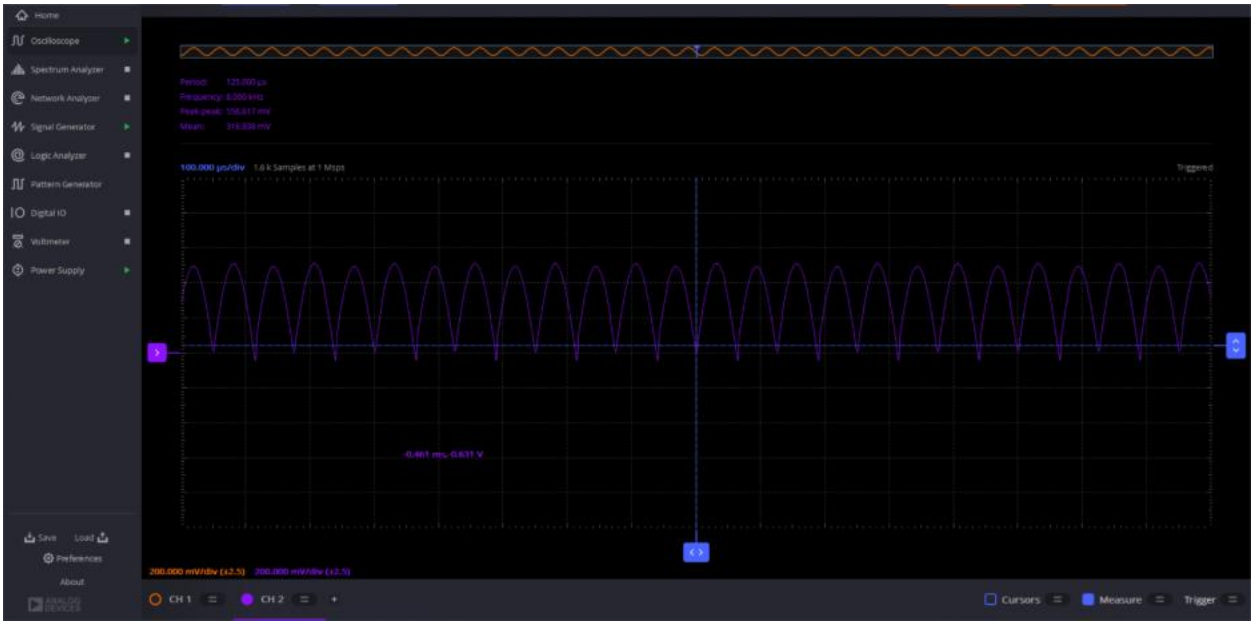

Figura 51 – Redresarea semnalului

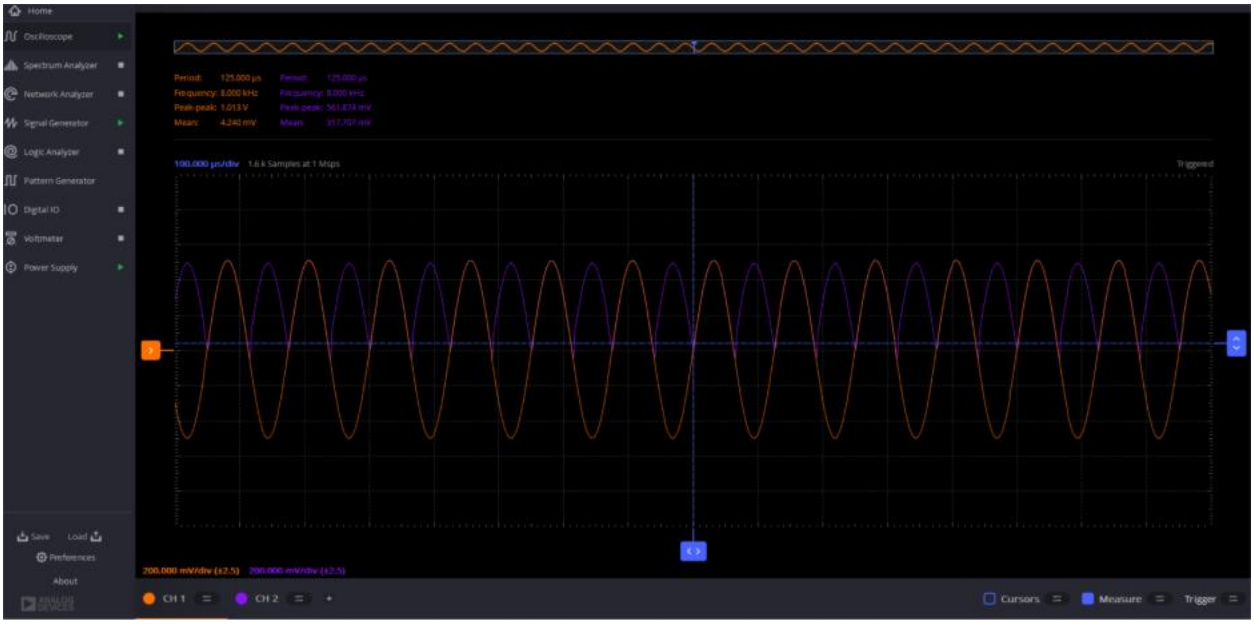

Figura 52 – Vin si Vout

Circuitul

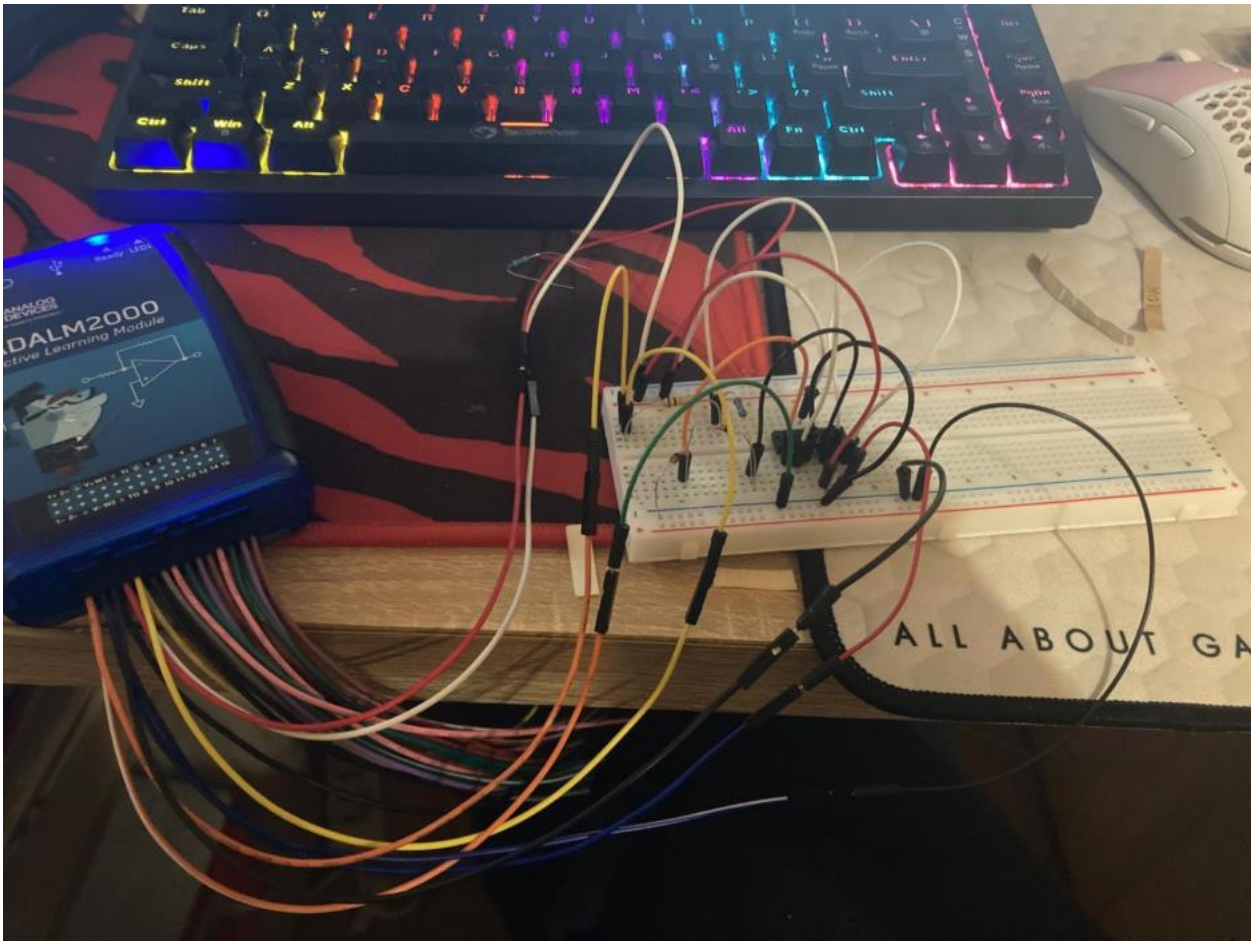

Figura 53– Circuitul