No: Date: / /

Assignment 1

1 a) $$\frac{d\,soc(t)}{dt} = \frac{i(t)}{Q}$$

$$V_{oc}(t) = k\, soc(t)$$

b)

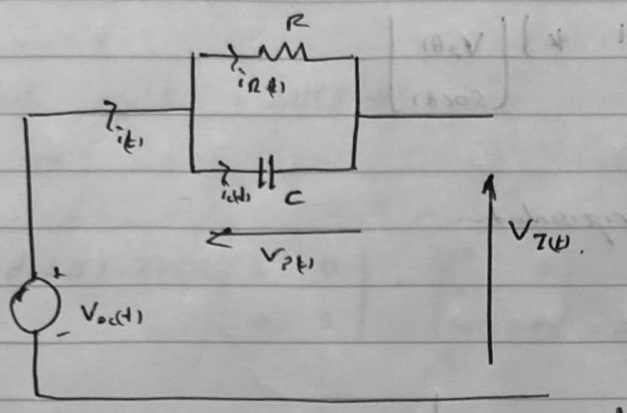

$$i(t) = i_R(t) + i_c(t)$$

$$i(t) = \frac{V_p(t)}{R} + C\frac{dV_p(t)}{dt} \quad -(1)$$

~~$V_{oc}(t)$~~

$$\frac{dV_p(t)}{dt} = \frac{-1}{RC} V_p(t) + \frac{1}{C} i(t).$$

$$\frac{d\,soc(t)}{dt} = \frac{i(t)}{Q}$$

$$\begin{bmatrix} \frac{dV_p(t)}{dt} \\ \frac{d\,soc(t)}{dt} \end{bmatrix} = \begin{bmatrix} \frac{-1}{RC} & 0 \\ 0 & 0 \end{bmatrix} \begin{bmatrix} V_p(t) \\ soc(t) \end{bmatrix} + \begin{bmatrix} \frac{1}{C} \\ \frac{1}{Q} \end{bmatrix} i(t)$$

Scanned with CamScanner

No: Date: / /

$V_{q(t)} = V_{o(t)} + V_{p(t)}$

$= k\,SOC(t) - V_p(t)$.

$\cancel{[V_{q(t)}] = [k \quad -1]}$

$[V_{q(t)}] = [-1 \quad k]\begin{bmatrix} V_p(t) \\ SOC(t) \end{bmatrix}$

Therefore state space representation.

$$\begin{bmatrix} \frac{dV_p(t)}{dt} \\ \frac{d\,SOC(t)}{dt} \end{bmatrix} = \begin{bmatrix} -\frac{1}{RC} & 0 \\ 0 & 0 \end{bmatrix}\begin{bmatrix} V_p(t) \\ SOC(t) \end{bmatrix} + \begin{bmatrix} \frac{1}{C} \\ \frac{1}{Q} \end{bmatrix} i(t)$$

$[V_{q(t)}] = [-1 \quad k]\begin{bmatrix} V_p(t) \\ SOC(t) \end{bmatrix}$

b) $Y(t) = Cx(t) + Du(t)$. $Du(t) = 0$

$y(t) = Cx(t)$

$\frac{dx(t)}{dt} = Ax(t) + Bu(t)$.

$sX(s) = AX(s) + BU(s)$

$X(s) = (sI - A)^{-1} B\,U(s)$

No: _____ Date: __/__/____

$$Y(s) = C\,X(s)$$

$$= C(sI - A)^{-1} B\,U(s)$$

$$Y(s) = C\,\frac{\operatorname{adj}(sI-A)}{\det(sI-A)}\,B\,U(s)$$

Characteristic equation $= \det(sI - A)$

$$\det(sI - A) = \det\left[\begin{matrix} s & 0 \\ 0 & s \end{matrix}\right] - \left[\begin{matrix} \frac{1}{RC} & 0 \\ 0 & 0 \end{matrix}\right]$$

$$= \det\left[\begin{matrix} s - \frac{1}{RC} & 0 \\ 0 & s \end{matrix}\right]$$

$$= \cancel{\frac{1}{s\left(s - \frac{1}{RC}\right)}}$$

$$= \cancel{\frac{RC}{s^2RC - 1}}$$

$$= s\left(s - \frac{1}{RC}\right)$$

$$= s^2 - \frac{s}{RC}$$

No: Date: / /

c).

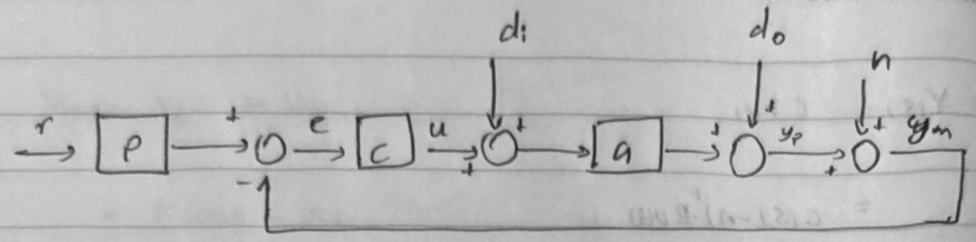

when $d_i(t) = d_o(t) = n(t) = 0$.

$$T_r(s) = P(s) \cdot \frac{C(s)\,G(s)}{1 + C(s)G(s)} \qquad S(s) = \frac{1}{1 + G(s)\,C(s)}$$

$$\frac{Y_p(s)}{r(s)} = P(s) \cdot T(s) \quad -① \qquad T(s) = \frac{G(s)\,C(s)}{1 + G(s)\,C(s)}$$

when $r(t) = d_o(t) = n(t) = 0$.

$$T_{d_i}(s) = \frac{G(s)}{1 + G(s)\,C(s)}$$

$$= G(s) \cdot S(s) \quad -②$$

when $r(t) = d_i(t) = n(t) = 0$.

$$T_{d_o}(s) = \frac{1}{1 + G(s)\,C(s)}$$

$$T_{d_o}(s) = S(s) \quad -③$$

when $r(t) = d_o(t) = d_i(t) = 0$.

$$T_n(s) = \frac{-G(s) \cdot C(s)}{1 + G(s)\,C(s)}$$

$$= -T(s) \quad -④$$

Scanned with CamScanner

No : Date: / /

according to superposition theorem.

$$Y_{p.}(s) = T_{r(s)}\, r(s) + T_{d_i(s)}\, D_i(s) + T_{d_o(s)}\, D_o(s) + - T_{n_o(s)}\, N_o(s)$$

$$= P(s)\, T(s)\, r(s) + G(s)\, S(s)\, D_i(s) + S(s)\, D_o(s) - \cancel{T(s)\, N(s)}$$

Scanned with CamScanner

Q6).

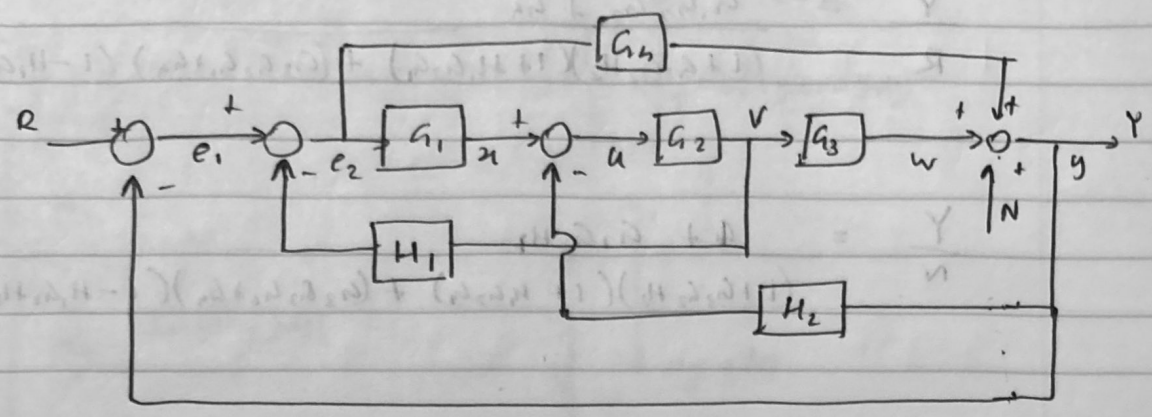

$e_1 = R - y$

$e_2 = e_1 - H_1 V \quad , \quad e_2 = R - y - H_1 V$

$u = x - H_2 y \qquad = R - Y - H_1 G_2 (G_1 e_2 - H_2 y)$

$x = G_1 e_2 \qquad e_2 (1 + H_1 G_1 G_2) = R + y (H_1 G_2 H_2 - 1)$

$V = G_2 u \qquad e_2 = \dfrac{R + y(H_1 H_2 G_2 - 1)}{(1 + H_1 G_1 G_2)}$

$w = G_3 V$

$y = w + G_4 e_2 + N$

$v = G_2 (G_1 e_2 - H_2 y)$

$w = G_3 G_2 (G_1 e_2 - H_2 y)$

$y = G_3 G_2 (G_1 e_2 - H_2 y) + G_4 e_2 + N$

$y (1 + H_2 G_3 G_2) = G_3 G_2 G_3 e_2 + G_4 e_2 + N$

$Y (1 + H_2 G_2 G_3) = (G_4 + G_1 G_2 G_3) \dfrac{R + Y(H_1 H_2 G_2 - 1)}{(1 + H_1 G_1 G_2)} + N$

$Y (1 + H_1 G_1 G_2)(1 + H_2 G_2 G_3) + (1 - H_1 H_2 G_2)(G_1 G_2 G_3 + G_4) = R (G_1 G_2 G_3 + G_4) + N (1 + H_1 G_1 G_2)$

No: Date: / /

$$\frac{Y}{R} = \frac{G_1G_2G_3 + G_4}{(1+G_3G_2H_2)(1+H_1G_2G_1) + (G_3G_2G_1+G_4)(1-H_1G_2H_2)}$$

$$\frac{Y}{N} = \frac{0 + G_1G_2H_2}{(1+G_3G_2H_2)(1+H_1G_2G_1) + (G_3G_2G_1+G_4)(1-H_1G_2H_2)}$$