Block: MAIN
Author: KEERTHI P.E.D.S.
Created: 03/08/2026 12:13:13 pm
Last Modified: 03/14/2026 02:58:29 pm

Symbol	Var Type	Data Type	Comment
	TEMP		
	TEMP		
	TEMP		
	TEMP		

PROGRAM COMMENTS

Network 1 Network Title

Network Comment

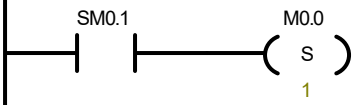

Network 2

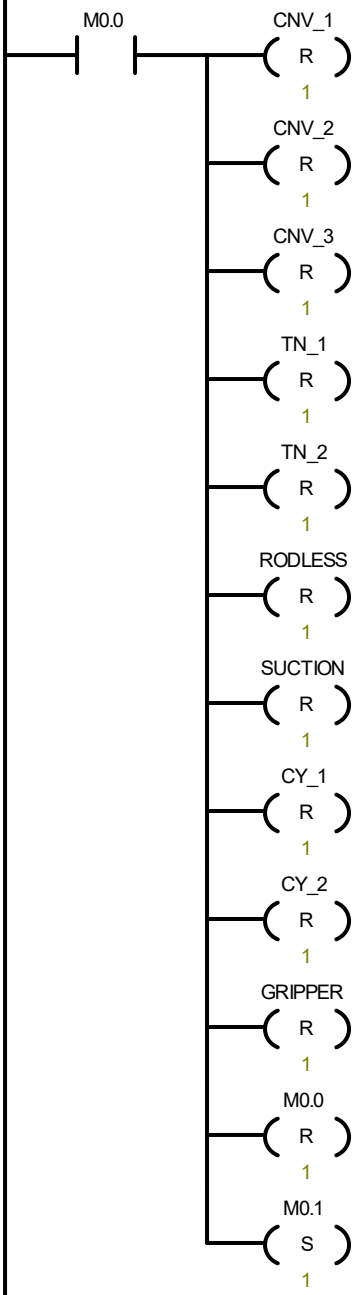

Symbol	Address	Comment
CNV_1	Q1.0	
CNV_2	Q1.2	
CNV_3	Q1.4	
CY_1	Q0.3	
CY_2	Q0.4	
GRIPPER	Q0.5	
RODLESS	Q0.0	
SUCTION	Q0.2	
TN_1	Q0.1	
TN_2	Q0.6	

Network 3

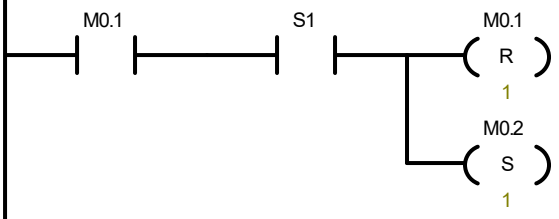

Symbol	Address	Comment
S1	I0.0	

Network 4

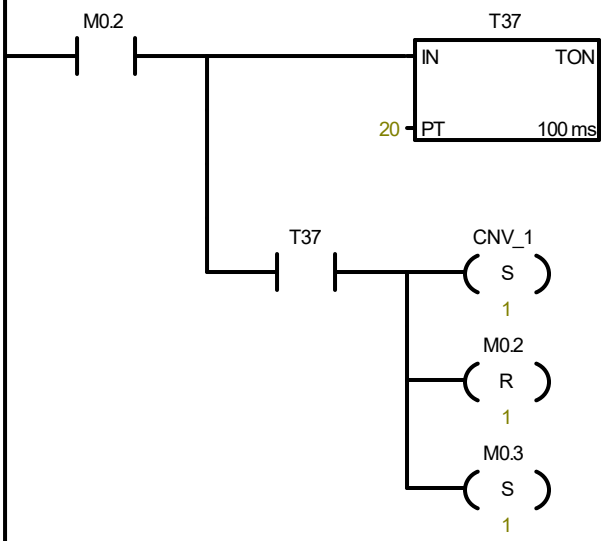

Symbol	Address	Comment
CNV_1	Q1.0	

Network 5

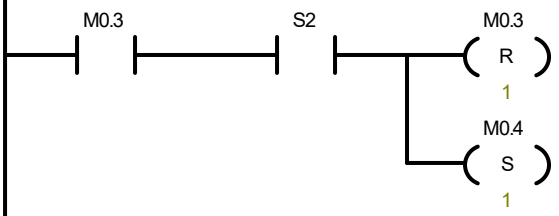

Symbol	Address	Comment
S2	I0.1	

Network 6

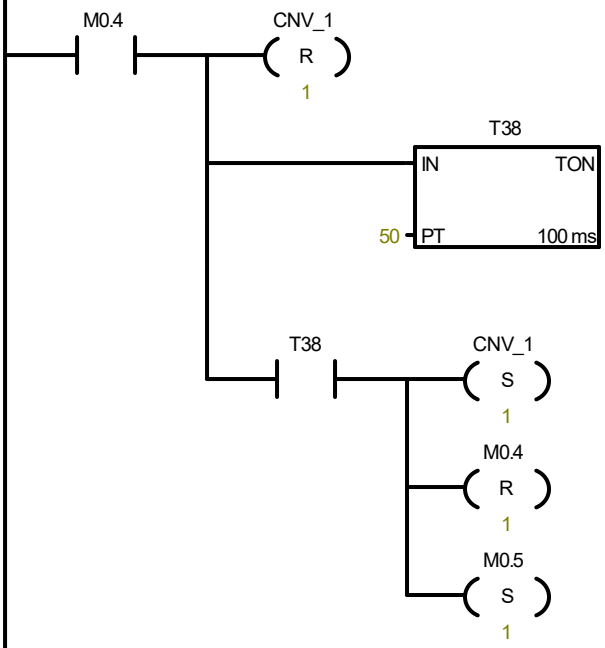

Symbol	Address	Comment
CNV_1	Q1.0	

Network 7

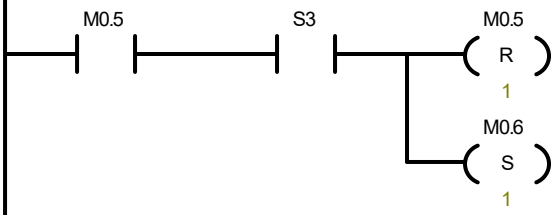

Symbol	Address	Comment
S3	I0.2	

Network 8

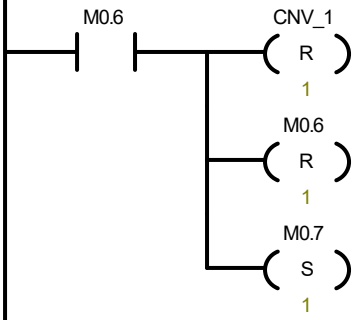

Symbol	Address	Comment
CNV_1	Q1.0	

Network 9

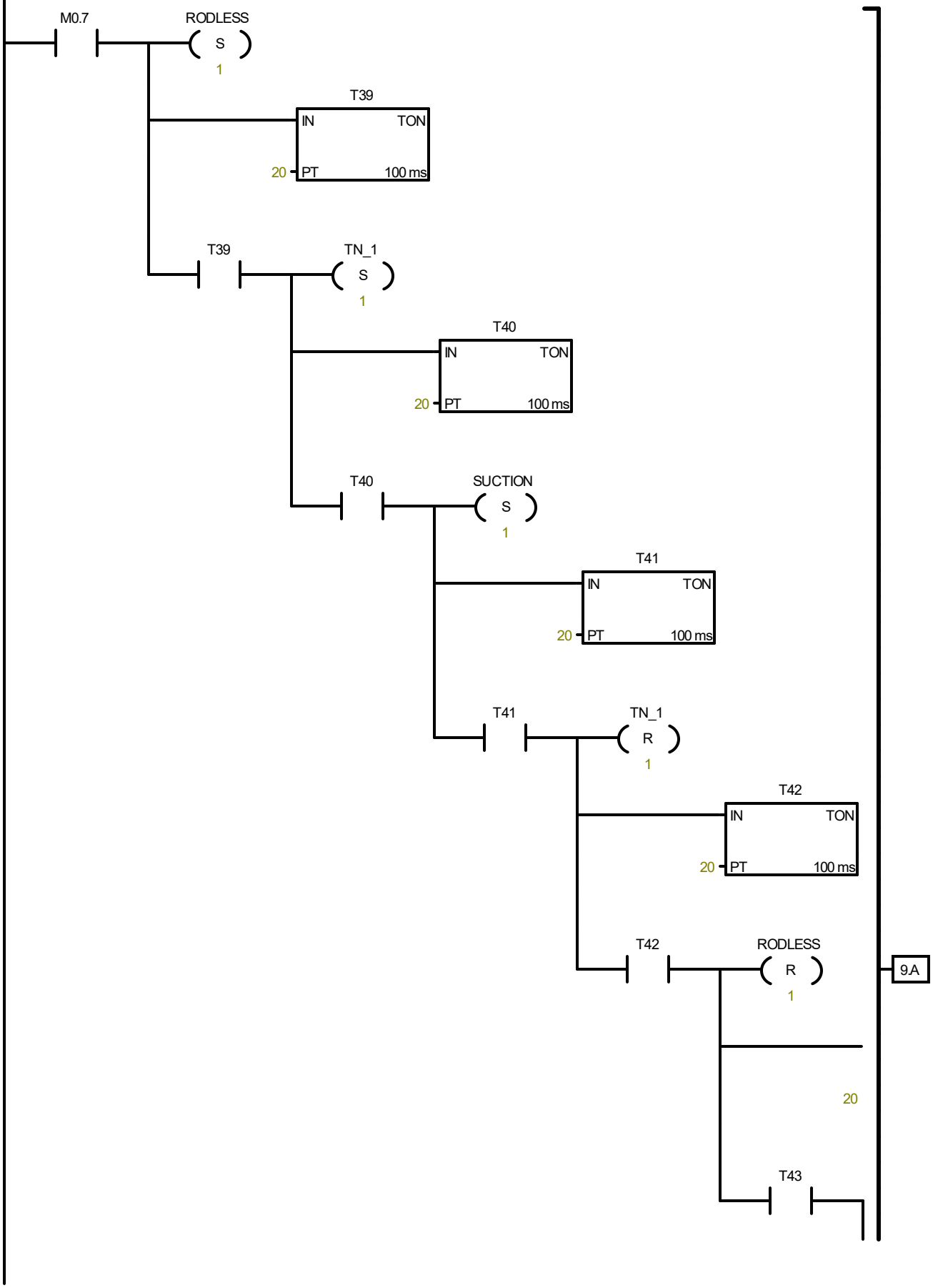
M0.7
RODLESS
S
1
T39
IN
TON
20
PT
100 ms
T39
TN_1
S
1
T40
IN
TON
20
PT
100 ms
T40
SUCTION
S
1
T41
IN
TON
20
PT
100 ms
T41
TN_1
R
1
T42
IN
TON
20
PT
100 ms
T42
RODLESS
R
1
9.A
20
T43

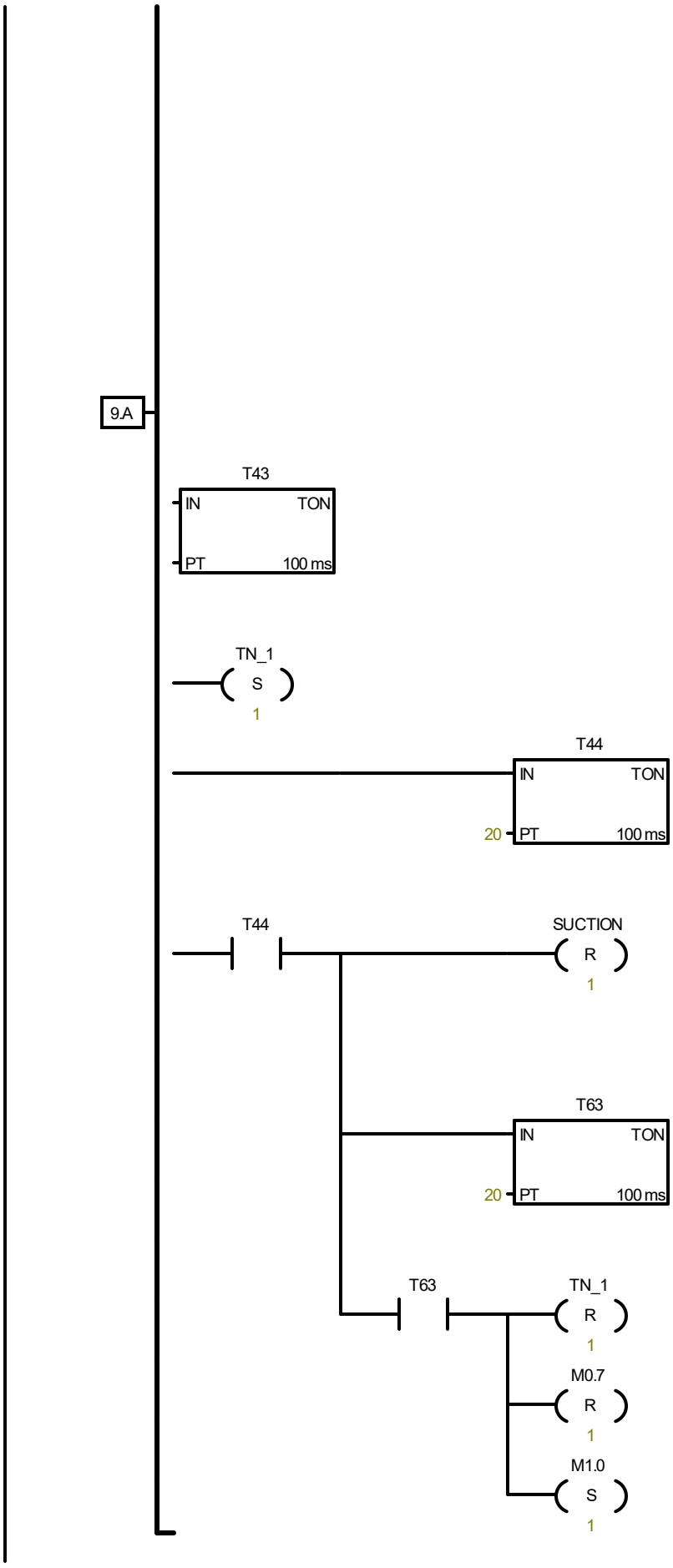
9.A
T43
IN
TON
PT
100 ms
TN_1
S
1
T44
IN
TON
20
PT
100 ms
T44
SUCTION
R
1
T63
IN
TON
20
PT
100 ms
T63
TN_1
R
1
M0.7
R
1
M1.0
S
1

Symbol	Address	Comment
RODLESS	Q0.0	
SUCTION	Q0.2	
TN_1	Q0.1	

Network 10

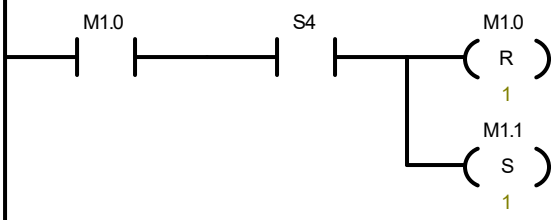

Symbol	Address	Comment
S4	I0.3	

Network 11

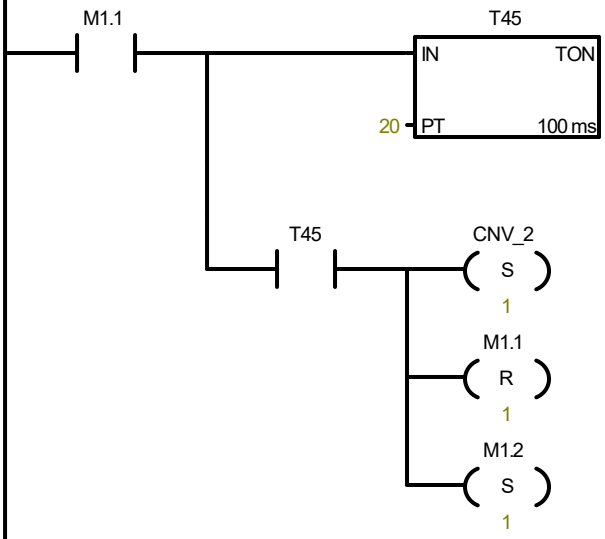

Symbol	Address	Comment
CNV_2	Q1.2	

Network 12

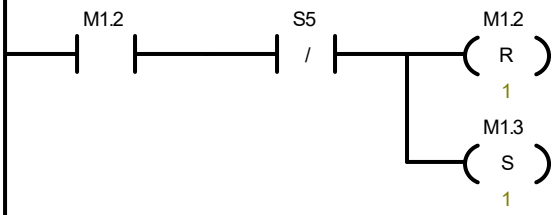

Symbol	Address	Comment
S5	I0.4	

Network 13

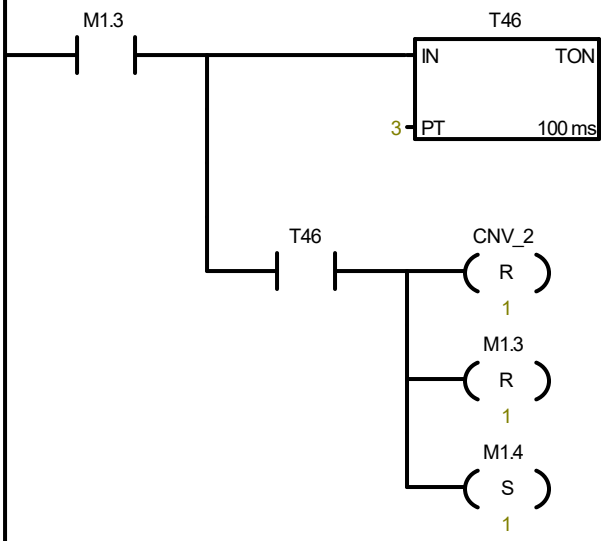

Symbol	Address	Comment
CNV_2	Q1.2	

Network 14

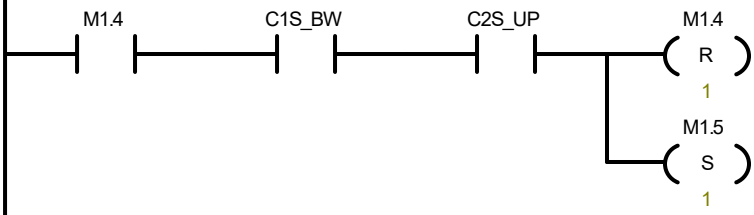

Symbol	Address	Comment
C1S_BW	I1.2	CY01 S1
C2S_UP	I1.0	CY02 S1

Network 15

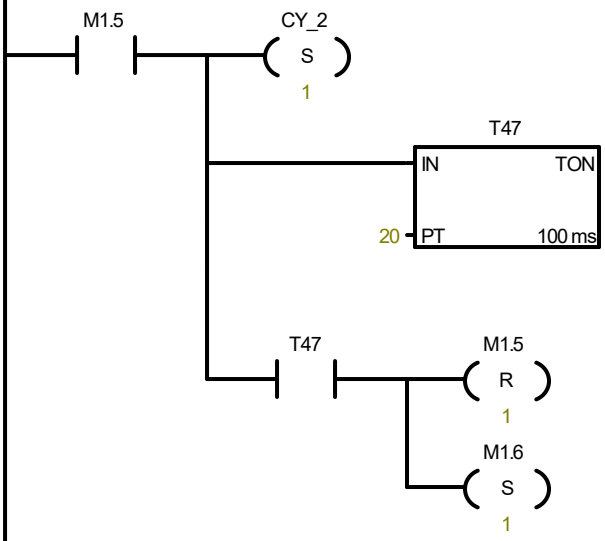

Symbol	Address	Comment
CY_2	Q0.4	

Network 16

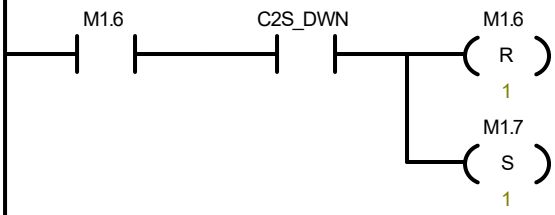

Symbol	Address	Comment
C2S_DWN	I1.3	CY02 S2

Network 17

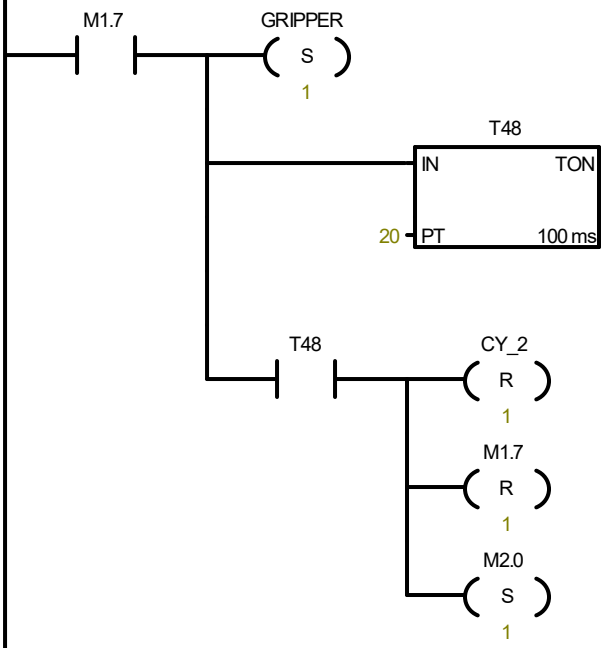

Symbol	Address	Comment
CY_2	Q0.4	
GRIPPER	Q0.5	

Network 18

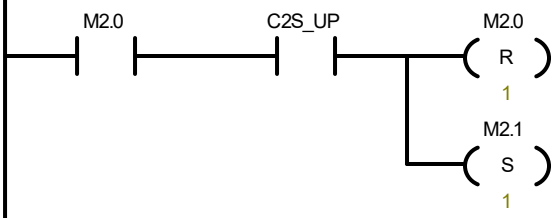

Symbol	Address	Comment
C2S_UP	I1.0	CY02 S1

Network 19

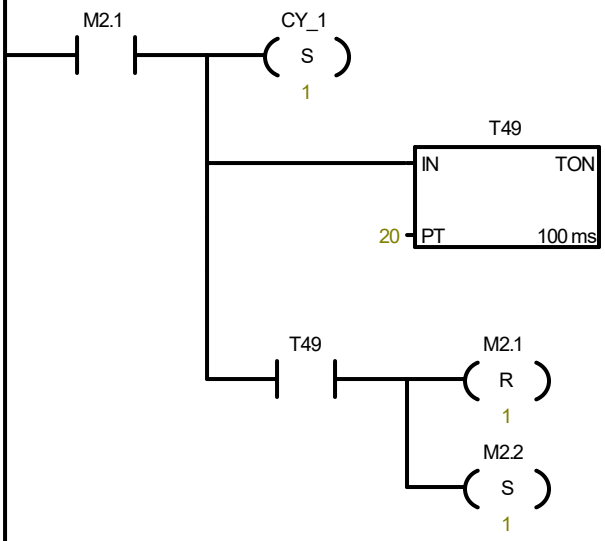

Symbol	Address	Comment
CY_1	Q0.3	

Network 20

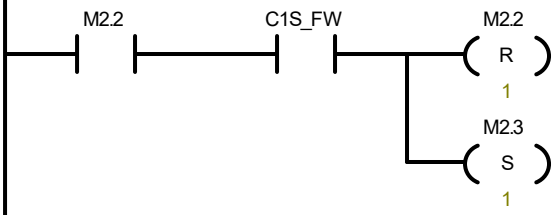

Symbol	Address	Comment
C1S_FW	I1.1	CY01 S2

Network 21

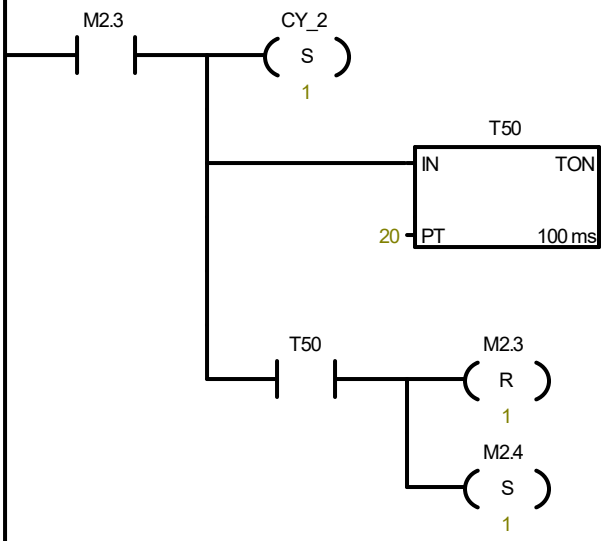

Symbol	Address	Comment
CY_2	Q0.4	

Network 22

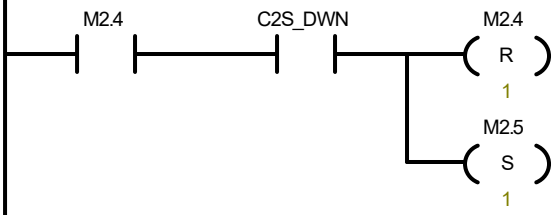

Symbol	Address	Comment
C2S_DWN	I1.3	CY02 S2

Network 23

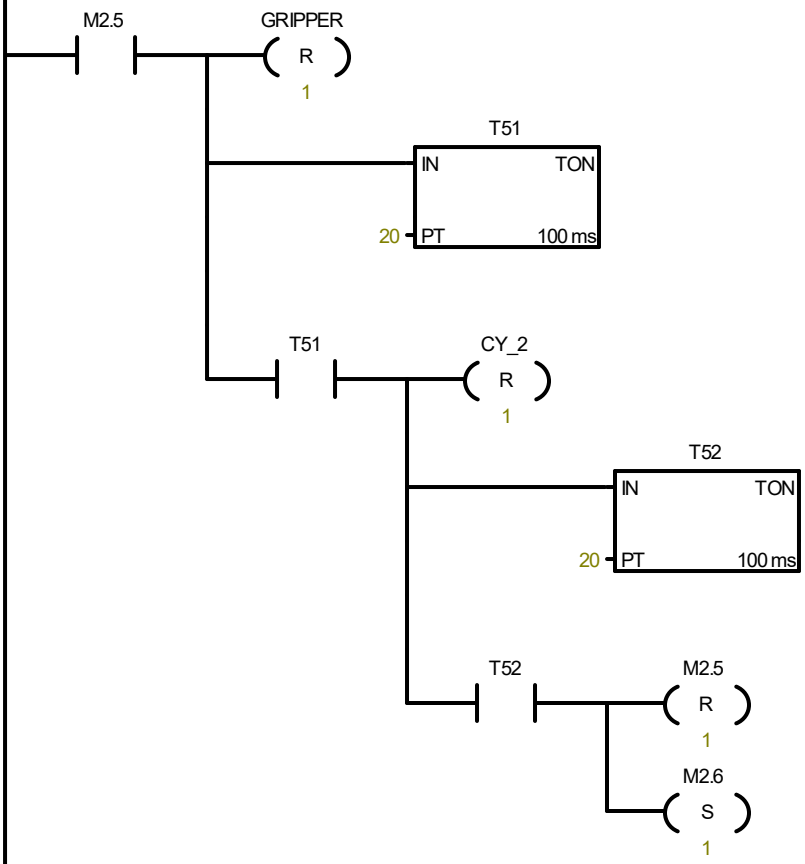

Symbol	Address	Comment
CY_2	Q0.4	
GRIPPER	Q0.5	

Network 24

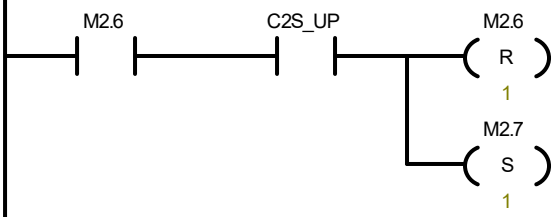

Symbol	Address	Comment
C2S_UP	I1.0	CY02 S1

Network 25

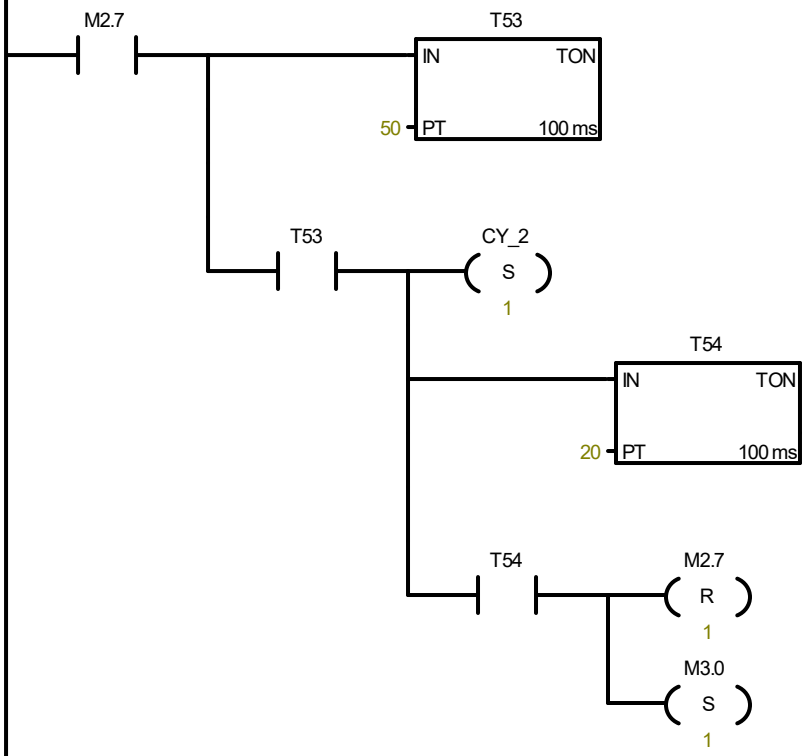

Symbol	Address	Comment
CY_2	Q0.4	

Network 26

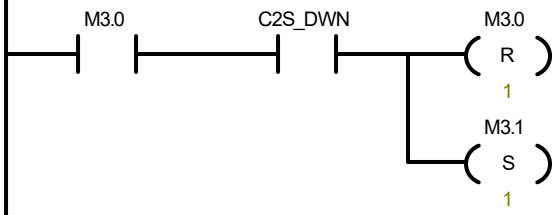

Symbol	Address	Comment
C2S_DWN	I1.3	CY02 S2

Network 27

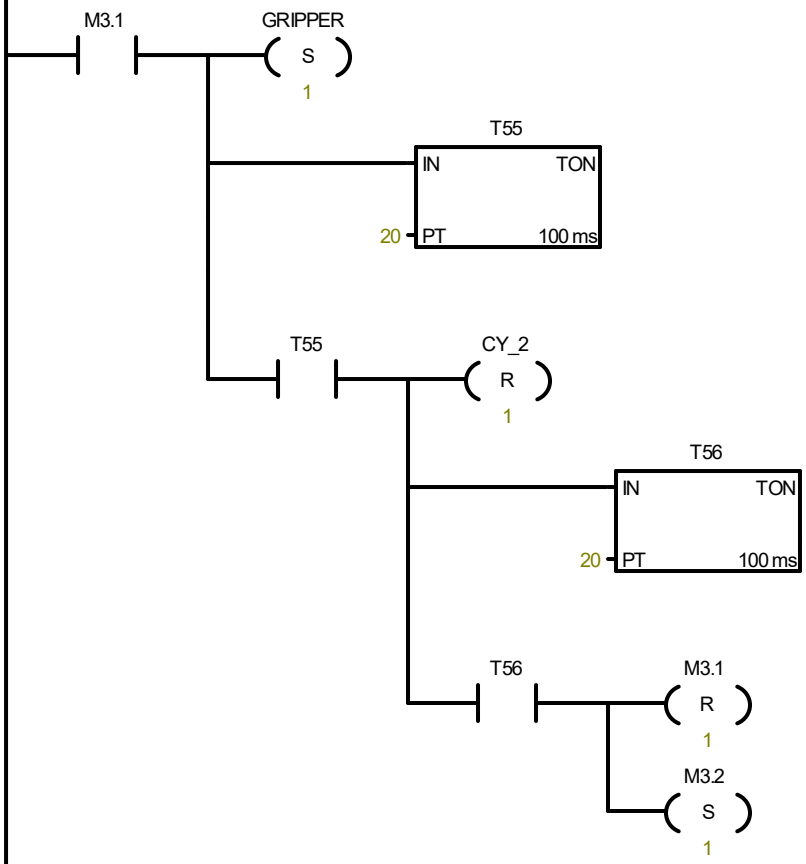

Symbol	Address	Comment
CY_2	Q0.4	
GRIPPER	Q0.5	

Network 28

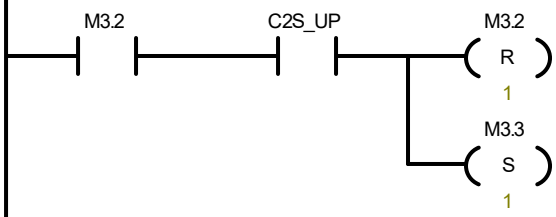

Symbol	Address	Comment
C2S_UP	I1.0	CY02 S1

Network 29

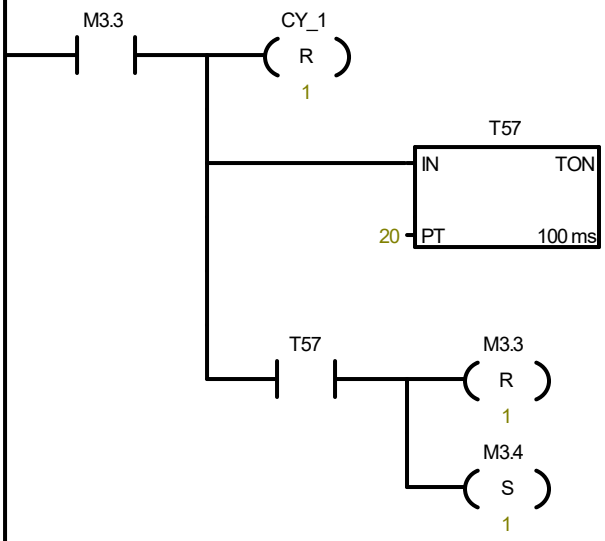

Symbol	Address	Comment
CY_1	Q0.3	

Network 30

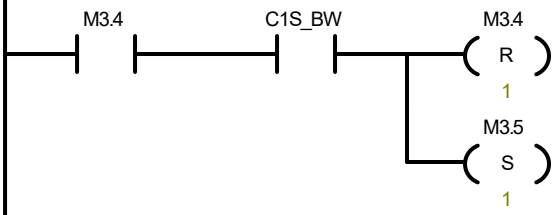

Symbol	Address	Comment
C1S_BW	I1.2	CY01 S1

Network 31

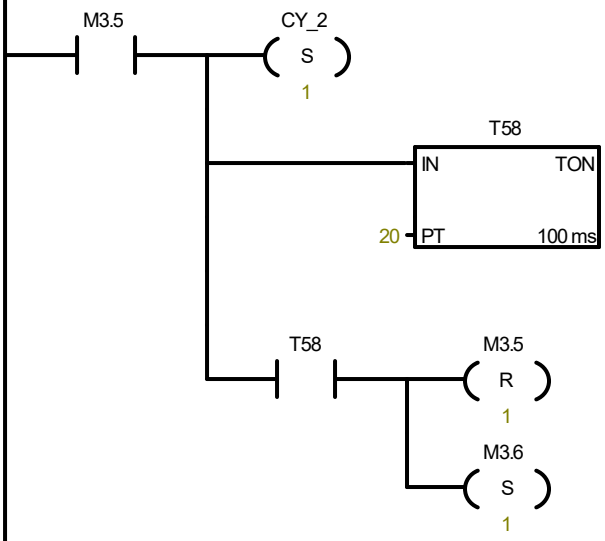

Symbol	Address	Comment
CY_2	Q0.4	

Network 32

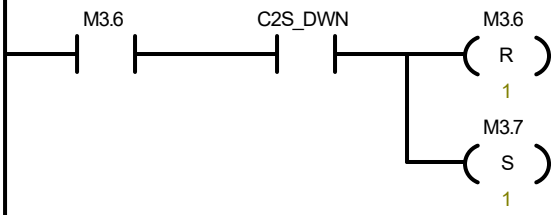

Symbol	Address	Comment
C2S_DWN	I1.3	CY02 S2

Network 33

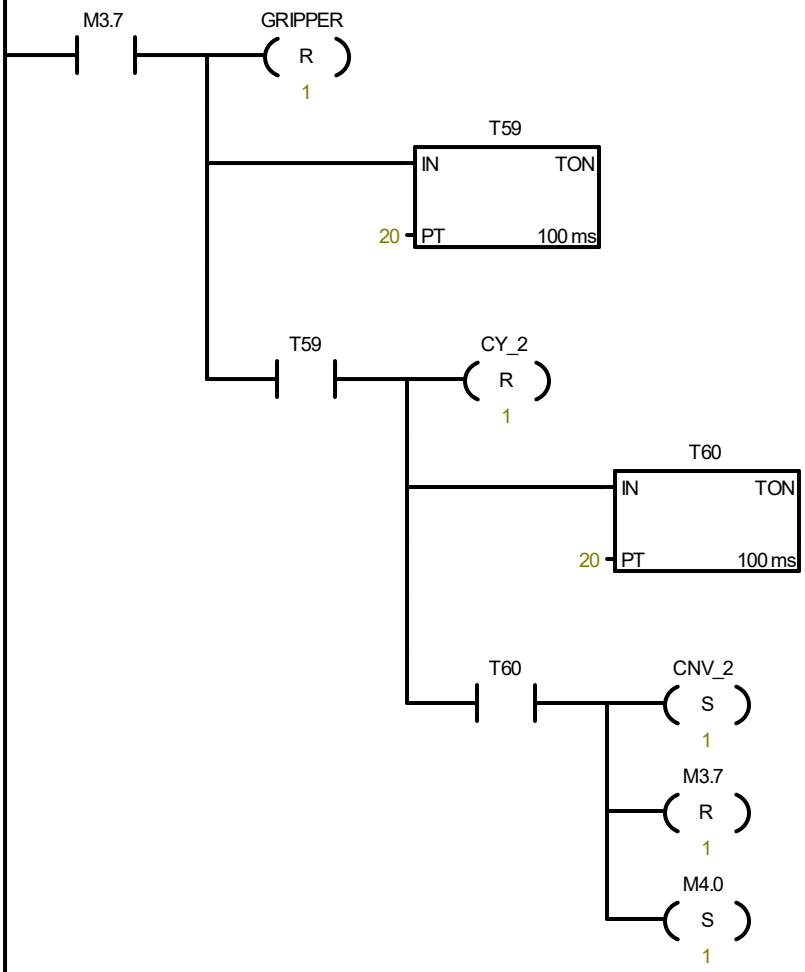

Symbol	Address	Comment
CNV_2	Q1.2	
CY_2	Q0.4	
GRIPPER	Q0.5	

Network 34

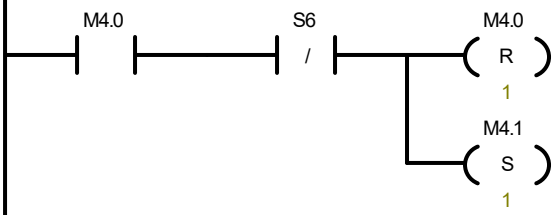

Symbol	Address	Comment
S6	I0.5	

Network 35

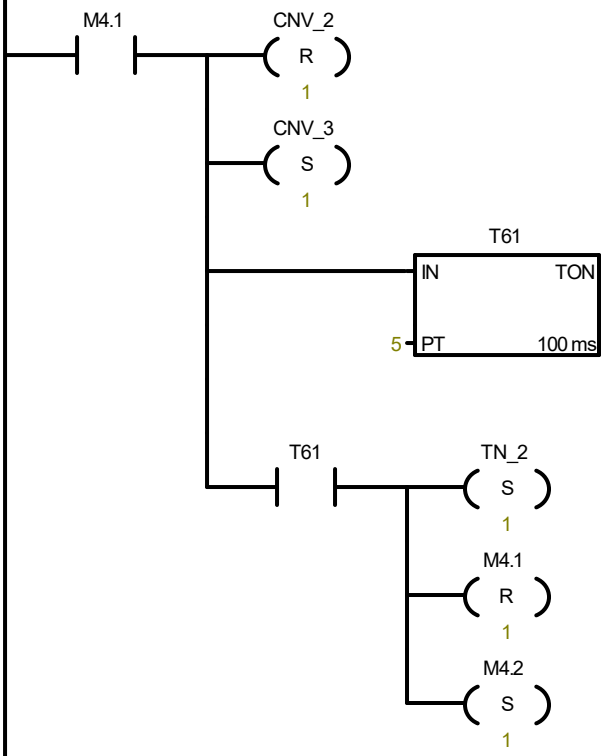

Symbol	Address	Comment
CNV_2	Q1.2	
CNV_3	Q1.4	
TN_2	Q0.6	

Network 36

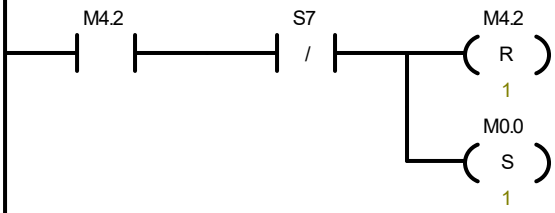

Symbol	Address	Comment
S7	I0.6	