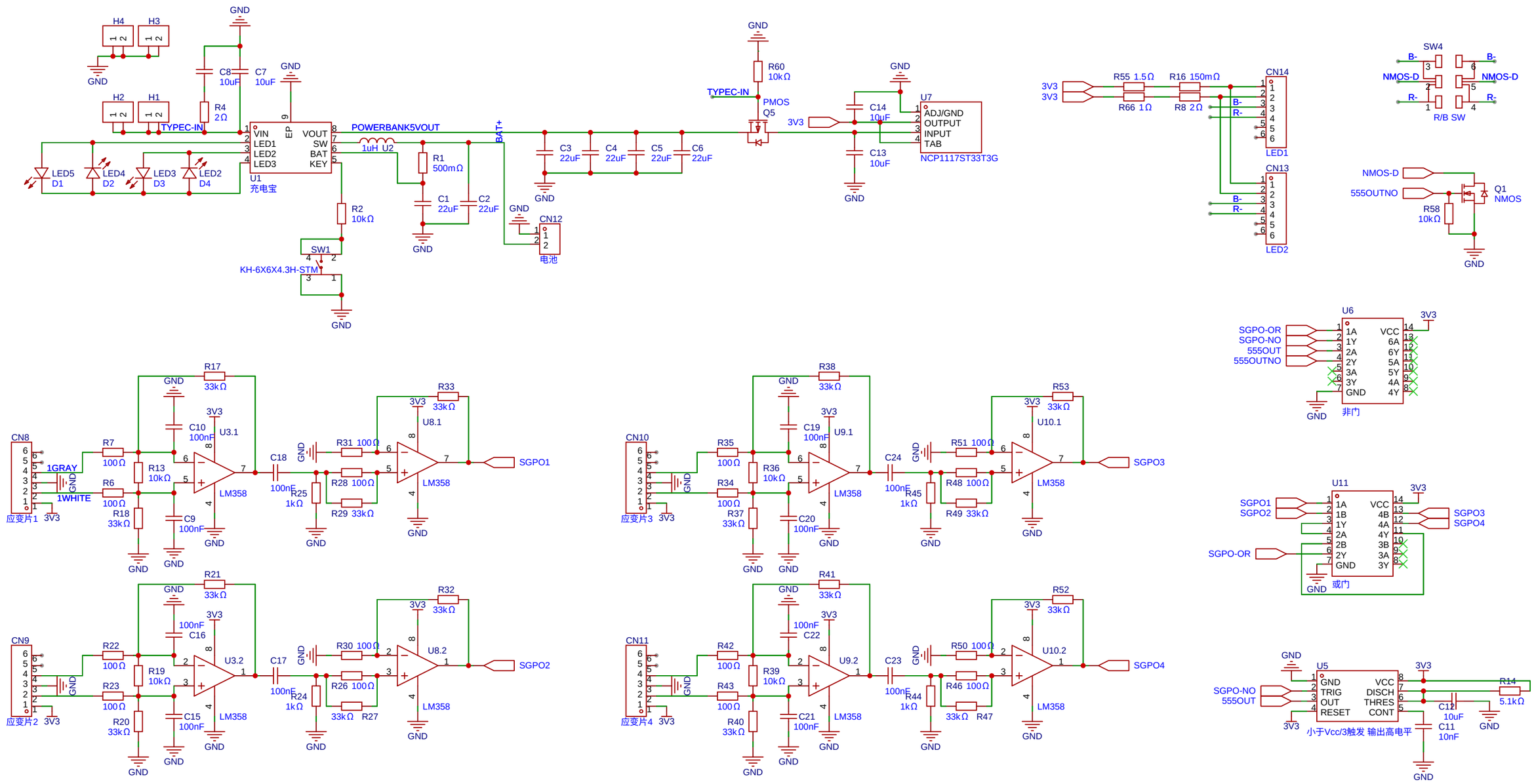

Schematic	Schematic12	Update Date	2023-05-16
		Create Date	2023-05-12
Page	P1	Part Number	
Drawed	LED		
Reviewed			
		VER	SIZE	PAGE 1 OF 1
嘉立创EDA		V1.0	A4	嘉立创EDA