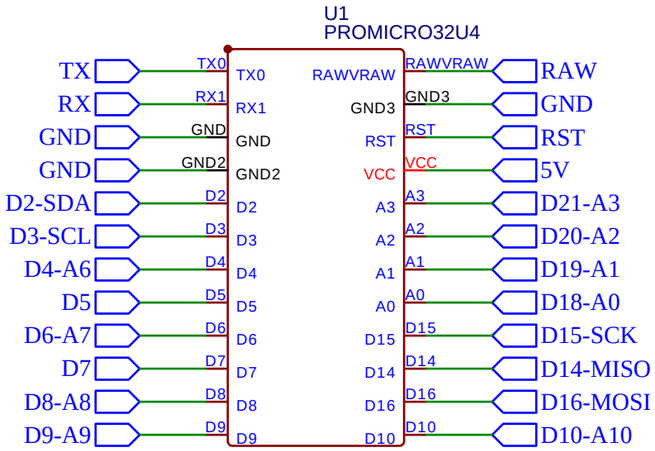

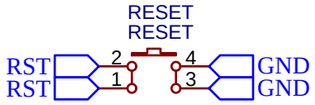

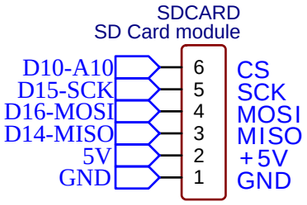

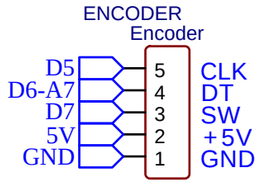

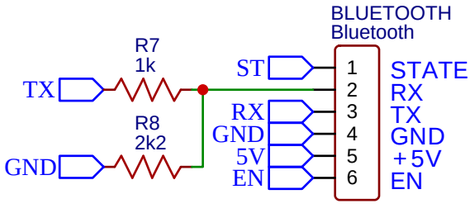

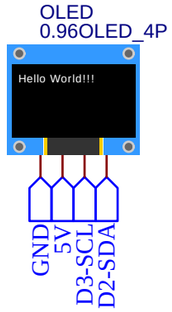

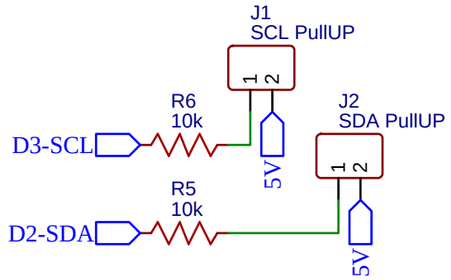

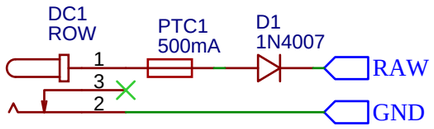

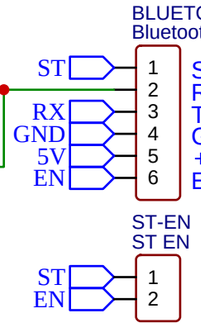

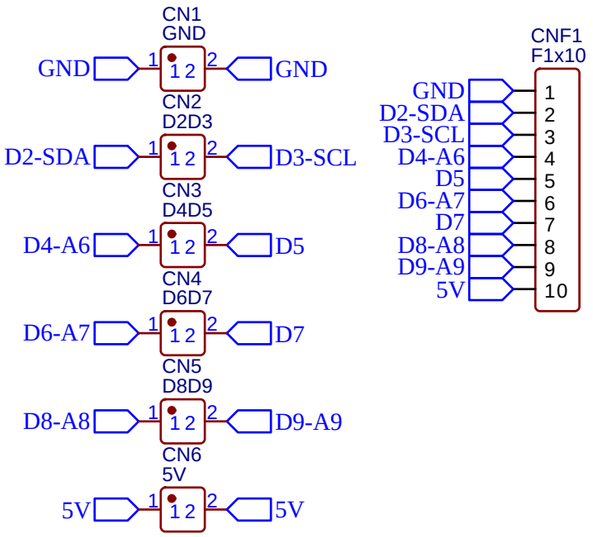

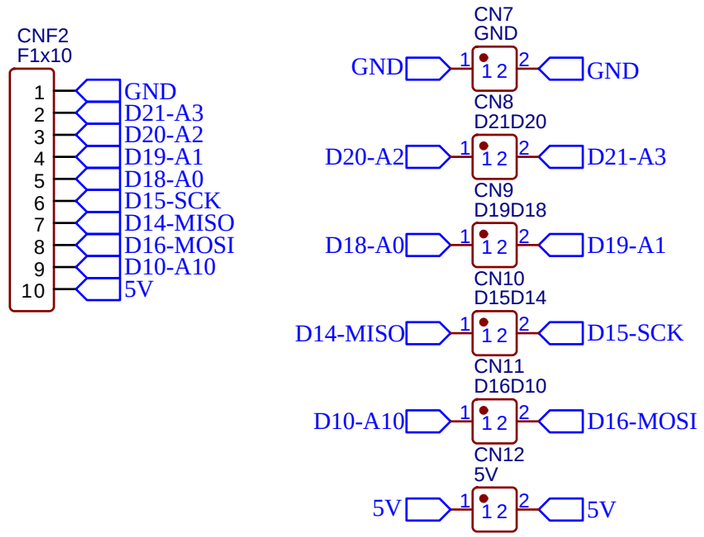

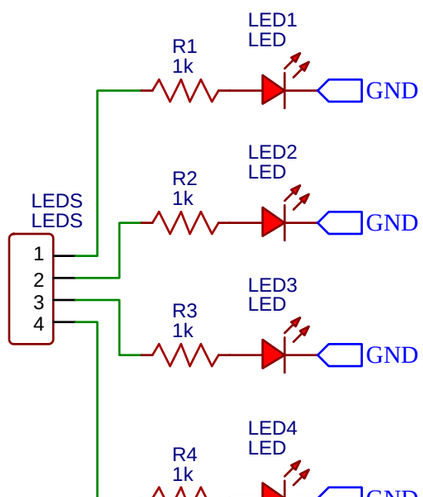

TITLE: Arduino Pro Micro Utility		REV: 1.2
EasyEDA	Company: Dino del Favero	Sheet: 1/1
	Date: 24/01/25	Drawn By: dino@mesina.net