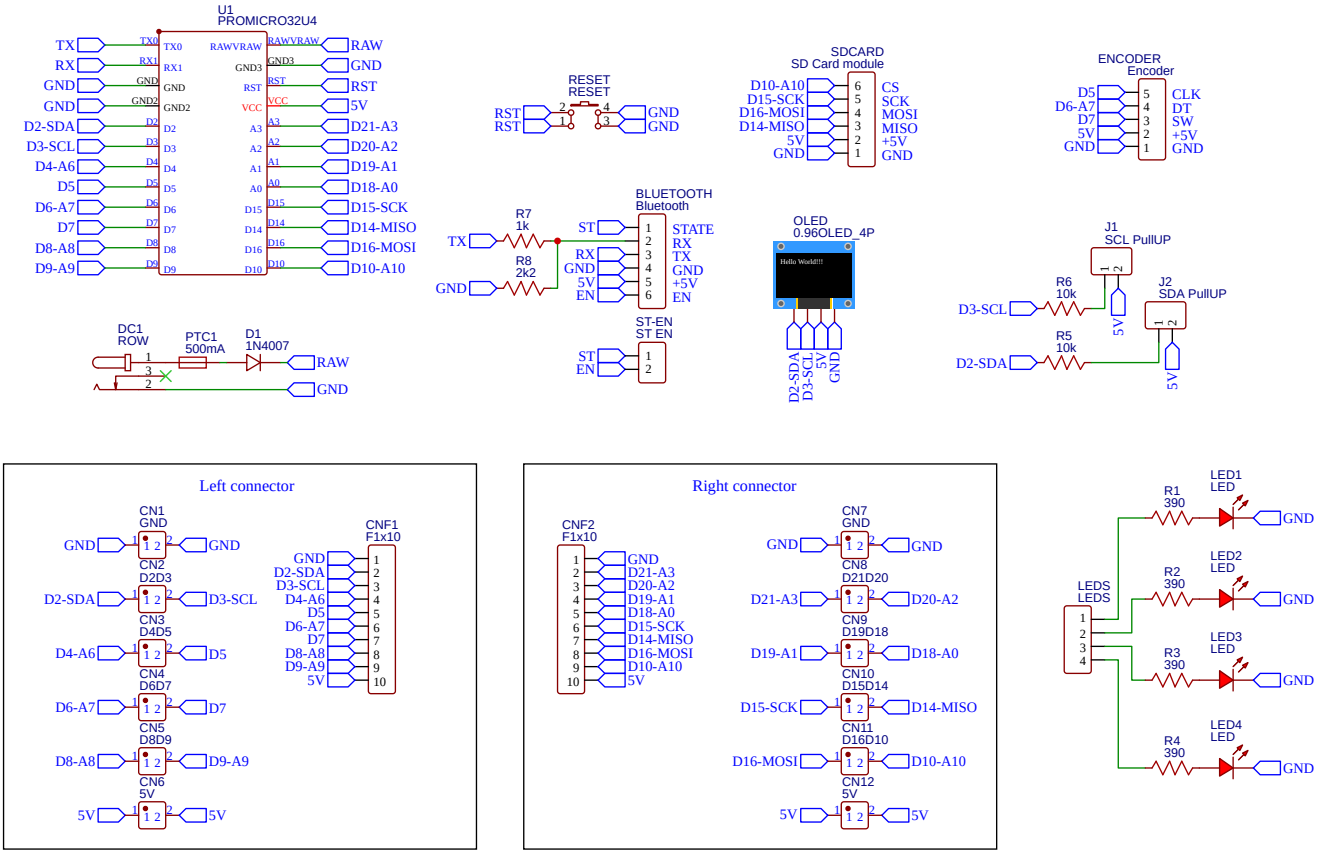

TITLE: Arduino Pro Micro Utility		REV: 1.0
EasyEDA	Company: Dino del Favero	Sheet: 1/1
	Date: 21/10/24 Drawn By: dino@mesina.net	