BME688 SENSOR I2C

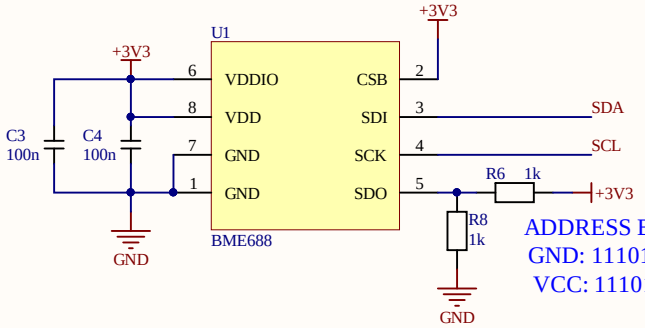

ADDRESS BIT SELECTION
GND: 1110110
VCC: 1110111

BMP390SENSOR I2C

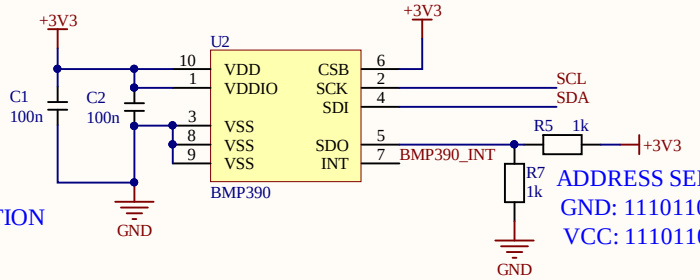

ADDRESS SELECTION
GND: 1110110
VCC: 1110110

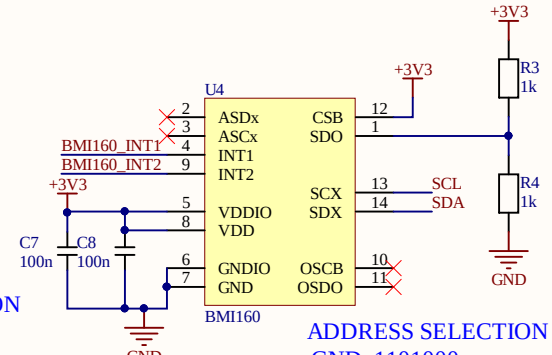

ADDRESS SELECTION
GND: 1101000
VCC: 1101001

SSCDRRV100MGSA3 SENSOR SPI

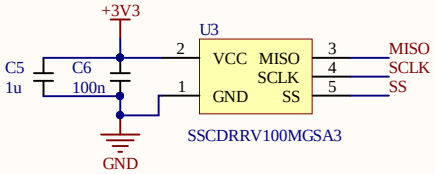

ZEPHYR 200

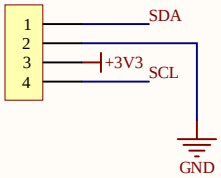

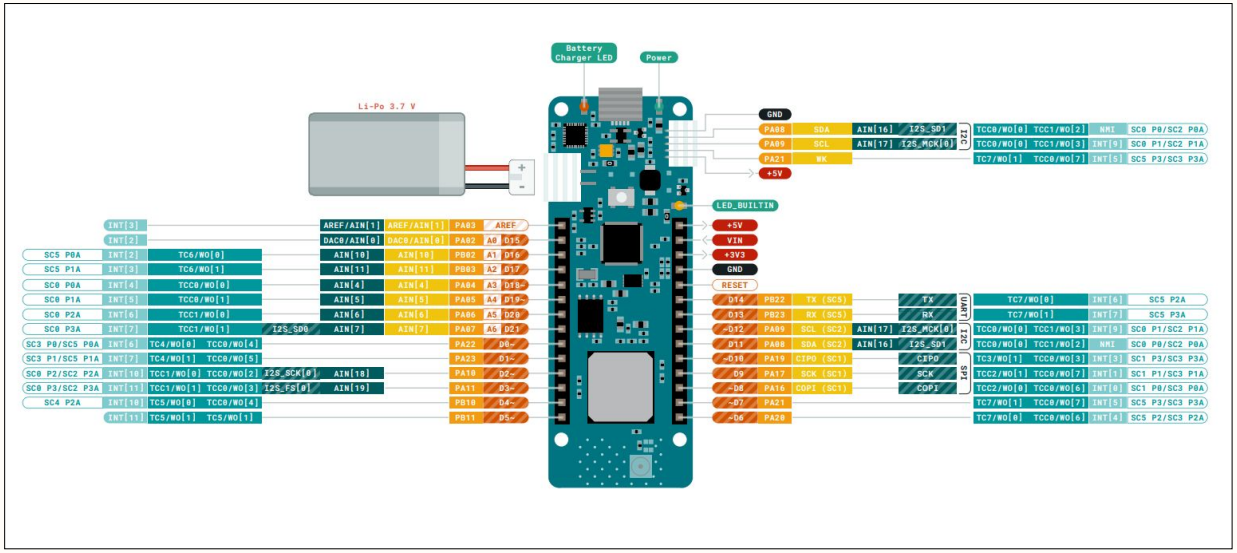

MKR WAN 1310

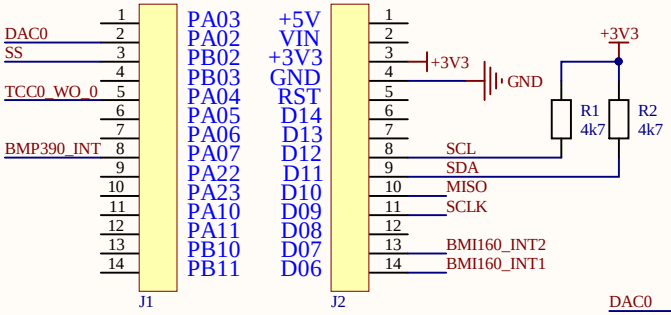

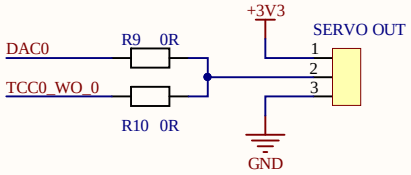

Title ...	Project SensorsBoard1.0.PrjPcb	www.red-electronics.pl ul. Świętojańska 39/9 44-100 Gliwice Poland VAT PL9372571488
	Revision: projectRevision	RED Electronics
Date: 3/3/2022 Time: 2:43:06 PM	Sheet of	

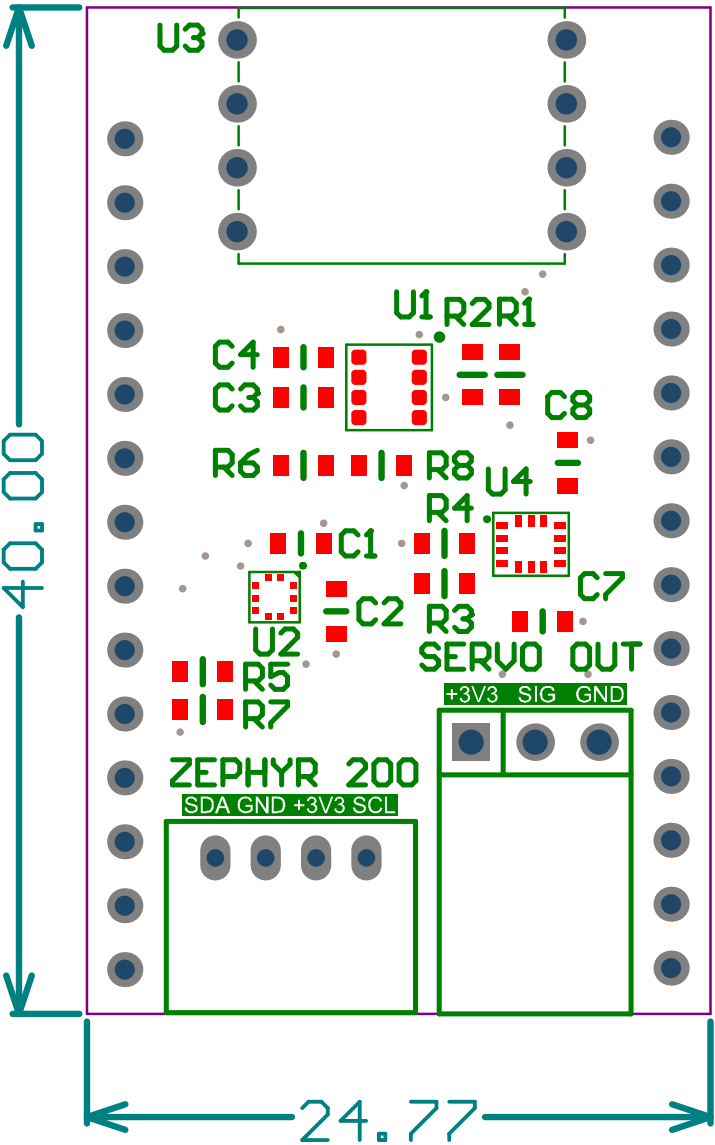
U3
U1
R2
R1
C4
C3
C8
R6
R8
U4
R4
C1
C7
C2
R3
U2
SERVO OUT
R5
R7
+3V3 SIG GND
ZEPHYR 200
SDA GND +3V3 SCL
40.00
24.77

RED Electronics
v1 1.0
Breakboard
J1
J2
R9
R10
C5
C6
40.00
24.77