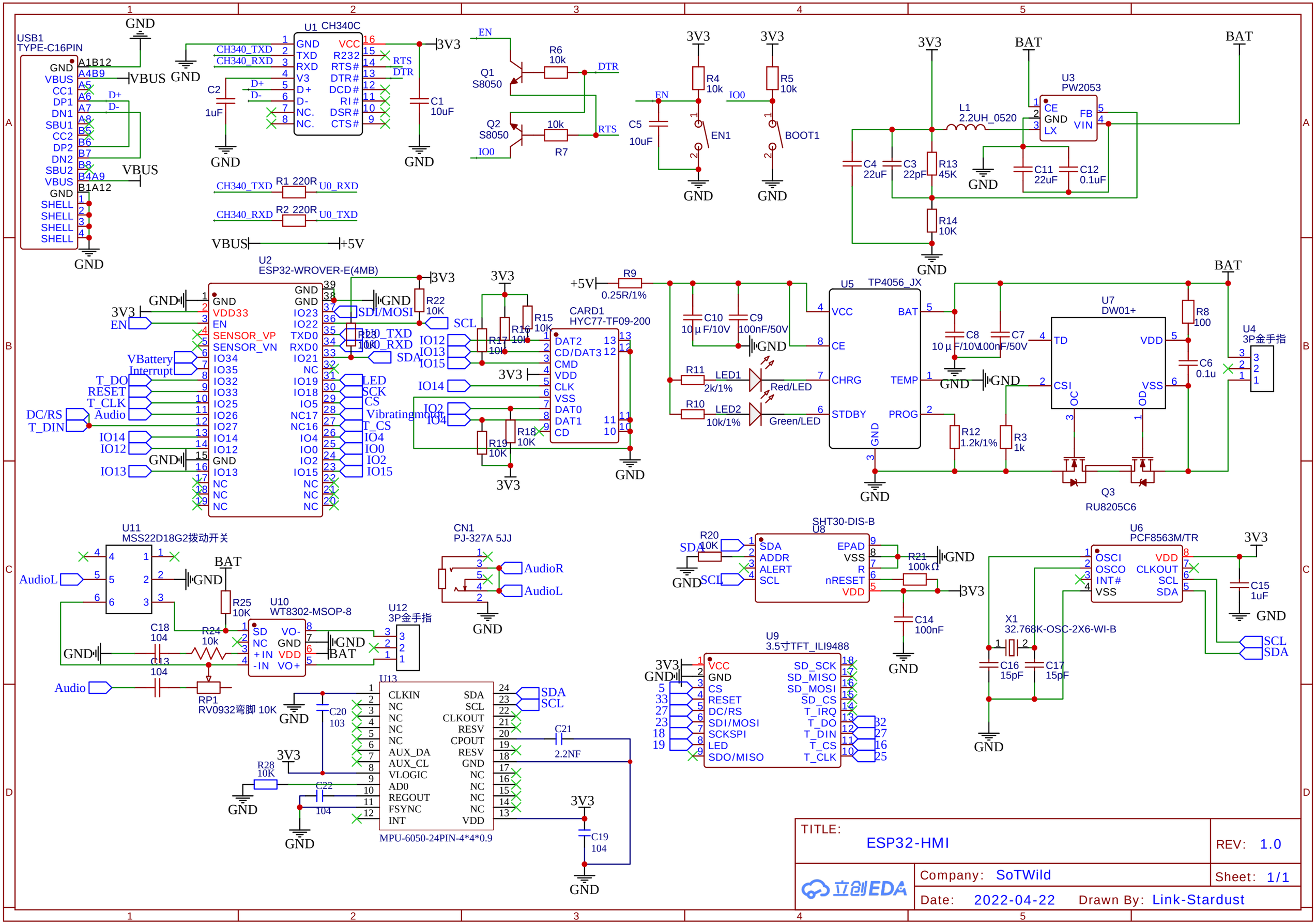

TITLE: ESP32-HMI

REV: 1.0

Company: SoTWild

Sheet: 1/1

Date: 2022-04-22

Drawn By: Link-Stardust

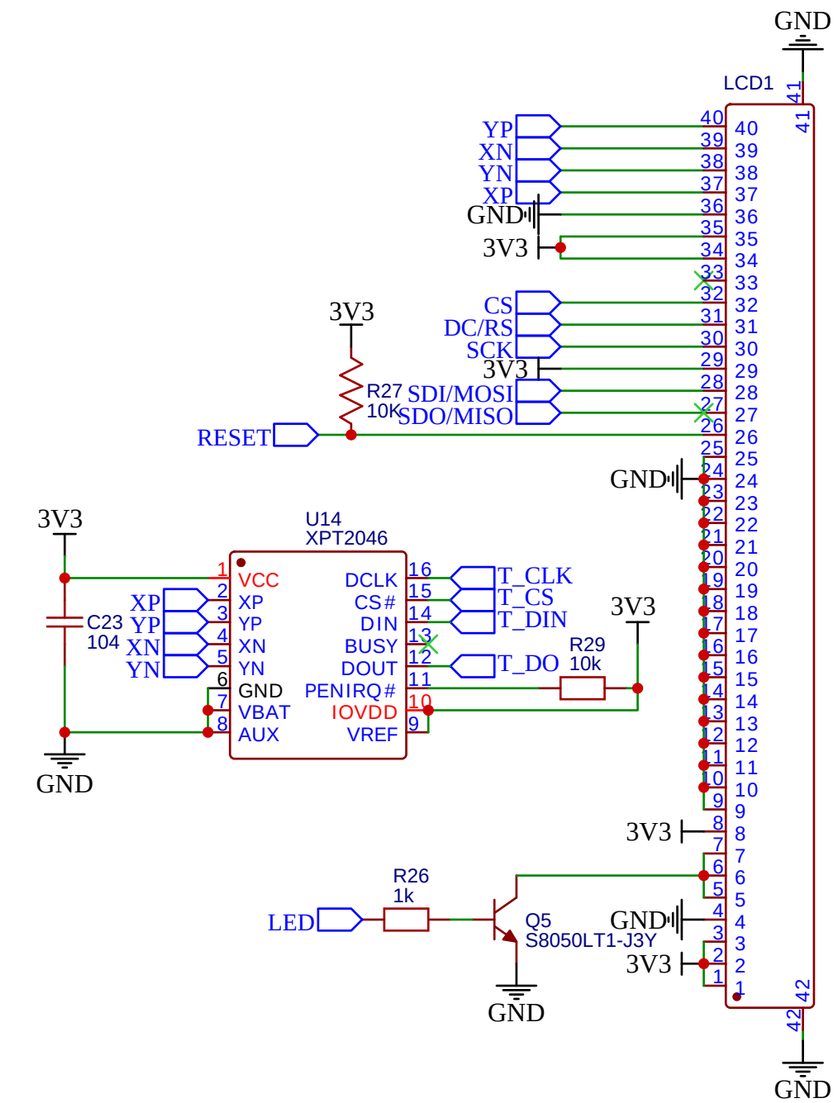

TITLE: Sheet_2		REV: 1.0
嘉立创EDA	Company: Your Company	Sheet: 1/1
	Date: 2022-07-26 Drawn By: Link-Stardust	