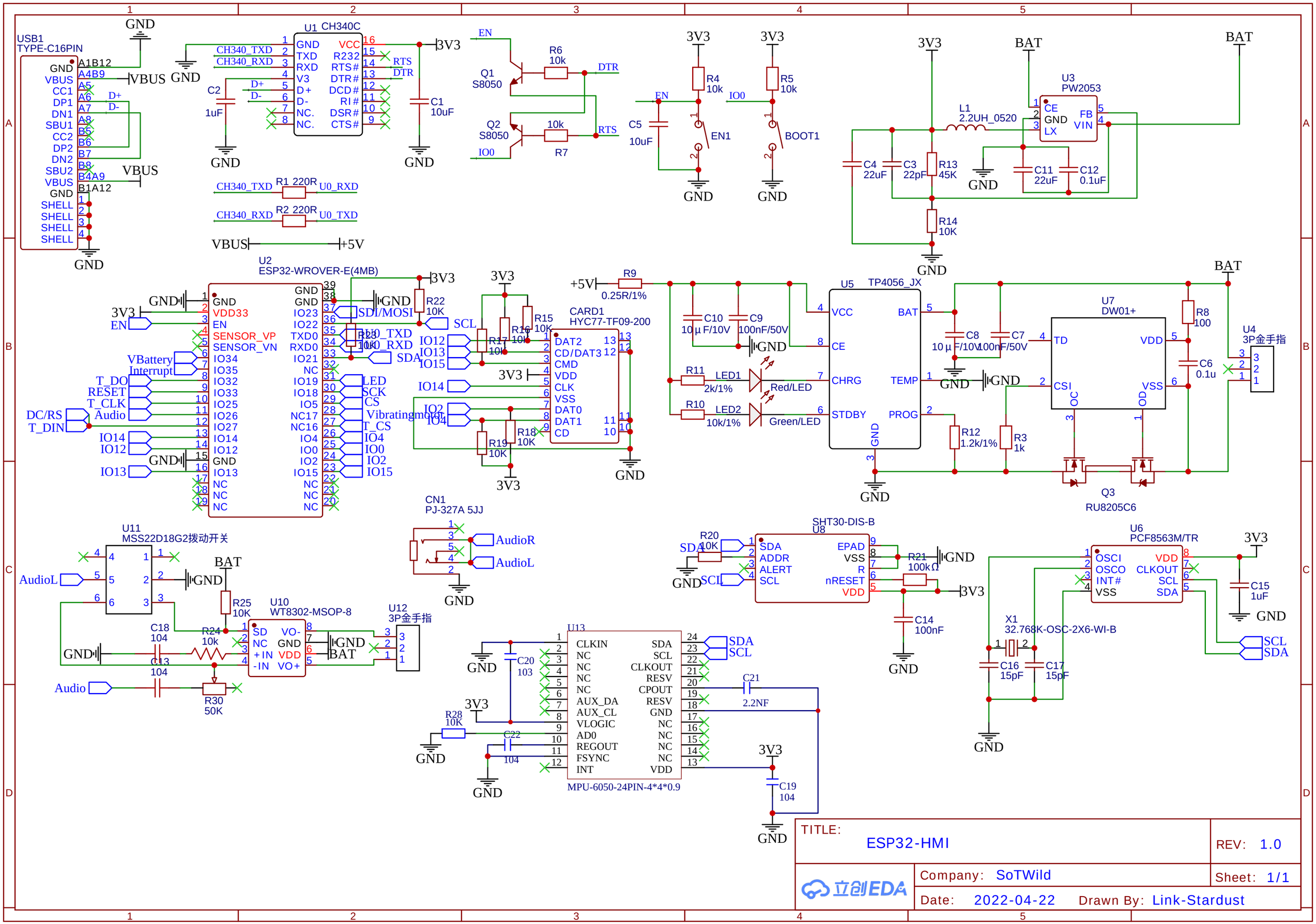
USB1
TYPE-C16PIN
U1 CH340C
U2
ESP32-WROVER-E(4MB)
U3
PW2053
U4
3P金手指
U5 TP4056_JX
U6
PCF8563M/TR
U7
DW01+
U8
SHT30-DIS-B
U10
WT8302-MSOP-8
U11
MSS22D18G2拨动开关
U12
3P金手指
U13
MPU-6050-24PIN-4*4*0.9
CARD1
HYC77-TF09-200
CN1
PJ-327A 5JJ
Q1
S8050
Q2
S8050
Q3
RU8205C6
X1
32.768K-OSC-2X6-WI-B
L1
2.2UH_0520
R1 220R
R2 220R
R9
0.25R/1%
LED1
Red/LED
LED2
Green/LED
GND
3V3
BAT
VBUS
+5V
EN
IO0
DTR
RTS
SDA
SCL
AudioL
AudioR
Audio
Vibratingmotor
VBattery
Interrupt
T_DO
RESET
T_CLK
DC/RS
T_DIN
TITLE:
ESP32-HMI
REV: 1.0
Company: SoTWild
Sheet: 1/1
Date: 2022-04-22
Drawn By: Link-Stardust
立创EDA

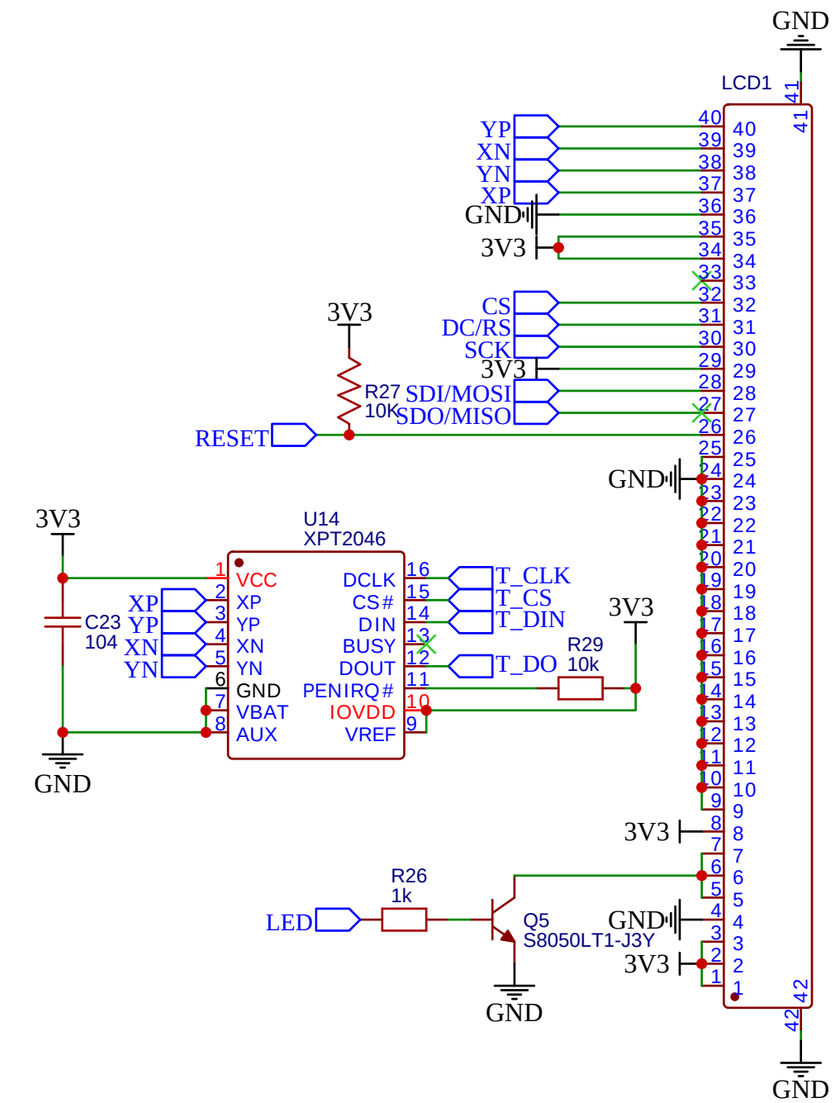

TITLE: Sheet_2		REV: 1.0
嘉立创EDA	Company: Your Company	Sheet: 1/1
	Date: 2022-07-26 Drawn By: Link-Stardust	